GREENVILLE TRANSPORTATION ACTIVITY CENTER

600 SOUTH PITT ST.
GREENVILLE, NC 27834

ISSUED FOR CONSTRUCTION: MAY 10, 2016

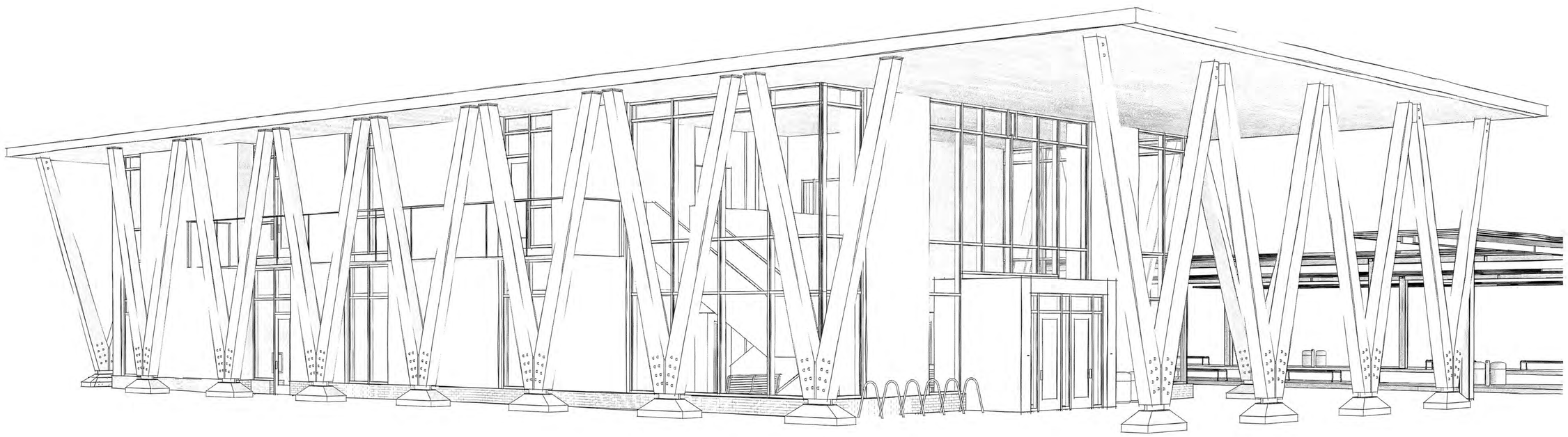

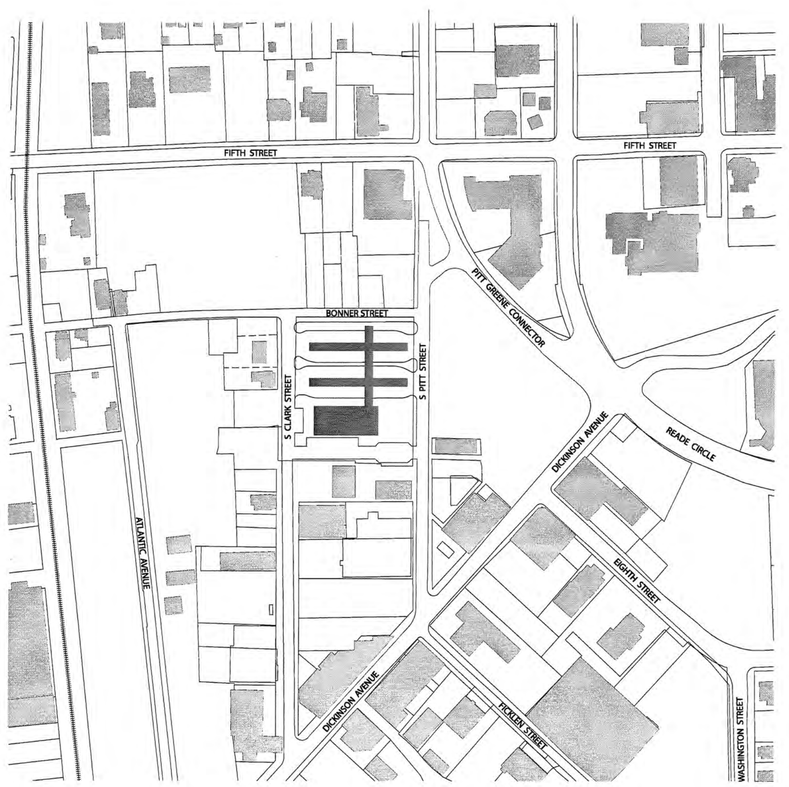

2 VICINITY MAP
G-000

Greenville
NORTH CAROLINA

Greenville
NORTH CAROLINA

JACOBS
333 Fayetteville Street, Suite 1100
Raleigh, NC 27601
PH: 919-334-3100 FX: 919-334-3122 www.jacobs.com
North Carolina Engineering Firm License No. F-287
North Carolina Architectural Firm Reg. No. 50757

AYERS SAINT GROSS

Consultants:

ARK Consulting Group, PLLC

Coaly Design
Landscape Architecture + Land Planning

Seals:

JOHN A. STEVERMER, NC LICENSE NO. 5858

General Notes:

Project Client:
CITY OF GREENVILLE

GREENVILLE
TRANSPORTATION
ACTIVITY CENTER
600 S. Pitt Street, Greenville, NC

Number	Description	Date
0	IFC	05-10-2016

Key Plan: Project North

CAD File:
Project No.: L3005900
Copyright: 2015 Jacobs Engineering Group

Drawing Sheet Title:
COVER SHEET

Drawing Sheet Number:
G-000

Owner's Drawing Sheet No.:

Owner:

City of Greenville

1500 Beatty St. Greenville, NC 27834
PH: (252) 329-4521

Architect:

JACOBS

333 Fayetteville St., Raleigh NC 27601
PH: 919-334-3100 FX: 919-334-3122 www.jacobs.com

Associate Architect:

AYERS SAINT GROSS

1100 First St., NE, Suite 800
Washington, DC 20002
PH: 202-628-1033 FX: 202-628-1034 www.asg-architects.com

Interior Designer:

JACOBS

333 Fayetteville St., Raleigh NC 27601
PH: 919-334-3100 FX: 919-334-3122 www.jacobs.com

Structural Engineer:

JACOBS

111 Corning Rd. Suite 200, Cary, NC, 27518
PH: 919-859-9954 FX: 215-569-5963 www.jacobs.com

Mechanical, Electrical, Plumbing, FP Engineer

JACOBS

333 Fayetteville St., Raleigh NC 27601
PH: 919-334-3100 FX: 919-334-3122 www.jacobs.com

Security & A.V.

JACOBS

333 Fayetteville St., Raleigh NC 27601
PH: 919-334-3100 FX: 919-334-3122 www.jacobs.com

Landscape Consultant:

Coaly Design

300-200 Parham Street, Suite G, Raleigh, NC 27601
PH: 919-539-0012 www.coalydesign.com

Civil Consultant:

ARK Consulting Group, PLLC

3280 Charles Blvd. Suite B, Greenville, NC 27858
PH: 252-558-0888 FX: 252-258-0734 www.arkconsultinggroup.com

DRAWING LIST

SHEET NUMBER	DRAWING TITLE	IFC - 05/04/2016
00 GENERAL		
G-000	COVER SHEET	X
G-001	DRAWING LIST	X
G-002	CODE SUMMARY SHEET	X
G-003	RATED ASSEMBLIES & UL DETAILS	X
G-004	TYPICAL ACCESSIBILITY NOTES	X
G-110	LIFE SAFETY PLANS	X
01 SITE		
V-1	BOUNDARY & TOPOGRAPHIC SURVEY	X
V-2	BOUNDARY & TOPOGRAPHIC SURVEY	X
V-3	BOUNDARY & TOPOGRAPHIC SURVEY	X
C-1	COVER SHEET	X
C-2	DEMOLITION PLAN	X
C-3	EROSION CONTROL PLAN	X
C-4	SITE LAYOUT PLAN	X
C-5	UTILITY PLAN	X
C-6	GRADING PLAN	X
C-7	CONSTRUCTION PLAN	X
C-8	CONSTRUCTION PLAN	X
C-9	WATER MAIN REPLACEMENT PLAN	X
C-10	WATER MAIN REPLACEMENT PLAN	X
C-11	DETAILS	X
C-12	DETAILS	X
C-13	DETAILS	X
C-14	DETAILS	X
LA-1	PLANTING PLAN	X
LA-2	DETAILS PLAN	X
LA-3	STREETSCAPE PLAN	X
02 STRUCTURAL		
S-001	DESIGN CRITERIA AND GENERAL NOTES	X
S-002	GENERAL NOTES AND SPECIFICATIONS	X
S-101	FOUNDATION PLAN	X
S-102	SECOND FLOOR FRAMING PLAN	X
S-103	ROOF FRAMING PLAN	X
S-200	LATERAL FRAME ELEVATIONS	X
S-301	BUS BAY FOUNDATION PLAN	X
S-302	BUS BAY FRAMING PLAN	X
S-401	SECOND FLOOR LOADING PLAN	X
S-402	ROOF LOADING PLAN & WALL LOADING DIAGRAM	X
S-501	FOUNDATION SECTIONS & DETAILS	X
S-511	FLOOR FRAMING SECTIONS & DETAILS	X
S-512	FLOOR FRAMING SECTIONS & DETAILS	X
S-513	FLOOR FRAMING SECTIONS & DETAILS	X
S-514	ROOF FRAMING SECTIONS & DETAILS	X
S-515	ROOF FRAMING SECTIONS & DETAILS	X
S-701	TYPICAL FOUNDATION DETAILS	X
S-702	TYPICAL FOUNDATION DETAILS	X
S-711	TYPICAL CLT FRAMING DETAILS	X
03 ARCHITECTURAL		
A-001	ABBREVIATIONS & SYMBOLS	X
A-101	OVERALL FIRST FLOOR PLAN	X
A-102	OVERALL SECOND FLOOR PLAN	X
A-103	OVERALL ROOF PLAN	X
A-104	ENLARGED BUS BAY PLAN	X
A-105	ENLARGED BUS BAY ROOF PLAN	X
A-301	RCP - FIRST FLOOR	X
A-302	RCP - SECOND FLOOR	X
A-303	RCP - BUS CANOPIES	X
A-400	EXTERIOR 3D VIEWS	X
A-402	EXTERIOR ENCLOSURE ASSEMBLIES	X
A-410	EXTERIOR ELEVATIONS	X
A-411	EXTERIOR ELEVATIONS	X
A-412	PARTIAL ELEVATIONS	X
A-413	PANEL LAYOUT ELEVATIONS	X
A-420	BUILDING SECTIONS	X
A-421	BUILDING SECTIONS	X
A-431	BUS BAY SECTIONS	X
A-441	WALL SECTIONS	X
A-442	WALL SECTIONS	X
A-443	WALL SECTIONS	X
A-450	SECTION DETAILS	X
A-451	SECTION DETAILS	X
A-452	GLU-LAM COL. DETAILS	X
A-460	PLAN DETAILS	X
A-490	ROOF DETAILS	X
A-500	PARTITION TYPES & HEAD DETAILS	X
A-510	DOOR & HARDWARE SCHEDULE, FRAME DETAILS	X
A-520	FINISH LEGEND & SCHEDULE	X
A-521	FIRST FLOOR FINISH PLAN	X
A-522	SECOND FLOOR FINISH PLAN	X
A-610	ENLARGED STAIR PLAN & SECTION	X
A-623	ELEVATOR DETAILS	X
A-640	TOILET ROOM PLANS	X
A-700	INTERIOR ELEVATIONS BUILDING LOBBY	X
A-701	INTERIOR ELEVATIONS FIRST FLOOR	X
A-702	INTERIOR ELEVATIONS 2ND FLOOR	X
A-800	INTERIOR SECTIONS	X
A-801	INTERIOR DETAILS	X
A-802	INTERIOR DETAILS	X
A-900	FURNITURE LEGEND	X
A-901	FIRST FLOOR FURNITURE PLAN	X
A-902	SECOND FLOOR FURNITURE PLAN	X
A-903	FURNITURE PLAN BUS BAY	X
A-910	SIGNAGE PLANS & DETAILS	X
04 MECHANICAL		
M-001	MECHANICAL SYMBOLS	X
M-002	MECHANICAL ABBREVIATIONS	X
M-101	MECHANICAL FIRST FLOOR PLAN	X
M-102	MECHANICAL SECOND FLOOR PLAN	X
M-201	MECHANICAL FIRST FLOOR PIPING PLAN	X
M-801	MECHANICAL DETAILS	X
M-802	MECHANICAL DETAILS	X
M-901	MECHANICAL SCHEDULES	X

DRAWING LIST

SHEET NUMBER	DRAWING TITLE	IFC - 05/04/2016
05 PLUMBING		
P-001	PLUMBING SYMBOLS, ABBREVIATIONS & GENERAL NOTES	X
P-101	PLUMBING WASTE FIRST FLOOR PLAN	X
P-102	PLUMBING WASTE SECOND FLOOR PLAN	X
P-103	PLUMBING ROOF PLAN	X
P-104	PLUMBING GROUND LEVEL CANOPY PLAN	X
P-105	PLUMBING CANOPY ROOF PLAN	X
P-201	PLUMBING WATER FIRST FLOOR PLAN	X
P-202	PLUMBING WATER SECOND FLOOR PLAN	X
P-601	PLUMBING WATER, WASTE, AND VENT RISER DIAGRAMS	X
P-801	PLUMBING DETAILS	X
P-802	PLUMBING DETAILS	X
P-901	PLUMBING SCHEDULES	X
06 FIRE PROTECTION		
FP-001	FIRE PROTECTION SYMBOLS, ABBREVIATIONS, GENERAL NOTES & DETAILS	X
FP-101	FIRE PROTECTION FLOOR PLANS	X
07 ELECTRICAL		
E-001	ELECTRICAL SYMBOLS	X
E-002	ELECTRICAL ABBREVIATIONS & SCHEDULES	X
E-100	ELECTRICAL SITE LIGHTING PLAN	X
E-101	ELECTRICAL LIGHTING PLAN LEVEL 1	X
E-102	ELECTRICAL LIGHTING PLAN LEVEL 2	X
E-200	ELECTRICAL SITE POWER PLAN	X
E-201	ELECTRICAL POWER PLAN LEVEL 1	X
E-202	ELECTRICAL POWER PLAN LEVEL 2	X
E-601	ELECTRICAL RISER	X
E-801	ELECTRICAL DETAILS	X
E-802	ELECTRICAL DETAILS	X
E-901	ELECTRICAL PANEL SCHEDULES	X
08 FIRE ALARM		
FA-101	FIRE ALARM PLAN LEVEL 1	X
FA-102	FIRE ALARM PLAN LEVEL 2	X
FA-601	FIRE ALARM MATRIX, RISER & DETAILS	X
09 SECURITY		
SEC-101	SYSTEMS OVERALL PLAN	X
SEC-102	SYSTEMS FLOOR PLAN LEVEL 1	X
SEC-103	SYSTEMS FLOOR PLAN LEVEL 2	X
SEC-104	SYSTEMS FLOOR PLAN STATION	X
SEC-501	SYSTEMS DETAILS	X
SEC-502	SYSTEMS DETAILS	X
SEC-503	SECURITY CAMERA DETAILS	X
SEC-504	SECURITY CAMERA DETAILS	X

Greenville
NORTH CAROLINA

JACOBS

333 Fayetteville Street, Suite 1100
Raleigh, NC 27601
PH: 919-334-3100 FX: 919-334-3122 www.jacobs.com
North Carolina Engineering Firm License No. F-287
North Carolina Architectural Firm Reg. No. 50757

AYERS SAINT GROSS

Consultants:

ARK Consulting Group, PLLC

Coaly Design
Landscape Architecture + Land Planning

Seals:

JOHN A. STEVERMER, NC LICENSE NO. 5858

General Notes:

Project Client:
CITY OF GREENVILLE

GREENVILLE TRANSPORTATION ACTIVITY CENTER
600 S. Pitt Street, Greenville, NC

Number	Description	Date
0	IFC	05-10-2016

Key Plan: Project North

CAD File:
Project No.: L3005900
Copyright: 2015 Jacobs Engineering Group

Drawing Sheet Title:
DRAWING LIST

Drawing Sheet Number:
G-001

Owner's Drawing Sheet No.:

2012 APPENDIX B
BUILDING CODE SUMMARY
FOR ALL COMMERCIAL PROJECTS
(EXCEPT 1 AND 2-FAMILY DWELLINGS AND TOWNHOUSES)
(Reproduce the following data on the building plans sheet 1 or 2)

Name of Project: Greenville Transportation and Activity Center
Address: 600 South Pitt St. Zip Code 27834
Proposed Use: Transportation Center and Offices
Owner/Authorized Agent: Kenneth Jackson Phone # (252) 329-4480 E-Mail kjackson@greenvillenc.gov
Owned By: ☒ City/County ☐ Private ☐ State
Code Enforcement Jurisdiction: ☒ City GREENVILLE ☐ County_____ ☐ State

LEAD DESIGN PROFESSIONAL: Michael G. Stevenson

DESIGNER	FIRM	NAME	LICENSE #	TELEPHONE #	E-MAIL
Architectural	JACOBS	John A. Stevermer	5858	(919)334-3115	John.Stevermer@Jacobs.com
Civil	ARK	Scott T. Anderson	28425	(252)558-0888	Scott@arkconsultinggroup.com
Electrical	JACOBS	Mark Willis	25653	(919)859-5111	Mark.Willis@Jacobs.com
Fire Alarm	JACOBS	Mark Willis	25653	(919)859-5111	Mark.Willis@Jacobs.com
Plumbing	JACOBS	Rob Unger	24042	(919)859-5765	Rob.Unger@Jacobs.com
Mechanical	JACOBS	Rob Unger	24042	(919)859-5765	Rob.Unger@Jacobs.com
Sprinkler-Standpipe	JACOBS	Rob Unger	24042	(919)859-5765	Rob.Unger@Jacobs.com
Structural	JACOBS	Trevor Winnell	030518	(919)859-5190	Trevor.Winnell@Jacobs.com
Landscape Architect	Coaly Design	Kimberly J. Wicker	1352	(919)539-0012	Kimberly@coalydesign.com
Retaining Walls >5' High				(___)	
Other				(___)	

2012 EDITION OF NC CODE FOR: ☒ New Construction ☐ Addition ☐ Upfit
EXISTING: ☐ Reconstruction ☐ Alteration ☐ Repair ☐ Renovation
CONSTRUCTED: (date) _____ **ORIGINAL USE(S)** (Ch. 3): _____
RENOVATED: (date) _____ **CURRENT USE(S)** (Ch. 3): _____
PROPOSED USE(S) (Ch. 3): _____

BASIC BUILDING DATA
Construction Type: (check all that apply) ☐ I-A ☐ I-B ☐ II-A ☐ II-B ☐ III-A ☐ III-B ☐ IV ☒ V-A ☐ V-B
Sprinklers: ☐ No ☐ Partial ☒ Yes ☒ NFPA 13 ☐ NFPA 13R ☐ NFPA 13D
Standpipes: ☒ No ☐ Yes Class ☐ I ☐ II ☐ III ☐ Wet ☐ Dry
Fire District: ☒ No ☐ Yes (Primary) **Flood Hazard Area:** ☒ No ☐ Yes
Building Height: (feet) 26'6"
Gross Building Area:

FLOOR	EXISTING (SQ FT)	NEW (SQ FT)	SUB-TOTAL
2nd Floor		9,389 *	*(4,249 GSF HEATED - 4,710 UNDER CANOPY)
1st Floor		9,389	**(5,193 GSF HEATED – 3,882 UNDER CANOPY)
TOTAL		18,777	

ALLOWABLE AREA

Occupancy:
Assembly ☐ A-1 ☐ A-2 ☒ A-3 ☐ A-4 ☐ A-5
Business ☒
Educational ☐
Factory ☐ F-1 Moderate ☐ F-2 Low
Hazardous ☐ H-1 Detonate ☐ H-2 Deflagrate ☐ H-3 Combust ☐ H-4 Health ☐ H-5 HPM
Institutional ☐ I-1 ☐ I-2 ☐ I-3 ☐ I-4
I-3 Condition ☐ 1 ☐ 2 ☐ 3 ☐ 4 ☐ 5
Mercantile ☐
Residential ☐ R-1 ☐ R-2 ☐ R-3 ☐ R-4
Storage ☐ S-1 Moderate ☐ S-2 Low ☐ High-piled
☐ Parking Garage ☐ Open ☐ Enclosed ☐ Repair Garage
Utility and Miscellaneous ☐

Accessory Occupancies:
Assembly ☐ A-1 ☐ A-2 ☐ A-3 ☐ A-4 ☐ A-5
Business ☐
Educational ☐
Factory ☐ F-1 Moderate ☐ F-2 Low
Hazardous ☐ H-1 Detonate ☐ H-2 Deflagrate ☐ H-3 Combust ☐ H-4 Health ☐ H-5 HPM
Institutional ☐ I-1 ☐ I-2 ☐ I-3 ☐ I-4
I-3 Condition ☐ 1 ☐ 2 ☐ 3 ☐ 4 ☐ 5
Mercantile ☐
Residential ☐ R-1 ☐ R-2 ☐ R-3 ☐ R-4
Storage ☐ S-1 Moderate ☒ S-2 Low ☐ High-piled
☐ Parking Garage ☐ Open ☐ Enclosed ☐ Repair Garage
Utility and Miscellaneous ☐

Incidental Uses (Table 508.2.5):
☐ Furnace room where any piece of equipment is over 400,000 Btu per hour input
☐ Rooms with boilers where the largest piece of equipment is over 15 psi and 10 horsepower
☐ Refrigerant machine room
☐ Hydrogen cutoff rooms, not classified as Group H
☐ Incinerator rooms
☐ Paint shops, not classified as Group H, located in occupancies other than Group F
☐ Laboratories and vocational shops, not classified as Group H, located in a Group E or I-2 occupancy
☐ Laundry rooms over 100 square feet
☐ Group I-3 cells equipped with padded surfaces
☐ Group I-2 waste and linen collection rooms
☐ Waste and linen collection rooms over 100 square feet
☐ Stationary storage battery systems having a liquid electrolyte capacity of more than 50 gallons, or a lithium-ion capacity of 1,000 pounds used for facility standby power, emergency power or uninterrupted power supplies
☐ Rooms containing fire pumps
☐ Group I-2 storage rooms over 100 square feet
☐ Group I-2 commercial kitchens
☐ Group I-2 laundries equal to or less than 100 square feet
☐ Group I-2 rooms or spaces that contain fuel-fired heating equipment

Special Uses: ☐ 402 ☐ 403 ☒ 404 ☐ 405 ☐ 406 ☐ 407 ☐ 408 ☐ 409 ☐ 410 ☐ 411 ☐ 412 ☐ 413 ☐ 414 ☐ 415 ☐ 416 ☐ 417 ☐ 418 ☐ 419 ☐ 420 ☐ 421 ☐ 422 ☐ 423 ☐ 424 ☐ 425 ☐ 426 ☐ 427
Special Provisions: ☐ 509.2 ☐ 509.3 ☐ 509.4 ☐ 509.5 ☐ 509.6 ☐ 509.7 ☐ 509.8 ☐ 509.9

Mixed Occupancy: ☐ No ☒ Yes Separation: ____ Hr. Exception: _____
☐ Incidental Use Separation (508.2.5)
This separation is not exempt as a Non-Separated Use (see exceptions).
☒ Non-Separated Use (508.3)
The required type of construction for the building shall be determined by applying the height and area limitations for each of the applicable occupancies to the entire building. The most restrictive type of construction, so determined, shall apply to the entire building.
☐ Separated Use (508.4) - See below for area calculations
For each story, the area of the occupancy shall be such that the sum of the ratios of the actual floor area of each use divided by the allowable floor area for each use shall not exceed 1.

$$\frac{\text{Actual Area of Occupancy A}}{\text{Allowable Area of Occupancy A}} + \frac{\text{Actual Area of Occupancy B}}{\text{Allowable Area of Occupancy B}} \leq 1$$

$$\_\_\_\_ + \_\_\_\_ + \ldots = \_\_\_\_ \leq 1.00$$

STORY NO.	DESCRIPTION AND USE	(A) BLDG AREA PER STORY (ACTUAL)	(B) TABLE 503[5] AREA	(C) AREA FOR FRONTAGE INCREASE[1]	(D) AREA FOR SPRINKLER INCREASE[2]	(E) ALLOWABLE AREA OR UNLIMITED[3]	(F) MAXIMUM BUILDING AREA[4]
Level One	A-3	9,389	11,500	N/A	N/A	11,500	23,000
Level Two	A-3	9,389	11,500	N/A	N/A	11,500	

[1] Frontage area increases from Section 506.2 are computed thus:
a. Perimeter which fronts a public way or open space having 20 feet minimum width = _____ (F)
b. Total Building Perimeter = _____ (P)
c. Ratio (F/P) = _____ (F/P)
d. W = Minimum width of public way = _____ (W)
e. Percent of frontage increase $I_f = 100 [F/P - 0.25] \times W/30$ = _____ (%)
[2] The sprinkler increase per Section 506.3 is as follows:
a. Multi-story building I_s = 200 percent
b. Single story building I_s = 300 percent
[3] Unlimited area applicable under conditions of Section 507.
[4] Maximum Building Area = total number of stories in the building x E (506.4).
[5] The maximum area of open parking garages must comply with Table 406.3.5. The maximum area of air traffic control towers must comply with Table 412.1.2.

ALLOWABLE HEIGHT

	ALLOWABLE (TABLE 503)	INCREASE FOR SPRINKLERS	SHOWN ON PLANS	CODE REFERENCE
Type of Construction	Type V-A		Type V-A	602.5
Building Height in Feet	50'	Feet = H + 20' = _____	26'-6"	Table 503
Building Height in Stories	2	Stories = 1 + N/A	2	Table 503

FIRE PROTECTION REQUIREMENTS

BUILDING ELEMENT	FIRE SEPARATION DISTANCE (FEET)	RATING REQ'D	RATING PROVIDED (W/ * REDUCTION)	DETAIL # AND SHEET #	DESIGN # FOR RATED ASSEMBLY	DESIGN # FOR RATED PENETRATION	DESIGN # FOR RATED JOINTS
Structural Frame, including columns, girders, trusses		HT	HT				
Bearing Walls							
Exterior							
North	<30'	1 HR	1 HR	*1	*1	M-802, P-802, E-802	
East	<30'	1 HR	1 HR	*1	*1	M-802, P-802, E-802	
West	N/A	N/A	N/A	*1	*1		
South	<30'	1 HR	1 HR	*1	*1	M-802, P-802, E-802	
Interior		0HR/ HT	0 HR/HT	G-003	Test Report	M-802, P-802, E-802	
Nonbearing Walls and Partitions							
Exterior walls							
North	<30'	0	0				
East	<30'	0	0				
West	<30'	0	0				
South	<30'	0	0				
Interior walls and partitions		0/1 HR	0/1 HR	G-003	Test Report	M-802, P-802, E-802	
Floor Construction Including supporting beams and joists		HT	HT	*2	*2		
Roof Construction Including supporting beams and joists		HT	HT	*2	*2		
Shaft Enclosures - Exit		1 HR	1 HR	G-003	Test Report	M-802, P-802, E-802	
Shaft Enclosures - Other		1 HR	1HR	G-003	Test Report	M-802, P-802, E-802	
Corridor Separation		0 HR	0 HR				
Occupancy Separation		N/A	N/A				
Party/Fire Wall Separation		N/A	N/A				
Smoke Barrier Separation		N/A	N/A				
Tenant Separation		N/A	N/A				
Incidental Use Separation		N/A	N/A				

* Indicate section number permitting reduction - NCSBC Table 601 footnote d.
*1 Cross Laminated Timber allowed in 2 Hr rated exterior wall by recent amendment adoption to NCSBC section 602.4.8.2.

LIFE SAFETY SYSTEM REQUIREMENTS

Emergency Lighting: ☐ No ☒ Yes
Exit Signs: ☐ No ☒ Yes
Fire Alarm: ☐ No ☒ Yes
Smoke Detection Systems: ☐ No ☒ Yes ☐ Partial _____
Panic Hardware: ☐ No ☒ Yes

LIFE SAFETY PLAN REQUIREMENTS

Life Safety Plan Sheet #: G-110

☒ Fire and/or smoke rated wall locations (Chapter 7)
☐ Assumed and real property line locations
☐ Exterior wall opening area with respect to distance to assumed property lines (705.8)
☐ Existing structures within 30' of the proposed building
☒ Occupancy types for each area as it relates to occupant load calculation (Table 1004.1.1)
☒ Occupant loads for each area
☒ Exit access travel distances (1016)
☒ Common path of travel distances (1014.3 & 1028.8)
☒ Dead end lengths (1018.4)
☒ Clear exit widths for each exit door
☒ Maximum calculated occupant load capacity each exit door can accommodate based on egress width (1005.1)
☒ Actual occupant load for each exit door
☐ A separate schematic plan indicating where fire rated floor/ceiling and/or roof structure is provided for purposes of occupancy separation
☐ Location of doors with panic hardware (1008.1.10)
☐ Location of doors with delayed egress locks and the amount of delay (1008.1.9.7)
☐ Location of doors with electromagnetic egress locks (1008.1.9.8)
☐ Location of doors equipped with hold-open devices
☐ Location of emergency escape windows (1029)
☐ The square footage of each fire area (902)
☐ The square footage of each smoke compartment (407.4)
☐ Note any code exceptions or table notes that may have been utilized regarding the items above

ACCESSIBLE DWELLING UNITS
(SECTION 1107)

TOTAL UNITS	ACCESSIBLE UNITS REQUIRED	ACCESSIBLE UNITS PROVIDED	TYPE A UNITS REQUIRED	TYPE A UNITS PROVIDED	TYPE B UNITS REQUIRED	TYPE B UNITS PROVIDED	TOTAL ACCESSIBLE UNITS PROVIDED

ACCESSIBLE PARKING
(SECTION 1106)

LOT OR PARKING AREA	TOTAL # OF PARKING SPACES REQUIRED	TOTAL # OF PARKING SPACES PROVIDED	# OF ACCESSIBLE SPACES PROVIDED: REGULAR WITH 5' ACCESS AISLE	VAN SPACES WITH 132" ACCESS AISLE	VAN SPACES WITH 8' ACCESS AISLE	TOTAL # ACCESSIBLE PROVIDED
8500	0	22	1	0	1	2
TOTAL						

STRUCTURAL DESIGN

DESIGN LOADS:

Importance Factors: Wind (I_W) __1.0____
Snow (I_S) __1.0____
Seismic (I_E) __1.0____

Live Loads: Roof __20____ psf
Office __50____ psf
Assembly __100____ psf
Corridors __80____ psf
(Above first flr)
Corridors __100____ psf
(First floor)
Stairs __100____ psf

Ground Snow Load: __15____ psf

Wind Load: Basic Wind Speed __110____ mph (ASCE-7)
Exposure Category __C____
Wind Base Shears (for MWFRS) Vx = __30 k___ Vy = __60 k___

SEISMIC DESIGN CATEGORY: ☐ A ☒ B ☐ C ☐ D
Provide the following Seismic Design Parameters:
Occupancy Category (Table 1604.5) ☐ I ☒ II ☐ III ☐ IV
Spectral Response Acceleration S_S 12.3 %g S_1 6.2 %g
Site Classification (Table 1613.5.2) ☐ A ☐ B ☐ C ☒ D ☐ E ☐ F
Data Source: ☒ Field Test ☐ Presumptive ☐ Historical Data
Basic structural system (check one)
☒ Bearing Wall ☐ Dual w/Special Moment Frame
☐ Building Frame ☐ Dual w/Intermediate R/C or Special Steel
☐ Moment Frame ☐ Inverted Pendulum
Seismic base shear: V_X = __40 k___ V_Y = __40 k___
Analysis Procedure: ☐ Simplified ☒ Equivalent Lateral Force ☐ Dynamic
Architectural, Mechanical, Components anchored? ☐ Yes ☒ No

LATERAL DESIGN CONTROL: Earthquake ☐ Wind ☒

SOIL BEARING CAPACITIES:
Field Test (provide copy of test report) __2,000_____ psf
Presumptive Bearing capacity _____ psf
Pile size, type, and capacity _____

SPECIAL INSPECTIONS REQUIRED: ☐ Yes ☒ No

PLUMBING FIXTURE REQUIREMENTS
(TABLE 2902.1)

USE		WATERCLOSETS MALE	WATERCLOSETS FEMALE	URINALS	LAVATORIES MALE	LAVATORIES FEMALE	SHOWERS/ TUBS	DRINKING FOUNTAINS REGULAR	DRINKING FOUNTAINS ACCESSIBLE
SPACE	EXISTING	0	0	0	0	0	0	0	0
	NEW	4	8	4	4	4	0	1	1
	REQ'D	5	5	0	2	2	0	1	1

SPECIAL APPROVALS

Special approval: (Local Jurisdiction, Department of Insurance, OSC, DPI, DHHS, ICC, etc., describe below)

ENERGY SUMMARY

ENERGY REQUIREMENTS:
The following data shall be considered minimum and any special attribute required to meet the energy code shall also be provided. Each Designer shall furnish the required portions of the project information for the plan data sheet. If performance method, state the annual energy cost for the standard reference design vs annual energy cost for the proposed design.

Climate Zone: ☒ 3 ☐ 4 ☐ 5

Method of Compliance:
☒ Prescriptive (Energy Code)
☐ Performance (Energy Code)
☐ Prescriptive (ASHRAE 90.1)
☐ Performance (ASHRAE 90.1)

THERMAL ENVELOPE

Roof/ceiling Assembly (each assembly)
Description of assembly: Membrane roofing on rigid insulation on Cross laminate timber deck
U-Value of total assembly: 0.032
R-Value of insulation: 25
Skylights in each assembly: N/A
U-Value of skylight: N/A
total square footage of skylights in each assembly: N/A

Exterior Walls (each assembly)
Description of assembly: Brick veneer or solid phenolic rainscreen panel on airspace with air barrier on ½" gypsum sheathing on cross laminated timber decking
U-Value of total assembly: 0.324
R-Value of insulation: 12.9
Openings (windows or doors with glazing)
U-Value of assembly: 0.38
Solar heat gain coefficient: 0.374
projection factor: Varies – North -0.17, West -1.3, South 0.3, East-1.4
Door R-Values: 6.4

Walls below grade (each assembly)
Description of assembly: N/A
U-Value of total assembly: N/A
R-Value of insulation: N/A

Floors over unconditioned space (each assembly)
Description of assembly: N/A
U-Value of total assembly: N/A
R-Value of insulation: N/A

Floors slab on grade
Description of assembly: Concrete slab on vapor barrier on gravel
U-Value of total assembly: 0.1569
R-Value of insulation: 10
Horizontal/vertical requirement: Not required, however 24" provided
slab heated: N/A

MECHANICAL SUMMARY

MECHANICAL SYSTEMS, SERVICE SYSTEMS AND EQUIPMENT

Thermal Zone
winter dry bulb: 20.8
summer dry bulb: 95.1

Interior design conditions
winter dry bulb: 70 DEG F
summer dry bulb: 74 DEG F
relative humidity: 40%

Building heating load: **235.8 MBH**

Building cooling load: **22.2 Tons**

Mechanical Spacing Conditioning System
Unitary
description of unit: SEE SCHEDULES
heating efficiency: SEE SCHEDULES
cooling efficiency: SEE SCHEDULES
size category of unit: SEE SCHEDULES
Boiler
Size category. If oversized, state reason.: N/A
Chiller
Size category. If oversized, state reason.: N/A

List equipment efficiencies: SEE SCHEDULES

ELECTRICAL SUMMARY

ELECTRICAL SYSTEM AND EQUIPMENT

Method of Compliance:
Energy Code: ☒ Prescriptive ☐ Performance
ASHRAE 90.1: ☐ Prescriptive ☐ Performance

Lighting schedule (each fixture type)
lamp type required in fixture SEE LUMINAIRE SCHEDULE
number of lamps in fixture SEE LUMINAIRE SCHEDULE
ballast type used in the fixture SEE LUMINAIRE SCHEDULE
number of ballasts in fixture SEE LUMINAIRE SCHEDULE
total wattage per fixture SEE LUMINAIRE SCHEDULE
total interior wattage specified vs. allowed (space by space) 4952 va / 8215 va
total exterior wattage specified vs. allowed

Additional Prescriptive Compliance
☐ 506.2.1 More Efficient Mechanical Equipment
☐ 506.2.2 Reduced Lighting Power Density
☐ 506.2.3 Energy Recovery Ventilation Systems
☐ 506.2.4 Higher Efficiency Service Water Heating
☐ 506.2.5 On-Site Supply of Renewable Energy
☐ 506.2.6 Automatic Daylighting Control Systems

Greenville
NORTH CAROLINA

JACOBS
333 Fayetteville Street, Suite 1100
Raleigh, NC 27601
PH: 919-334-3100 FX: 919-334-3122 www.jacobs.com
North Carolina Engineering Firm License No. F-287
North Carolina Architectural Firm Reg. No. 50757

AYERS SAINT GROSS

Consultants:
ARK Consulting Group, PLLC

Coaly Design
Landscape Architecture + Land Planning

Seals:
JOHN A. STEVERMER REGISTERED ARCHITECT 5858 NORTH CAROLINA 05-09-18 DURHAM, N. C.

JOHN A. STEVERMER, NC LICENSE NO. 5858

General Notes:

Project Client:
CITY OF GREENVILLE

GREENVILLE TRANSPORTATION ACTIVITY CENTER
600 S. Pitt Street, Greenville, NC

Number	Description	Date
0	IFC	05-10-2018

Key Plan: Project North

CAD File:
Project No.: L3005900
Copyright: 2015 Jacobs Engineering Group

Drawing Sheet Title:
CODE SUMMARY SHEET

Drawing Sheet Number:
G-002

Owner's Drawing Sheet No.:

6.9 Summary of ResultsQ:\Building_Building Systems\REPORTS\CLT Reports 2012-2013\FINAL Preliminary CLT Fire Test Report - July 2012.Docx

The results for the wall tests are as follows:

Test 2 was a wall assembly protected with two layers of 12.7 mm (½") Type X gypsum board, which failed structurally due to buckling after 106 minutes when subjected to 333 kN/m. From one data point a charring rate of 0.41 mm/min was calculated. The maximum deflection of the wall was 48 mm. From the thermocouple data, it was determined that the two layers of gypsum delayed the onset of charring in both the floor and wall tests by approximately 60 minutes;

Test 4 was an unprotected 5-ply wall with an applied load of 333 kN/m. The wall failed after 113 minutes due to structural failure. The assembly popped out of the furnace possibly to a loading eccentricity that developed as the panels charred during the test. The average maximum deflection was 47 mm. The average charring rate from thermocouple data was calculated as 0.65 mm/min;

Test 8 was an unprotected 5-ply wall with 21 mm plies. A load of 72 kN/m was applied. The wall failed after 57 minutes due to structural failure. The maximum deflection was 77 mm. The average charring rate from thermocouple data was calculated as 0.80 mm/min. Thinner lamellas of 21 mm seem to show a higher char rate than thicker lamellas (35 mm). Further investigations should be carried out in order to evaluate the proper heat transfer as well as its impact on the charring rate;

The results from the floor tests are as follows:

Test 1 was a floor assembly protected with two layers of 12.7 mm (½") Type X gypsum board, where a load of 2.7 kPa was applied. The test was ended after 77 minutes due to equipment concerns from the laboratory staff, therefore failure was not reached. No embedded thermocouples reached 300°C to indicate charring of the wood; therefore, no charring rate could be calculated from the data. The greatest measured char depth in the panel after the test was 11.2 mm and the maximum deflection of the floor was 32.1 mm;

Test 3 was an unprotected 5-ply floor with an applied load of 11.75 kPa. The floor failed after 96 minutes when flames were observed at one of the half-lapped joints. The average maximum deflection was 129 mm. The average charring rate from thermocouple data was calculated as 0.64 mm/min;

Test 5 was a 3-ply floor protected with one layer of 15.9 mm (⅝") Type X gypsum board. A load of 2.4 kPa was applied. The floor failed after 86 minutes due to flames observed at one of the half-lapped joints. The average maximum deflection was 321 mm. The average charring rate from thermocouple data was calculated as 0.60 mm/min;

© 2012. All rights reserved.

	3	5	175	24	129
	5	3	105	22	321
	6	5	175	19	153
	7	7	245	16	170

Table 6-38 summarizes the performance of gypsum board in terms the time delay in the onset of charring in the panels and the possible fall-off times from data. The delay of the onset of charring is determined as the time when the exposed face of the CLT reaches 300°C (behind the gypsum board). The time to fall-off is determined by the time the temperatures behind the gypsum board reach 600°C from the data.

Table 6-38 – Performance of gypsum board

	Test #	# of Plies	Thickness (mm)	Onset of charring (300°C) (min)	Time to fall-off (600°C) (min)*
WALLS	2	3	114	61	56 / 96
	4	5	175	n.a.	n.a.
	8	5	105	n.a.	n.a.
FLOORS	1	3	114	61	53 / 77
	3	5	175	n.a.	n.a.
	5	3	105	25	45
	6	5	175	25	27
	7	7	245	n.a.	n.a.

* when two values are given this indicates the fall-off of the 1st and 2nd layer respectively
n.a. - gypsum board was not applied for this test

Table 6-39 summarizes the average charring rates between thermocouple depths calculated from the data. Cells are left blank for tests where no thermocouples reached 300°C and a charring rate could not be calculated. Overall charring rates are presented as calculated from the thermocouple data and from the cut samples. The charring rates for the cut samples are generally higher than those calculated from data. This could be in part due to some assemblies that continued to burn for a few minutes after the test before they were fully extinguished. This would allow charring to continue slightly longer which resulted in a thicker char depth and therefore a faster charring rate.

© 2012. All rights reserved.

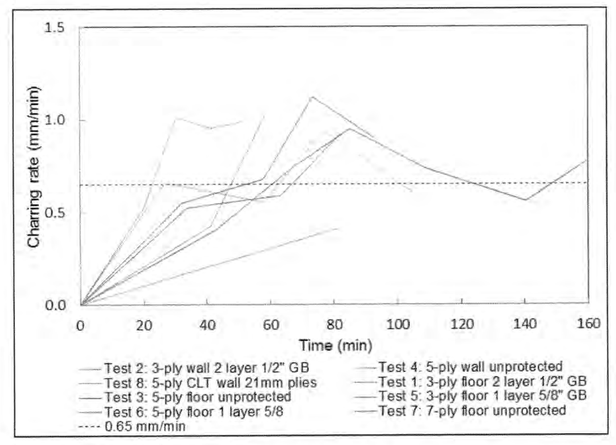

Figure 6-86 – Charring rates from data compared to 0.65 mm/min

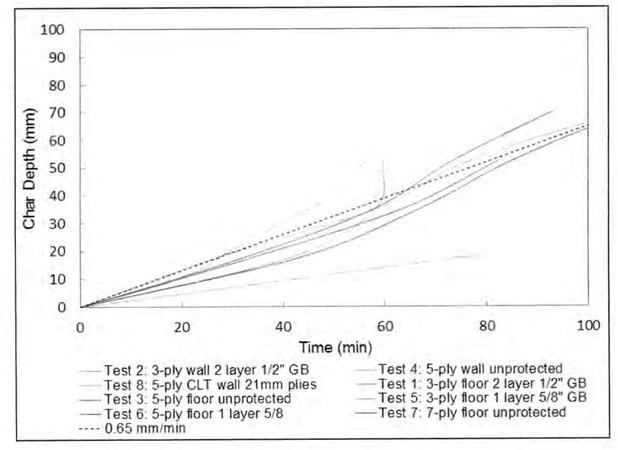

© 2012. All rights reserved.

Test 6 was a 5-ply floor protected with one layer of 15.9 mm (⅝") Type X gypsum board. A load of 8.1 kPa was applied. The floor failed after 124 minutes due to flames observed at one of the half-lapped joints. The average maximum deflection was 153 mm. The average charring rate from thermocouple data was calculated as 0.75 mm/min;

Test 7 was an unprotected 7-ply floor. A load of 14.58 kPa was applied. The floor failed after 178 minutes due to structural failure. The average maximum deflection was 170 mm. The average charring rate from thermocouple data was calculated as 0.65 mm/min.

Table 6-36 summarizes the results from the fire tests and categorizes the tests based on assembly type, i.e. wall or floor.

Table 6-36 – Summary of CLT fire test results

	Test #	# of Plies	Thickness (mm)	Type X Gypsum Board Protection	Load	Load Ratio	Failure Mode	Fire Resistance (min)
WALLS	2	3	114	2 x 12.7 mm (½")	333 kN/m	76% P_r	Structural	106
	4	5	175	Unprotected	333 kN/m	37% P_r	Structural	113
	8	5	105	Unprotected	72 kN/m	34% P_r	Structural	57
FLOORS	1	3	114	2 x 12.7 mm (½")	2.70 kPa	36% M_r	No failure	77 *
	3	5	175	Unprotected	11.75 kPa	59% M_r	Integrity	96
	5	3	105	1 x 15.9 mm (⅝")	2.40 kPa	75% M_r	Integrity	86
	6	5	175	1 x 15.9 mm (⅝")	8.10 kPa	101% M_r	Integrity	124
	7	7	245	Unprotected	14.58 kPa	101% M_r	Structural	178

* The first test conducted was stopped due to laboratory equipment safety concerns. Failure was not reached.

Table 6-37 summarizes the average deflections at mid-height for walls and at mid-span for floors using DFL-04, DFL-05, and DFL-06.

Table 6-37 – Average deflections along the centreline (mid-height / mid-span)

	Test #	# of Plies	Thickness (mm)	Initial Deflection (mm)	Maximum Deflection (mm)
WALLS	2	3	114	1	48
	4	5	175	0	25
	8	5	105	1	77
FLOORS	1	3	114	15	32

© 2012. All rights reserved.

Table 6-39 – Summary of average charring rates between thermocouple depths

		Avg. Charring Rate (mm/min)						Overall average charring rate (mm/min)	
	Ply*	1	1-2	2	2-3	3	3-4	From Data	From Sample
WALLS	Test 2	0.41	-	-	-	-	-	0.41	0.37
	Test 4	0.66	0.56	0.98	0.55	-	-	0.65	0.74
	Test 8	0.53	1.00	0.95	1.00	-	-	0.80	0.98
FLOORS	Test 1	-	-	-	-	-	-	-	0.59
	Test 3	0.52	0.59	0.92	-	-	-	0.64	0.73
	Test 5	0.43	1.02	-	-	-	-	0.60	0.78
	Test 6	0.55	0.68	1.12	0.90	-	-	0.75	0.88
	Test 7	0.41	0.74	0.95	0.74	0.56	0.80	0.65	0.79

*Since the ply thicknesses were not consistent throughout all of the tests this table indicates the charring rate that was calculated between the thermocouple locations. Locations of thermocouples located mid-depth in a ply are indicated by a whole number (ex: 1, 2, etc.), locations at an interface are indicated by the two nearby layers (ex: 1-2).

Figure 6-86 shows the charring rates calculated from the thermocouple data and Figure 6-87 illustrates the char depth from the data for all of the tests. The figures demonstrates how the majority of overall charring rates calculated from thermocouple data are consistent with the theoretical charring rate of 0.65 mm/min presented in Eurocode 5 (Part 1-2, Table 3.1) [9]. The average of these rates is 0.64 mm/min. Figure 6-88 shows the char depth from the measured samples taken after the tests compared to a rate of 0.65 mm/min. It can be seen that most of these rates are higher than the 0.65 mm/min line. This may be in part due to charring that continued after the test was completed. There was usually several minutes between when the test ended and when the panels were extinguished with a hose. Therefore an overall charring rate of 0.65 mm/min can be assumed.

© 2012. All rights reserved.

Figure 6-87 – Char depth from data compared to 0.65 mm/min

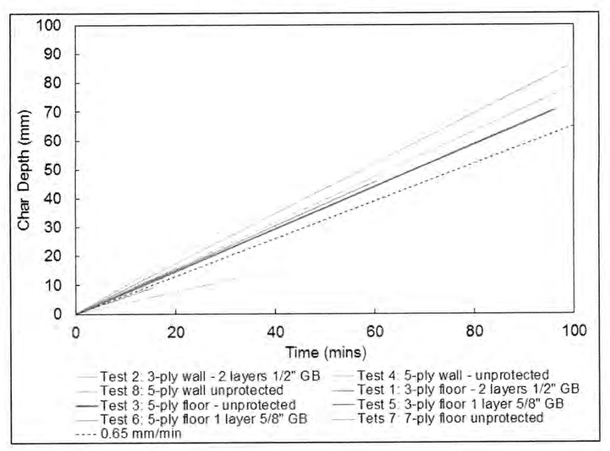

Figure 6-88 – Char depth from samples compared to 0.65 mm/min

© 2012. All rights reserved.

AW

ENGINEERING JUDGMENT FIRESTOP DETAIL

PROJECT : GTAC
CONTRACTOR : JACOBS
F-RATING = 1-HR. OR 2-HR. (SEE NOTE NO. 3 BELOW)

CROSS-SECTIONAL VIEW

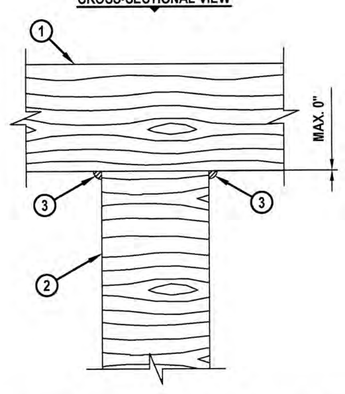

1. SOLID CROSS-LAMINATED TIMBER PANEL FLOOR (MINIMUM 6-2/3" THICK) AS DESCRIBED IN THE PRELIMINARY CLT FIRE RESISTANCE TESTING REPORT, PROJECT # 301006155 (1-HR. OR 2-HR. FIRE-RATING).
2. SOLID CROSS-LAMINATED TIMBER PANEL WALL (MINIMUM 6-2/3" THICK) AS DESCRIBED IN THE PRELIMINARY CLT FIRE RESISTANCE TESTING REPORT, PROJECT # 301006155 (1-HR. OR 2-HR. FIRE-RATING).
3. MINIMUM 1/2" BEAD HILTI CP 606 FLEXIBLE FIRESTOP SEALANT APPLIED AT POINT OF CONTACT.

NOTES : 1. MAXIMUM WIDTH OF JOINT = 0".
2. T-RATING MAY NOT EQUAL F-RATING IN ACCORDANCE WITH UL 2079.
3. FIRE-RATING OF ASSEMBLY IS DEPENDENT UPON THE PERFORMANCE OF TIMBER PANEL FLOOR ASSEMBLY AND TIMBER PANEL WALL ASSEMBLY UNDER FIRE CONDITIONS.
4. THIS SYSTEM IS DESIGNED AS A STATIC SYSTEM ONLY.

THIS ENGINEERING JUDGMENT REPRESENTS A FIRESTOP SYSTEM THAT WOULD BE EXPECTED TO PASS THE STATED RATINGS IF TESTED.
(REFERENCE : UL/cUL SYSTEM NO. HW-S-0054 & HW-S-0055)

HILTI Hilti Firestop Systems	HILTI, Inc. Plano, Texas USA (800) 879-8000	Sheet 1 of 1	Drawing No.
	Designed by Nathan D. Baker	Scale 3/16" = 1"	221381a
		Date Nov. 12, 2015	

Saving Lives through Innovation and Education

Greenville NORTH CAROLINA

JACOBS
333 Fayetteville Street, Suite 1100
Raleigh, NC 27601
PH: 919-334-3100 FX: 919-334-3122 www.jacobs.com
North Carolina Engineering Firm License No. F-287
North Carolina Architectural Firm Reg. No. 50757

AYERS SAINT GROSS

Consultants:

ARK Consulting Group, PLLC

Coaly Design
Landscape Architecture + Land Planning

Seals:

JOHN A. STEVERMER, NC LICENSE NO. 5858

General Notes:

Project Client:
CITY OF GREENVILLE

GREENVILLE TRANSPORTATION ACTIVITY CENTER
600 S. Pitt Street, Greenville, NC

Number	Description	Date
0	IFC	05-10-2016

Key Plan: Project North

CAD File:
Project No.: L3005900
Copyright: 2015 Jacobs Engineering Group

Drawing Sheet Title:
RATED ASSEMBLIES & UL DETAILS

Drawing Sheet Number:
G-003

Owner's Drawing Sheet No.:

PARKING

1. CONTRACTOR TO VERIFY THAT EXISTING BASE BUILDING PARKING COMPLIES WITH SECTIONS 1129B, 1130B and 1131B OF THE 2010 CALIFORNIA BUILDING CODE. THE BUILDING OWNER SHALL BE NOTIFIED OF ANY NONCONFORMING CONDITIONS.
2. REFER TO ASSOCIATED DIAGRAM BELOW, AS PER FIGURE 11B-18A:

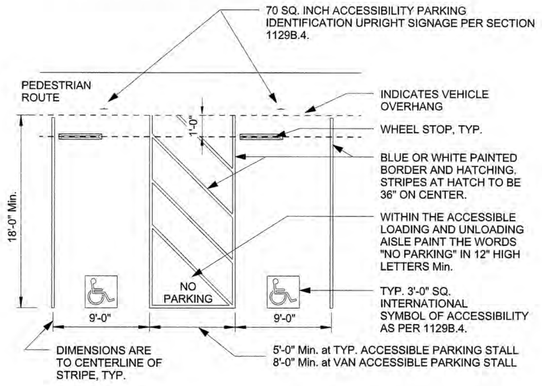

NOTE:
SURFACE SLOPE OF PARKING SPACES AND ACCESS AISLE SHALL NOT EXCEED 2% IN ANY DIRECTION

WALKS and SIDEWALKS

1. CONTRACTOR TO VERIFY THAT EXISTING WALKS AND SIDEWALKS USED TO ACCESS THE BASE BUILDING COMPLY WITH SECTIONS 1113A, 1127B, and 1133B.7 OF THE 2010 CALIFORNIA BUILDING CODE. THE BUILDING OWNER SHALL BE NOTIFIED OF ANY NONCONFORMING CONDITIONS.

ACCESSIBLE RAMPS

1. CONTRACTOR TO VERIFY THAT ALL EXISTING RAMPS OF THE BASE BUILDING ALONG THE PRESCRIBED ACCESSIBLE PATH OF TRAVEL COMPLY WITH SECTIONS 1112A, 1114A, 1122A, and 1133B.5 OF THE 2010 CALIFORNIA BUILDING CODE. THE BUILDING OWNER SHALL BE NOTIFIED OF ANY NONCONFORMING CONDITIONS.
2. NEW ACCESSIBLE RAMPS ADDED PER SCOPE OF WORK TO COMPLY WITH SECTIONS 1112A, 1114A, 1122A, and 1133B.5 OF THE 2010 CALIFORNIA BUILDING CODE.
3. REFER TO ASSOCIATED DIAGRAMS BELOW:

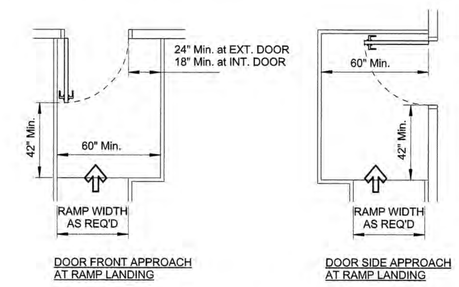

DOOR FRONT APPROACH AT RAMP LANDING

DOOR SIDE APPROACH AT RAMP LANDING

ACCESSIBLE RAMPS - LANDING CLEARANCES — as per FIGURE 11B-39

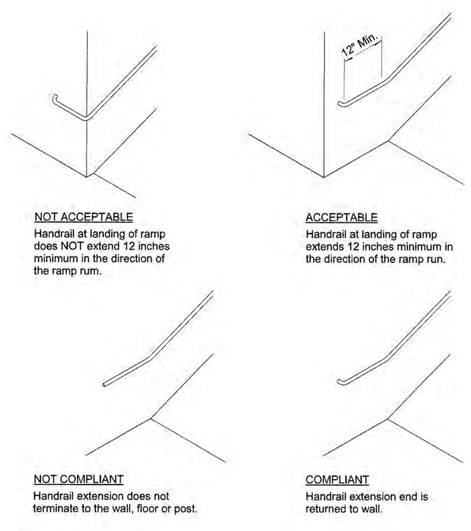

NOT ACCEPTABLE
Handrail at landing of ramp does NOT extend 12 inches minimum in the direction of the ramp run.

ACCEPTABLE
Handrail at landing of ramp extends 12 inches minimum in the direction of the ramp run.

NOT COMPLIANT
Handrail extension does not terminate to the wall, floor or post.

COMPLIANT
Handrail extension end is returned to wall.

ACCESSIBLE RAMPS - HANDRAIL TERMINATIONS — as per FIGURE 11B-27

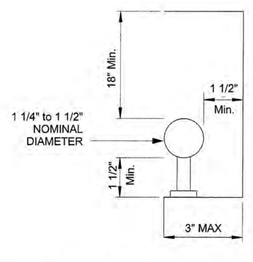

ACCESSIBLE RAMPS - HANDRAIL PROFILES — as per FIGURE 11B-36

ACCESSIBLE ENTRANCE and EXITS

1. ACCESSIBILITY FOR ENTRANCES, EXITS AND PATHS OF TRAVEL SHALL COMPLY WITH SECTIONS 1120A.1 and 1133B.1.1 OF THE 2010 CALIFORNIA BUILDING CODE. CONTRACTOR TO VERIFY COMPLIANCE OF ENTRANCES, EXITS AND PATHS OF TRAVEL IN EXISTING PORTIONS OF EXISTING BUILDING NOT IN PROJECT SCOPE OF WORK AND NOTIFY THE BUILDING OWNER OF ANY NONCONFORMING CONDITIONS.

DOORS and GATES

1. CONTRACTOR TO VERIFY THAT ALL EXISTING DOORS AND GATES OF THE BASE BUILDING ALONG THE PRESCRIBED ACCESSIBLE PATH OF TRAVEL COMPLY WITH SECTIONS 1114A.4.4, A1117A.2, 1122A.3.4, 1126A, 1132A, and 1133B.2 OF THE 2010 CALIFORNIA BUILDING CODE. THE BUILDING OWNER SHALL BE NOTIFIED OF ANY NONCONFORMING CONDITIONS.
2. NEW DOORS AND GATES ADDED AS PER PROJECT SCOPE OF WORK TO COMPLY WITH SECTIONS 1114A.4.4, A1117A.2, 1122A.3.4, 1126A, 1132A, and 1133B.2 OF THE 2010 CALIFORNIA BUILDING CODE.
3. REFER TO ASSOCIATED DIAGRAMS BELOW:

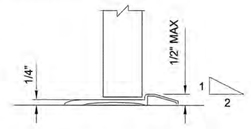

THRESHOLD PROFILE LIMITATIONS — as per FIGURE 11B-32

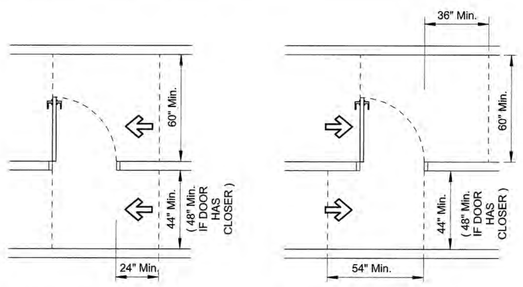

SIDE APPROACH at LATCH SIDE

SIDE APPROACH at HINGE SIDE

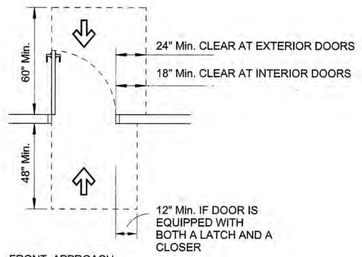

FRONT APPROACH

DOOR MANEUVERING CLEARANCES AND LANDINGS — as per FIGURES 11B-26A and 11B-26B

CORRIDORS and VESTIBULES

1. CONTRACTOR TO VERIFY THAT ALL EXISTING CORRIDORS, HALLWAYS, AND VESTIBULES OF THE BASE BUILDING ALONG THE PRESCRIBED ACCESSIBLE PATH OF TRAVEL COMPLY WITH SECTIONS 1120A and 1133B.3 OF THE 2010 CALIFORNIA BUILDING CODE. THE BUILDING OWNER SHALL BE NOTIFIED OF ANY NONCONFORMING CONDITIONS.
2. NEW CORRIDORS, HALLWAYS, AND VESTIBULES ADDED AS PER PROJECT SCOPE OF WORK TO COMPLY WITH SECTIONS 1120A, 1133B.3, and 1134B OF THE 2010 CALIFORNIA BUILDING CODE.
3. REFER TO ASSOCIATED DIAGRAMS BELOW:

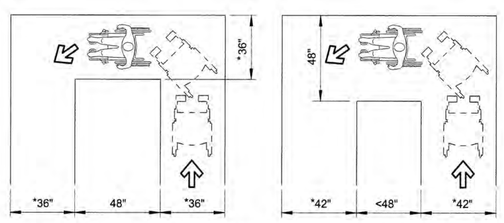

* NOTE: IF OCCUPANCY LOAD IS 10 OR MORE, THE MINIMUM WIDTH OF ALL DIMENSIONS MUST BE INCREASED TO 44" Min.

WHEELCHAIR TURNING CLEARANCES — as per FIGURE 11B-5E

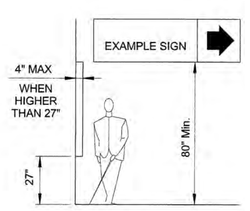

PROTRUDING OBJECTS — as per FIGURE 11B-7A

ACCESSIBLE ROUTE OF TRAVEL

1. CONTRACTOR TO VERIFY THAT ACCESSIBLE ROUTE COMPLIES WITH SECTIONS 1103B, 1105B, 1114B, 1124B, 1133B and 1134B OF THE 2010 CALIFORNIA BUILDING CODE. THE BUILDING OWNER SHALL BE NOTIFIED OF ANY NONCONFORMING CONDITIONS.
2. REFER TO SHEET ID-004 FOR ACCESSIBLE ROUTE OF TRAVEL.

ACCESSIBLE MEANS OF EGRESS

1. ACCESSIBILITY FOR MEANS OF EGRESS SHALL COMPLY WITH SECTION 1007 OF THE 2010 CALIFORNIA BUILDING CODE. CONTRACTOR TO VERIFY THAT MEANS OF EGRESS IN EXISTING PORTIONS OF BASE BUILDING NOT IN PROJECT SCOPE OF WORK ARE IN COMPLIANCE AND NOTIFY THE BUILDING OWNER OF ANY NONCONFORMING CONDITIONS.

STAIRS and STEPS

1. CONTRACTOR TO VERIFY THAT ALL EXISTING STAIRS AND STEPS OF THE BASE BUILDING ALONG THE PRESCRIBED ACCESSIBLE PATH OF TRAVEL COMPLY WITH SECTION 1115A.6, 1123A, and 1133B.4 OF THE 2010 CALIFORNIA BUILDING CODE. THE BUILDING OWNER SHALL BE NOTIFIED OF ANY NONCONFORMING CONDITIONS.
2. REFER TO ASSOCIATED DIAGRAMS BELOW:

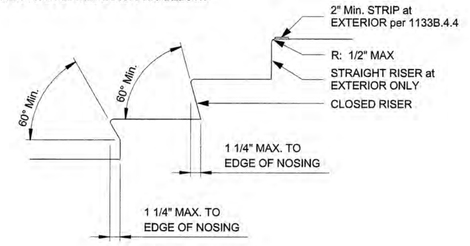

STAIR PROFILE LIMITATIONS — as per FIGURE 11B-35

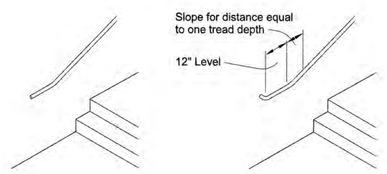

NOT COMPLIANT
Handrail extension does not terminate to the wall, floor or post.

COMPLIANT
Handrail extension end is returned to wall.

STAIRS - HANDRAIL TERMINATIONS — as per FIGURE 11B-35

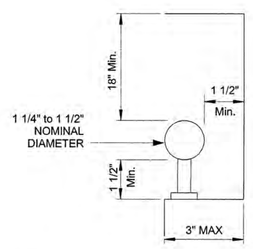

STAIRS - HANDRAIL PROFILES — as per FIGURE 11B-36

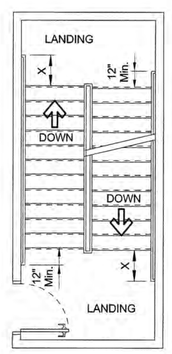

NOTE: INNER HANDRAIL AT LANDINGS OF STAIRS THAT DOUBLE BACK OR IMMEDIATELY TURN SHALL BE CONTINUOUS AND SHALL NOT EXTEND INTO LANDING OR ACCESSIBLE ROUTE OF TRAVEL.

X = EXTENSION OF HANDRAIL SHALL BE EQUAL TO THE TREAD DEPTH PLUS 12 INCHES, MINIMUM.

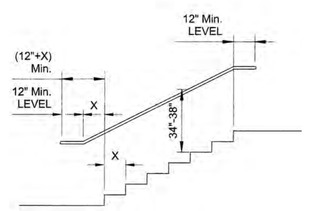

STAIRS - HANDRAIL EXTENSION LIMITATIONS — as per FIGURES 11B-35 and 11B-37

ELEVATORS and SPECIAL LIFTS

1. CONTRACTOR TO VERIFY THAT ALL EXISTING ELEVATORS AND SPECIAL ACCESS LIFTS OF THE BASE BUILDING ALONG THE PRESCRIBED ACCESSIBLE PATH OF TRAVEL COMPLY WITH SECTIONS 1116B, 1124A, and 3003 OF THE 2010 CALIFORNIA BUILDING CODE. THE BUILDING OWNER SHALL BE NOTIFIED OF ANY NONCONFORMING CONDITIONS.
2. REFER TO ASSOCIATED DIAGRAMS BELOW:

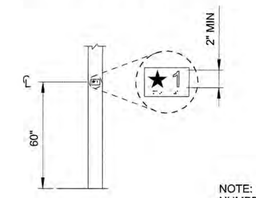

NOTE: PROVIDE FLOOR LANDING NUMBERS ON BOTH SIDES OF DOOR JAMB.

DOORJAMB MARKING FOR ELEVATOR ENTRANCES — as per FIGURE 11B-40C

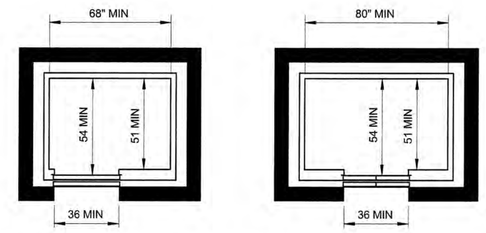

CAR INSIDE MINIMUM DIMENSIONS — as per FIGURE 11B-40A

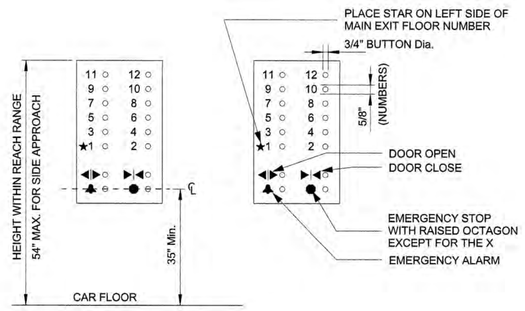

ELEVATOR CONTROL PANEL MINIMUM DIMENSIONS — as per FIGURE 11B-40B

DRINKING FOUNTAINS

1. CONTRACTOR TO VERIFY THAT NEW AND EXISTING DRINKING FOUNTAINS COMPLY WITH SECTIONS 1117B.1 and 1133B/1134B OF THE 2010 CALIFORNIA BUILDING CODE. THE BUILDING OWNER SHALL BE NOTIFIED OF ANY NONCONFORMING CONDITIONS.
2. REFER TO ASSOCIATED DIAGRAMS BELOW:

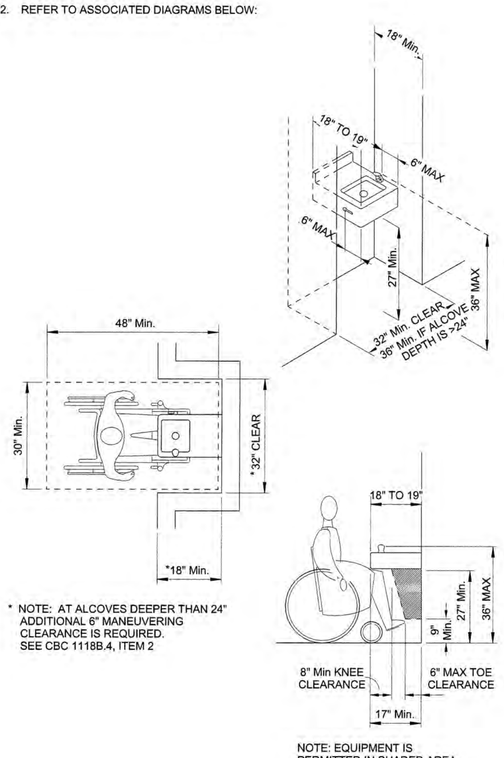

* NOTE: AT ALCOVES DEEPER THAN 24" ADDITIONAL 6" MANEUVERING CLEARANCE IS REQUIRED. SEE CBC 1118B.4, ITEM 2

NOTE: EQUIPMENT IS PERMITTED IN SHADED AREA

DRINKING FOUNTAIN CLEARANCES and LIMITATIONS — as per FIGURES 11B-3A and 11B-3B

TOILET ROOMS

1. CONTRACTOR TO VERIFY THAT ALL EXISTING SANITARY FACILITIES OF THE BASE BUILDING ON THE FLOOR OF THE PROJECT SCOPE OF WORK COMPLY WITH SECTION 1114B, 1115B, and 1133B/1134B OF THE 2010 CALIFORNIA BUILDING CODE. THE BUILDING OWNER SHALL BE NOTIFIED OF ANY NONCONFORMING CONDITIONS.
2. REFER TO ASSOCIATED DIAGRAMS BELOW:

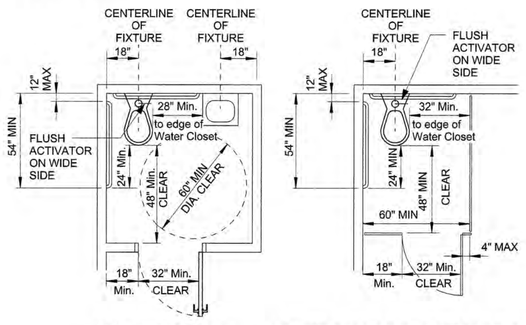

SINGLE-ACCOMMODATION TOILET FACILITY

ACCESSIBLE WATER CLOSET COMPARTMENT WITHIN A MULTIPLE-ACCOMMODATION TOILET FACILITY

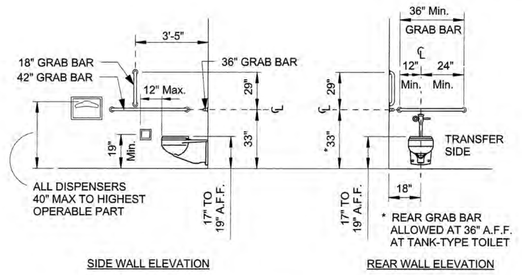

SIDE WALL ELEVATION

REAR WALL ELEVATION

TOILET FACILITY MINIMUM DIMENSIONS — as per FIGURE 11B-1A

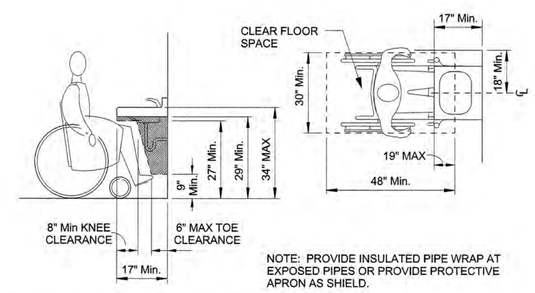

NOTE: PROVIDE INSULATED PIPE WRAP AT EXPOSED PIPES OR PROVIDE PROTECTIVE APRON AS SHIELD.

SINK KNEE CLEARANCE REQUIREMENTS — as per FIGURE 11B-1D

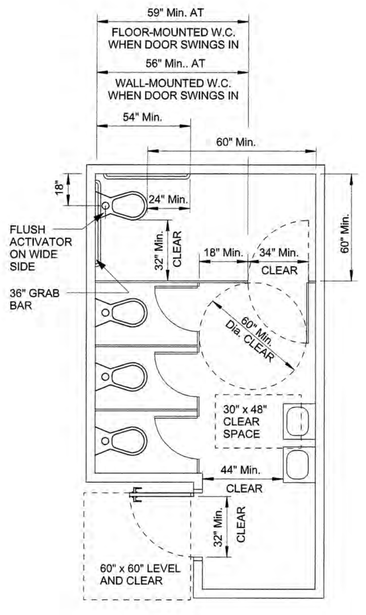

MULTIPLE-ACCOMMODATION TOILET FACILITY — as per FIGURE 11B-1B

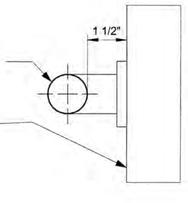

TYPICAL GRAB BAR PROFILE LIMITATIONS — as per FIGURE 11B-1C

Greenville
NORTH CAROLINA

JACOBS

333 Fayetteville Street, Suite 1100
Raleigh, NC 27601
PH: 919-334-3100 FX: 919-334-3122 www.jacobs.com
North Carolina Engineering Firm License No. F-267
North Carolina Architectural Firm Reg. No. 50757

AYERS SAINT GROSS

Consultants:

ARK Consulting Group, PLLC

Coaly Design
Landscape Architecture + Land Planning

Seals:

JOHN A. STEVERMER REGISTERED ARCHITECT 5858 NORTH CAROLINA DURHAM, N.C. 05-09-16

JOHN A. STEVERMER, NC LICENSE NO. 5858

General Notes:

Project Client:
CITY OF GREENVILLE

GREENVILLE TRANSPORTATION ACTIVITY CENTER
600 S. Pitt Street, Greenville, NC

Number	Description	Date
0	IFC	05-10-2016

Key Plan: Project North

CAD File:
Project No.: L3005900
Copyright: 2015 Jacobs Engineering Group

Drawing Sheet Title:
TYPICAL ACCESSIBILITY NOTES

Drawing Sheet Number:
G-004

Owner's Drawing Sheet No.:

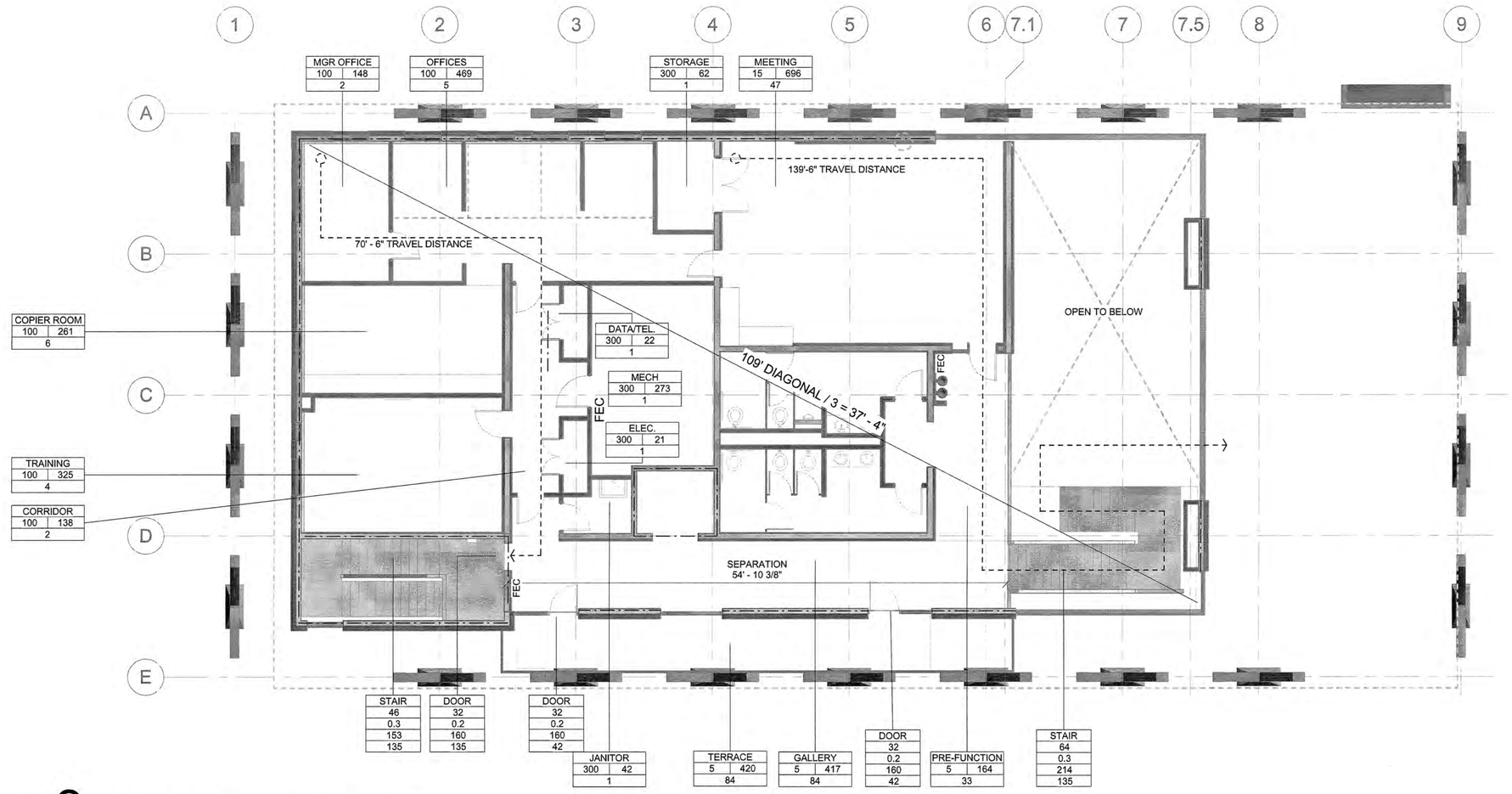

2 SECOND FLOOR

G-110 SCALE: 1/8" = 1'-0"

272 TOTAL OCCUPANTS

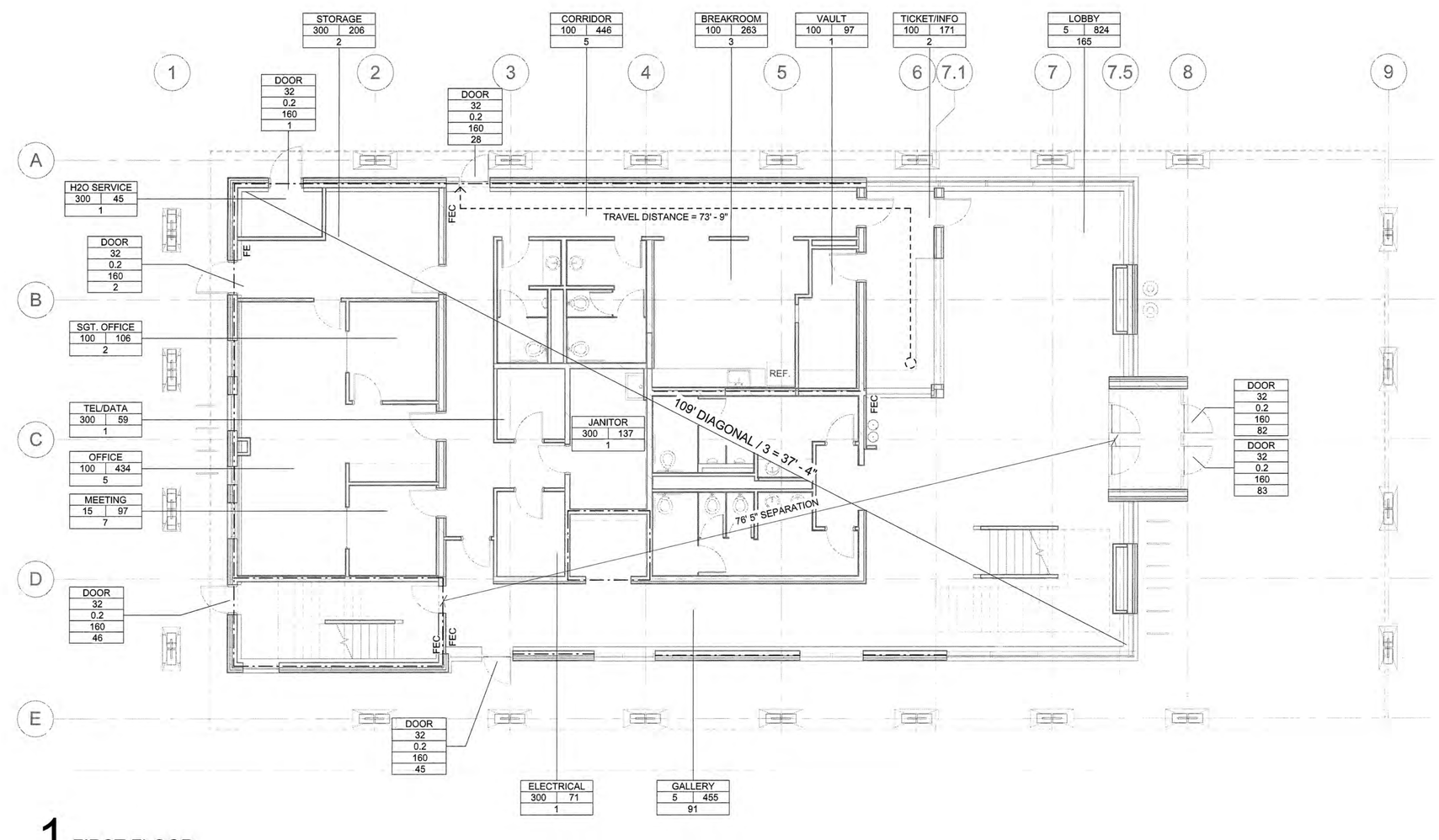

1 FIRST FLOOR

G-110 SCALE: 1/8" = 1'-0"

287 TOTAL OCCUPANTS

Greenville
NORTH CAROLINA

JACOBS

333 Fayetteville Street, Suite 1100
Raleigh, NC 27601
PH: 919-334-3100 FX: 919-334-3122 www.jacobs.com
North Carolina Engineering Firm License No. F-287
North Carolina Architectural Firm Reg. No. 50757

AYERS SAINT GROSS

Consultants:

ARK Consulting Group, PLLC

Coaly Design
Landscape Architecture + Land Planning

Seals:

JOHN A. STEVERMER REGISTERED ARCHITECT 5858 NORTH CAROLINA 05-09-16 DURHAM, N.C.

JOHN A. STEVERMER, NC LICENSE NO. 5858

General Notes:

1-HR FIRE RATED WALL LINE

TRAVEL DISTANCE

EGRESS TYPE	SPACE DESIGNATION	
CLEAR WIDTH (IN)	AREA PER OCCUPANT	SQUARE FOOTAGE
CLEAR WIDTH (IN/OCCUPANT)	NUMBER OF OCCUPANTS	
MAX ALLOWABLE LOAD		
ACTUAL LOAD		

Project Client:
CITY OF GREENVILLE

GREENVILLE TRANSPORTATION ACTIVITY CENTER

600 S. Pitt Street, Greenville, NC

Number	Description	Date
0	IFC	05-10-2016

Key Plan:

Project North

CAD File:

Project No.: L3005900

Copyright: 2015 Jacobs Engineering Group

Drawing Sheet Title:

LIFE SAFETY PLANS

Drawing Sheet Number:

G-110

Owner's Drawing Sheet No.:

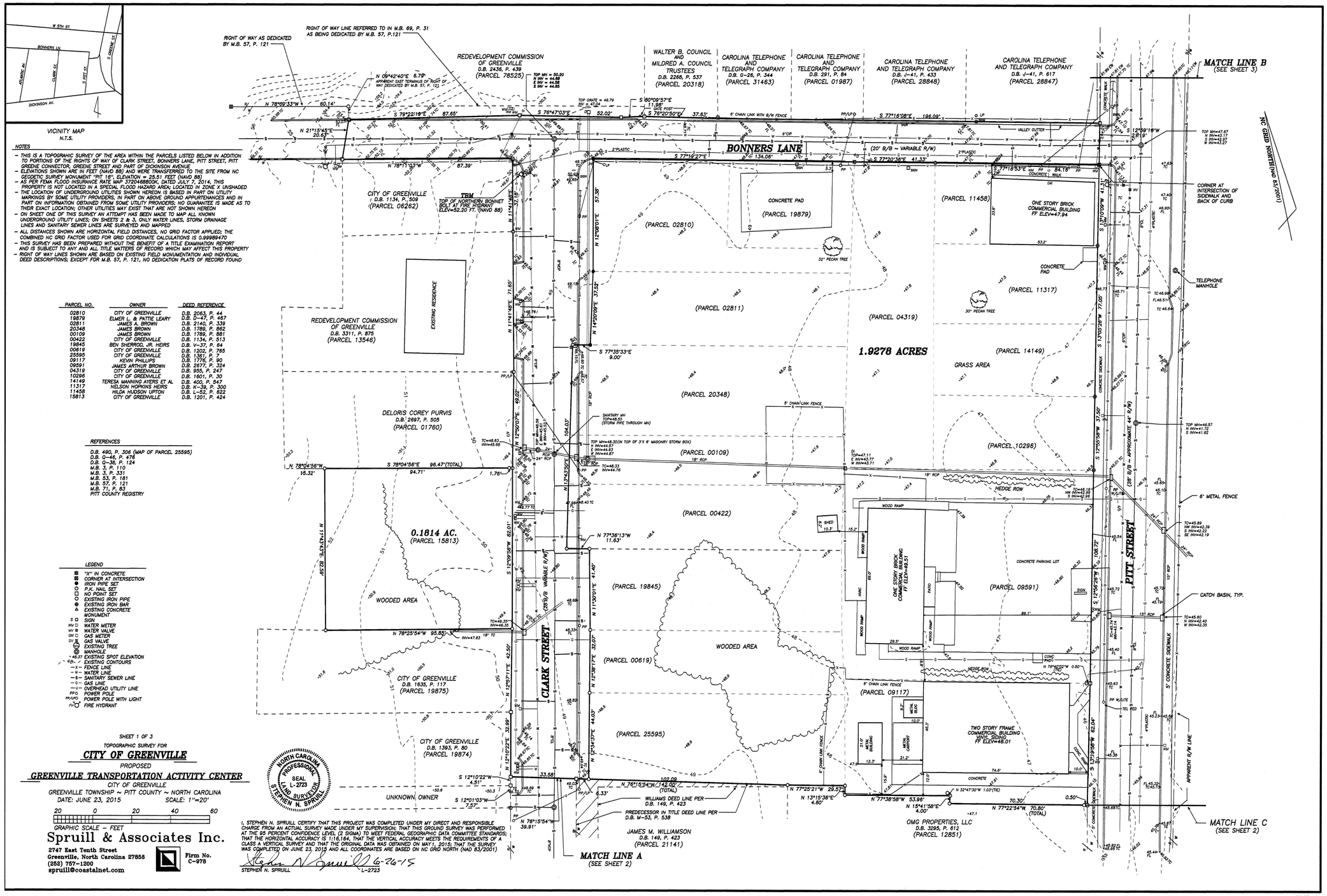

Greenville NORTH CAROLINA

JACOBS

333 Fayetteville Street
Suite 1100
Raleigh, NC 27601

www.jacobs.com

AYERS SAINT GROSS

Consultants:

Coaly Design
Landscape Architecture + Land Planning

ARK Consulting Group, PLLC
Engineers & Planners

3280 Charles Blvd. | Suite B
Greenville, NC 27858
(252) 558-0888
NC License: P-1199

Seals:

General Notes:

Project Client:
CITY OF GREENVILLE

GREENVILLE TRANSPORTATION ACTIVITY CENTER
600 S. Pitt Street, Greenville, NC

Number	Description	Date
0	IFC	05-10-2016

Key Plan:

Project North

CAD File:

Project No.: L3005900

Copyright: 2015 Jacobs Engineering Group

Drawing Sheet Title:

BOUNDARY & TOPOGRAPHIC SURVEY

Drawing Sheet Number:

V-1

Owner's Drawing Sheet No.:

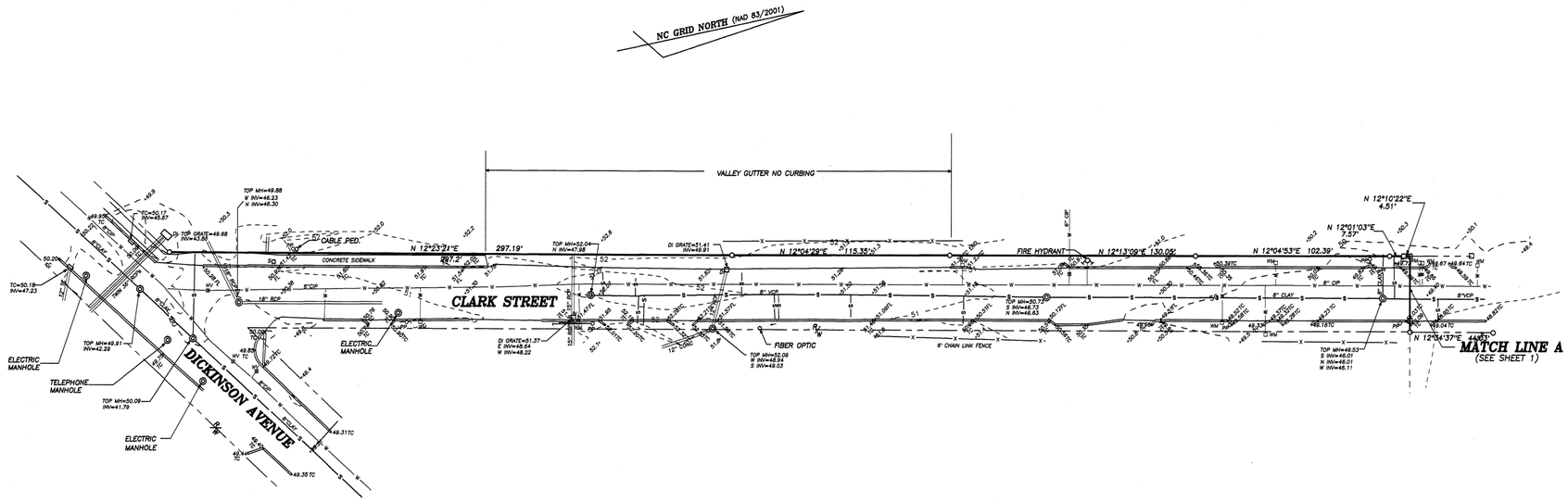

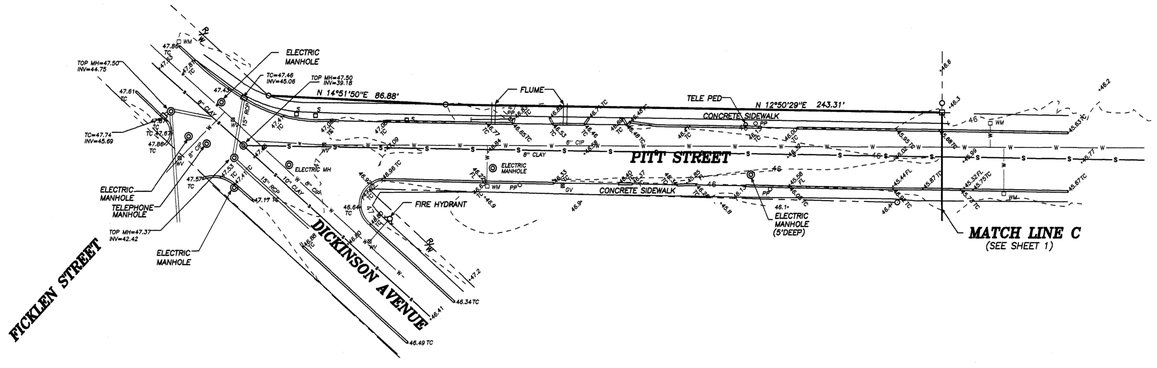

NORTH CAROLINA PROFESSIONAL SEAL L-2723 LAND SURVEYOR STEPHEN M. SPRUILL

6-26-15

SHEET 2 OF 3
TOPOGRAPHIC SURVEY FOR

CITY OF GREENVILLE

PROPOSED

GREENVILLE TRANSPORTATION ACTIVITY CENTER

CITY OF GREENVILLE

GREENVILLE TOWNSHIP ~ PITT COUNTY ~ NORTH CAROLINA

DATE: JUNE 23, 2015 SCALE: 1"=30'

Spruill & Associates Inc.
2747 East Tenth Street
Greenville, North Carolina 27858
(252) 757-1200
spruill@coastalnet.com
Firm No. C-978

150.37-2

150.37-2

Greenville NORTH CAROLINA

JACOBS
333 Fayetteville Street
Suite 1100
Raleigh, NC 27601
www.jacobs.com

AYERS SAINT GROSS

Consultants:

Coaly Design
Landscape Architecture + Land Planning

ARK Consulting Group, PLLC
Engineers & Planners
3280 Charles Blvd. | Suite B
Greenville, NC 27858
(252) 558-0888
NC License: P-1199

Seals:

General Notes:

Project Client:
CITY OF GREENVILLE

GREENVILLE TRANSPORTATION ACTIVITY CENTER
600 S. Pitt Street, Greenville, NC

Number	Description	Date
0	IFC	05-10-2016

Key Plan:

Project North

CAD File:

Project No.: L3005900

Copyright: 2015 Jacobs Engineering Group

Drawing Sheet Title:

BOUNDARY & TOPOGRAPHIC SURVEY

Drawing Sheet Number:

V-2

Owner's Drawing Sheet No.:

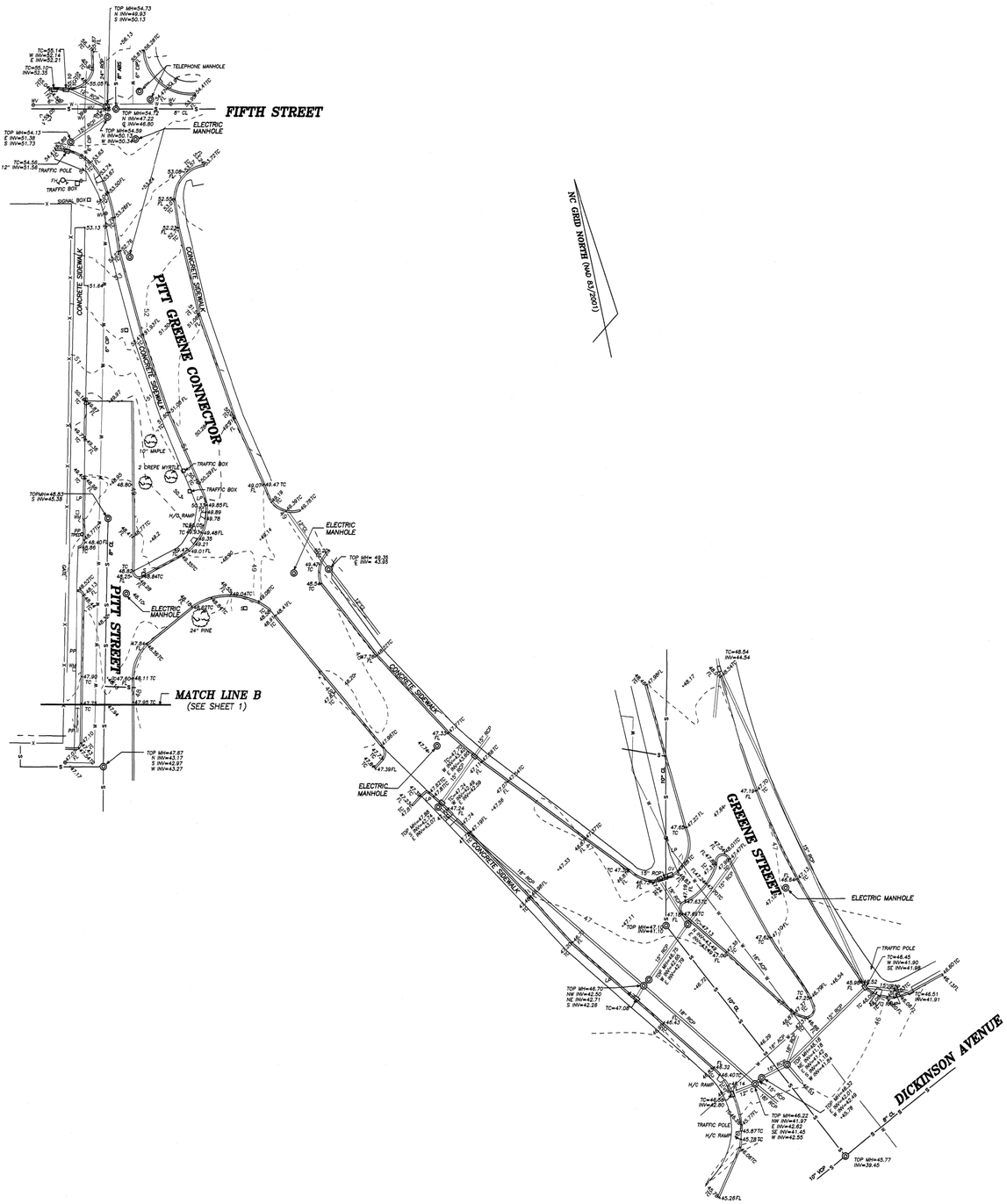

NORTH CAROLINA PROFESSIONAL SEAL L-2723 LAND SURVEYOR STEPHEN N. SPRUILL

6-26-15

SHEET 3 OF 3

TOPOGRAPHIC SURVEY FOR

CITY OF GREENVILLE

PROPOSED

GREENVILLE TRANSPORTATION ACTIVITY CENTER

CITY OF GREENVILLE

GREENVILLE TOWNSHIP ~ PITT COUNTY ~ NORTH CAROLINA

DATE: JUNE 23, 2015 SCALE: 1"=30'

30 0 30 60 90

GRAPHIC SCALE – FEET

Spruill & Associates Inc.

2747 East Tenth Street
Greenville, North Carolina 27858
(252) 757-1200
spruill@coastalnet.com

Firm No. C-978

150.37-3

150.37-3

Greenville NORTH CAROLINA

JACOBS

333 Fayetteville Street
Suite 1100
Raleigh, NC 27601

www.jacobs.com

AYERS SAINT GROSS

Consultants:

Coaly Design
Landscape Architecture + Land Planning

ARK Consulting Group, PLLC
Engineers & Planners

3280 Charles Blvd. | Suite B
Greenville, NC 27858
(252) 558-0888
NC License: P-1199

Seals:

General Notes:

Project Client:
CITY OF GREENVILLE

GREENVILLE TRANSPORTATION ACTIVITY CENTER
600 S. Pitt Street, Greenville, NC

Number	Description	Date
0	IFC	05-10-2016

Key Plan:

Project North

CAD File:

Project No.: L3005900

Copyright: 2015 Jacobs Engineering Group

Drawing Sheet Title:

BOUNDARY & TOPOGRAPHIC SURVEY

Drawing Sheet Number:

V-3

Owner's Drawing Sheet No.:

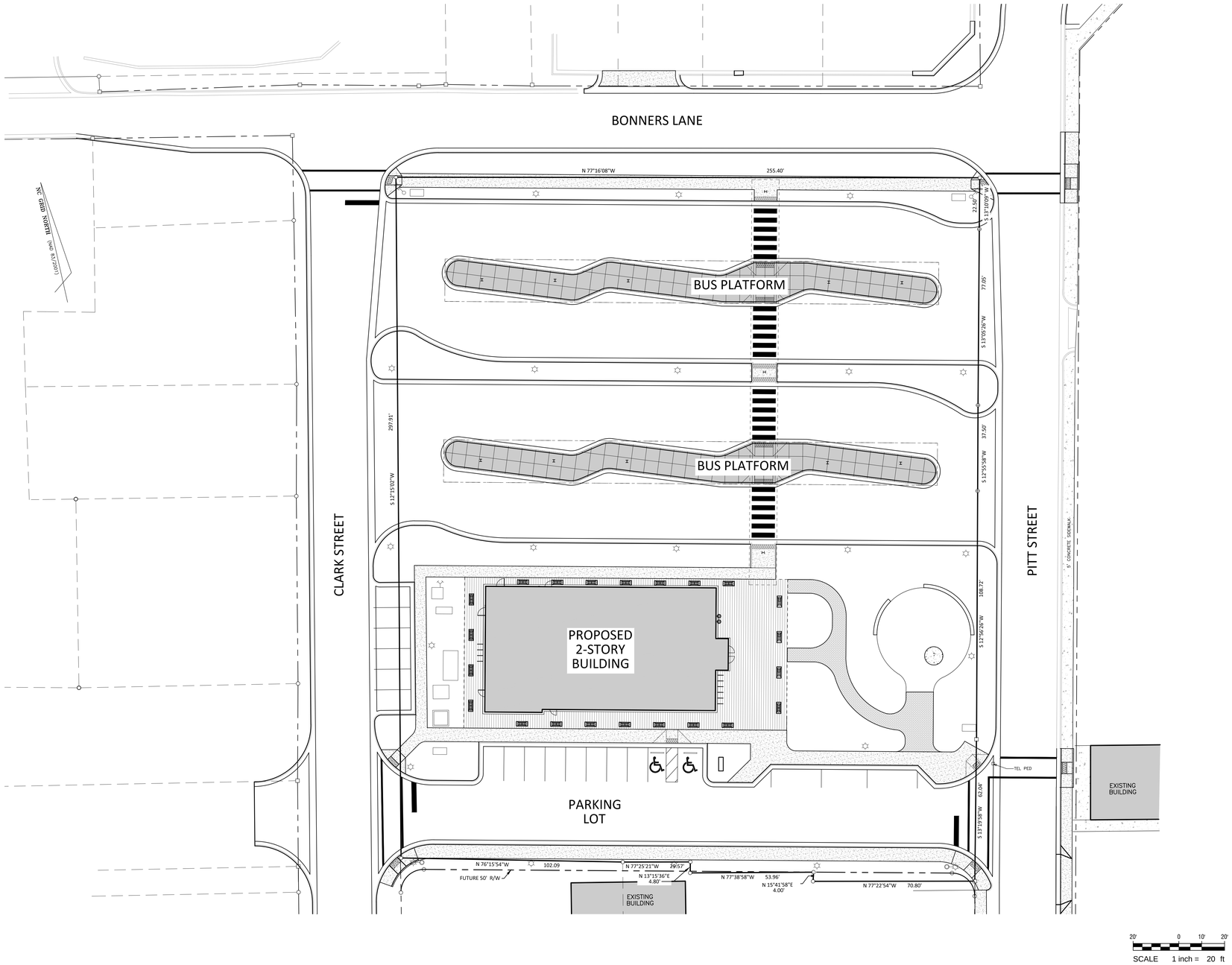

20' 0 10' 20'

SCALE 1 inch = 20 ft

Site Data

TOTAL ACREAGE IN SITE:	1.76± AC.
TAX MAP NUMBER:	4688.20, 4688.21
TAX PARCEL NUMBER:	02810, 02811, 20348, 00109, 00422, 19845, 00619, 25595, 09117, 09591, 10296, 14149, 11317, 11458, 04319, 19879
CURRENT ZONING:	CD
ACREAGE IN COMMON AREA:	0.0
ACREAGE IN RECREATION AREA(S) AND THE LIKE:	0.0
TOTAL NUMBER OF UNITS / BEDROOMS:	N/A
GROSS FLOOR AREA:	9,500± S.F
BUILDING LOT COVERAGE:	16.3% EXIST., 7.0% PROPOSED
BUILDING HEIGHT IN FT. & STORIES:	25' (2 STORY)
TOTAL NO. OF PARKING SPACES REQUIRED:	0 SPACES
TOTAL NO. OF PROPOSED PARKING SPACES:	19 SPACES (INCL. 2 HC)
TOTAL SQ. FEET OF EXIST. IMPERVIOUS AREA:	30,197 SF
TOTAL SQ. FEET OF PROP. IMPERVIOUS AREA:	61,343 SF
IMPERVIOUS AREA FOR PARKING:	42,258 SF
DISTURBED ACREAGE:	4.0 AC.
ADDRESS:	600 PITT STREET

General Notes:

1. CITY OF GREENVILLE DRIVEWAY APPROVAL PERMIT REQUIRED.
2. ANY UNUSED DRIVEWAYS MUST BE CLOSED IN ACCORDANCE WITH THE CITY OF GREENVILLE'S DRIVEWAY ORDINANCE.
3. CONTACT NORTH CAROLINA ONE-CALL CENTER, INC. (NC ONE-CALL) AT 811 TO HAVE ALL UNDERGROUND UTILITIES LOCATED PRIOR TO EXCAVATING OR TRENCHING.
4. ALL REQUIRED IMPROVEMENTS SHALL CONFORM TO THE CITY OF GREENVILLE MANUAL OF STANDARD DESIGNS AND DETAILS (MSDD) AND THE GREENVILLE UTILITIES MANUAL FOR THE DESIGN AND CONSTRUCTION OF WATER AND WASTEWATER SYSTEM EXTENSIONS.
5. CONTRACTOR SHALL NOTIFY PUBLIC WORKS, STREET MAINTENANCE DIVISION 48 HOURS PRIOR TO MAKING CONNECTIONS TO EXISTING STORM DRAINS LOCATED WITHIN PUBLIC STORM DRAINAGE EASEMENTS OR RIGHT-OF-WAY.
6. THIS PROPERTY IS LOCATED IN A FLOOD ZONE X (AREA DETERMINED TO BE OUTSIDE THE 0.2% ANNUAL CHANCE FLOOD PLAIN), AS SHOWN ON THE FEMA FLOOD INSURANCE RATE MAP NUMBER 3720468800K, EFFECTIVE JULY 7, 2014.
7. ELECTRIC AND TELEPHONE UTILITIES SHALL BE INSTALLED UNDERGROUND.
8. REFER TO ARCHITECTURAL PLANS FOR BUILDING DIMENSIONS.
9. REFER TO M.E.P. PLANS FOR COORDINATION OF BUILDING UTILITY SERVICES.
10. STORMWATER MANAGEMENT PLAN APPROVAL REQUIRED FOR THIS SITE.
11. THIS SITE DISTURBS MORE THAN 1 ACRE. EROSION CONTROL PLAN APPROVAL IS REQUIRED.
12. REFUSE COLLECTION SHALL BE PROVIDED BY PRIVATE SERVICE.
13. SITE SHALL MEET ALL RELATED ACCESSIBILITY CODE REQUIREMENTS.

SURVEY NOTE:

SURVEY INFORMATION SHOWN HEREON WAS TAKEN FROM A SURVEY PREPARED BY SPRUILL & ASSOCIATES, INC. ENTITLED *TOPOGRAPHIC SURVEY FOR CITY OF GREENVILLE PROPOSED GREENVILLE TRANSPORTATION ACTIVITY CENTER*, DATED JUNE 23, 2015.

SHEET INDEX

Sheet No. C-1	Cover Sheet
Sheet No. C-2	Demolition Plan
Sheet No. C-3	Erosion Control Plan
Sheet No. C-4	Site Layout Plan
Sheet No. C-5	Site Utility Plan
Sheet No. C-6	Grading and Drainage Plan
Sheet No. C-7	Pitt Street and Pitt-Greene Connector
Sheet No. C-8	Pitt Street and Clark Street
Sheet No. C-9	Water Main Replacement
Sheet No. C-10	Water Main Replacement (Pitt & Clark St.)
Sheet No. C-11	Details
Sheet No. C-12	Details
Sheet No. C-13	Details
Sheet No. C-14	Details

Owner / Developer

CITY OF GREENVILE
1500 BEATTY STREET
GREENVILLE, NC 27834
PHONE: (252) 329-4522

Greenville
NORTH CAROLINA

JACOBS
333 Fayeteeville Street
Suite 1100
Raleigh, NC 27601
www.jacobs.com

AYERS SAINT GROSS

Consultants:

Coaly Design
Landscape Architecture + Land Planning

ARK Consulting Group, PLLC
Engineers & Planners
3280 Charles Blvd. | Suite B
Greenville, NC 27858
(252) 558-0888
NC License: P-1199

Seals:

NORTH CAROLINA PROFESSIONAL SEAL 28425 ENGINEER SCOTT T. ANDERSON
9/10/2016

SCOTT T. ANDERSON, P.E., LICENSE NO. 28425

General Notes:

Project Client:
CITY OF GREENVILLE

GREENVILLE TRANSPORTATION ACTIVITY CENTER
600 S. Pitt Street, Greenville, NC

Number	Description	Date
0	IFC	05-10-2016

Key Plan: Project North

CAD File:
Project No.: L3005900
Copyright: 2015 Jacobs Engineering Group

Drawing Sheet Title:
COVER SHEET

Drawing Sheet Number:
C-1

Owner's Drawing Sheet No.:
Ark Drawing No. E-1004

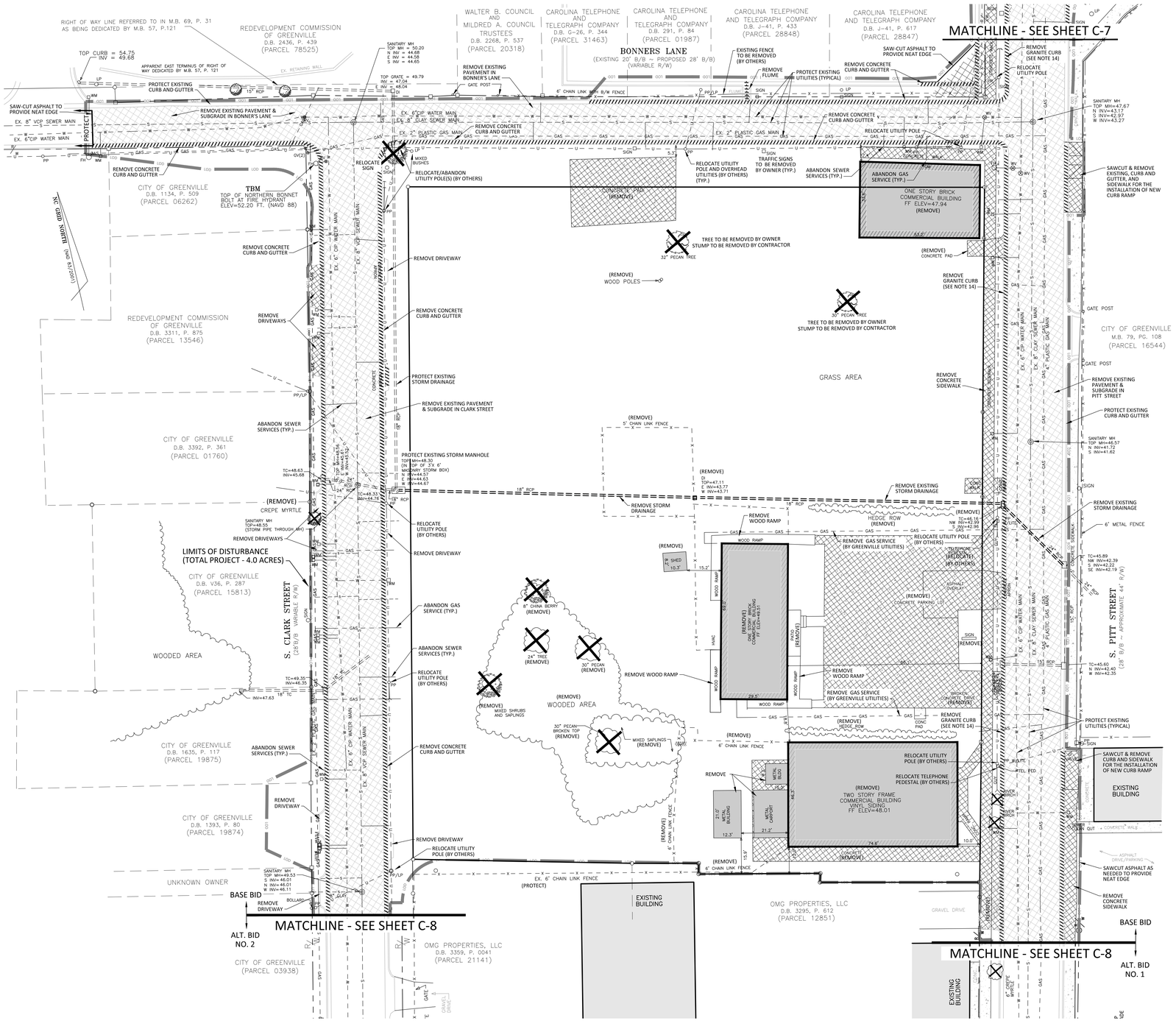

Legend

- "X" IN CONCRETE
- CORNER AT INTERSECTION
- IRON PIPE SET
- P.K. NAIL SET
- NO POINT SET
- EXISTING IRON PIPE
- EXISTING IRON BAR
- CONCRETE MONUMENT
- SIGN
- WATER METER
- WATER VALVE
- GAS METER
- GAS VALVE
- EXISTING TREE
- MANHOLE
- 48.57 EXISTING SPOT ELEVATION
- EXISTING CONTOURS
- POWER POLE
- POWER POLE WITH LIGHT
- FIRE HYDRANT
- PROPERTY LINE
- STORM DRAIN
- FENCE LINE
- WATER LINE
- SANITARY SEWER LINE
- GAS LINE
- OVERHEAD UTILITY LINE
- ROOF DRAIN
- UNDERGROUND ELECTRIC
- FIRE MAIN
- CONDUIT
- DEMO / TO BE REMOVED
- TREE LINE / VEGETATION
- LIMITS OF DISTURBANCE
- TEMPORARY DIVERSION DITCH
- BACK OF CURB
- TOP OF CONCRETE
- TOP OF ISLAND
- TOP OF PAVEMENT
- SPILL GUTTER
- TRUNCATED DOMES
- CATCH BASIN
- DEMO / TO BE REMOVED
- ROCK INLET SEDIMENT TRAP
- TREE/SHRUB DEMO/REMOVAL
- CONCRETE
- BACTERIOLOGICAL SAMPLE POINT

Demolition Notes:

1. CONTRACTOR SHALL CONTACT NORTH CAROLINA ONE-CALL CENTER (NC 811) BY DIALING 811 OR 1-800-632-4949 AT LEAST 72 HOURS IN ADVANCE OF ANY LAND DISTURBING ACTIVITY OR DIGGING AND HAVE ALL UNDERGROUND UTILITIES LOCATED PRIOR TO EXCAVATING OR TRENCHING.
2. THE CONTRACTOR IS RESPONSIBLE FOR OBTAINING ALL LOCAL AND STATE PERMITS REQUIRED FOR DEMOLITION WORK.
3. THE CONTRACTOR SHALL INDEMNIFY AND HOLD HARMLESS THE OWNER AND/OR ENGINEER FOR ANY AND ALL INJURIES AND/OR DAMAGES TO PERSONNEL, EQUIPMENT AND/OR EXISTING FACILITIES IN THE DEMOLITION AND CONSTRUCTION DESCRIBED IN THE PLANS AND SPECIFICATIONS.
4. EXISTING CONDITIONS AS DEPICTED ON THESE PLANS ARE GENERAL AND ILLUSTRATIVE IN NATURE AND DO NOT INCLUDE ALL MECHANICAL, ELECTRICAL AND MISCELLANEOUS STRUCTURES. IT IS THE RESPONSIBILITY OF THE CONTRACTOR TO EXAMINE THE SITE AND BE FAMILIAR WITH EXISTING CONDITIONS PRIOR TO BIDDING ON THE DEMOLITION WORK FOR THIS PROJECT. IF CONDITIONS ENCOUNTERED DURING EXAMINATION ARE SIGNIFICANTLY DIFFERENT THAN THOSE SHOWN, THE CONTRACTOR SHALL NOTIFY THE ENGINEER IMMEDIATELY.
5. ALL DEMOLITION WASTE AND DEBRIS SHALL BE REMOVED BY THE CONTRACTOR AND DISPOSED OF IN A STATE APPROVED WASTE SITE AND IN ACCORDANCE WITH ALL LOCAL AND STATE CODES AND PERMIT REQUIREMENTS.
6. THE BURNING OF CLEARED MATERIAL AND DEBRIS SHALL NOT BE ALLOWED UNLESS CONTRACTOR GETS WRITTEN AUTHORIZATION FROM THE LOCAL AUTHORITIES.
7. ASBESTOS OR HAZARDOUS MATERIALS, IF FOUND ON SITE, SHALL BE REMOVED BY A LICENSED HAZARDOUS MATERIALS CONTRACTOR. CONTRACTOR SHALL NOTIFY OWNER IMMEDIATELY IF HAZARDOUS MATERIALS ARE ENCOUNTERED.
8. CONTRACTOR SHALL PROTECT ALL CORNER PINS, MONUMENTS, PROPERTY CORNERS, AND BENCHMARKS DURING DEMOLITION ACTIVITIES. IF DISTURBED, CONTRACTOR SHALL HAVE DISTURBED ITEMS RESET BY A LICENSED SURVEYOR AT NO ADDITIONAL COST TO THE OWNER.
9. CONTRACTOR SHALL ADHERE TO ALL LOCAL, STATE, FEDERAL, AND OSHA REGULATIONS WHEN OPERATING DEMOLITION EQUIPMENT AROUND UTILITIES.
10. CONTRACTOR SHALL PROVIDE AND MAINTAIN TRAFFIC CONTROL MEASURES IN ACCORDANCE WITH THE NCDOT STANDARDS, AND AS REQUIRED BY LOCAL AGENCIES WHEN WORKING IN AND/OR ALONG STREETS, ROADS, HIGHWAYS, ETC. IT SHALL BE THE CONTRACTOR'S RESPONSIBILITY TO OBTAIN APPROVAL AND COORDINATE WITH THE LOCAL AND/OR STATE AGENCIES REGARDING THE NEED, EXTENT, AND LIMITATIONS ASSOCIATED WITH INSTALLING AND MAINTAINING TRAFFIC CONTROL MEASURES.
11. CONTRACTOR SHALL PROTECT AT ALL TIMES ADJACENT STRUCTURES AND ITEMS FROM DAMAGE DUE TO DEMOLITION OR CONSTRUCTION ACTIVITIES.
12. CONTRACTOR SHALL REMOVE EXISTING VEGETATION AND IMPROVEMENTS WITHIN LIMITS OF DISTURBANCE UNLESS NOTED OTHERWISE.
13. TREES OUTSIDE OF CONSTRUCTION LIMITS OR TREES NOT INDICATED TO BE REMOVED SHALL BE PROTECTED.
14. EXISTING GRANITE CURB ALONG THE WEST SIDE OF PITT STREET SHALL BE STOCKPILED, DELIVERED, AND NEATLY STACKED AS DIRECTED BY THE OWNER AT THE CITY OF GREENVILLE PUBLIC WORKS DEPARTMENT MATERIAL STORAGE YARD LOCATED AT 1500 BEATTY STREET, GREENVILLE, NC.

Construction Sequence

1. INSTALL PERIMETER SILT FENCE AND TEMPORARY GRAVEL CONSTRUCTION ENTRANCES.
2. INSTALL INLET PROTECTION AROUND EXISTING STORM DRAINAGE STRUCTURES.
3. INSTALL SEDIMENT SKIMMER BASIN #1 AND TEMPORARY DIVERSION DITCHES.
4. PERFORM DEMOLITION OF EXISTING BUILDINGS AND ON-SITE IMPROVEMENTS.
5. PERFORM ROUGH GRADING.
6. INSTALL BUILDING PAD.
7. BEGIN BUILDING CONSTRUCTION.
8. INSTALL UTILITIES AND STORM DRAINAGE.
9. INSTALL INLET PROTECTION AROUND NEW STORM DRAINAGE STRUCTURES.
10. INSTALL CURB & GUTTER.
11. INSTALL SITE LIGHTING.
12. PLACE AND FINE GRADE STONE BASE.
13. REMOVE TEMPORARY SEDIMENT SKIMMER BASIN #1 AND TEMPORARY DIVERSION DITCHES.
14. PERFORM ROAD & UTILITY IMPROVEMENTS.
15. PLACE ASPHALT & CONCRETE PAVEMENT.
16. INSTALL SITE LANDSCAPING.
17. PERFORM PAINT STRIPING.

SCALE 1 inch = 20 ft

Greenville NORTH CAROLINA

JACOBS
333 Fayetteville Street
Suite 1100
Raleigh, NC 27601
www.jacobs.com

AYERS SAINT GROSS

Consultants:
Coaly Design
Landscape Architecture + Land Planning

ARK Consulting Group, PLLC
Engineers & Planners
3280 Charles Blvd. | Suite B
Greenville, NC 27858
(252) 558-0888
NC License: P-1199

Seals:
NORTH CAROLINA PROFESSIONAL SEAL 28425 ENGINEER SCOTT T. ANDERSON
9/10/2016

SCOTT T. ANDERSON, P.E., LICENSE NO. 28425

General Notes:

Project Client:
CITY OF GREENVILLE

GREENVILLE TRANSPORTATION ACTIVITY CENTER

600 S. Pitt Street, Greenville, NC

Number	Description	Date
0	IFC	05-10-2016

Key Plan: Project North

CAD File:
Project No.: L3005900
Copyright: 2015 Jacobs Engineering Group

Drawing Sheet Title:
DEMOLITION PLAN

Drawing Sheet Number:
C-2

Owner's Drawing Sheet No.:
Ark Drawing No. E-1004

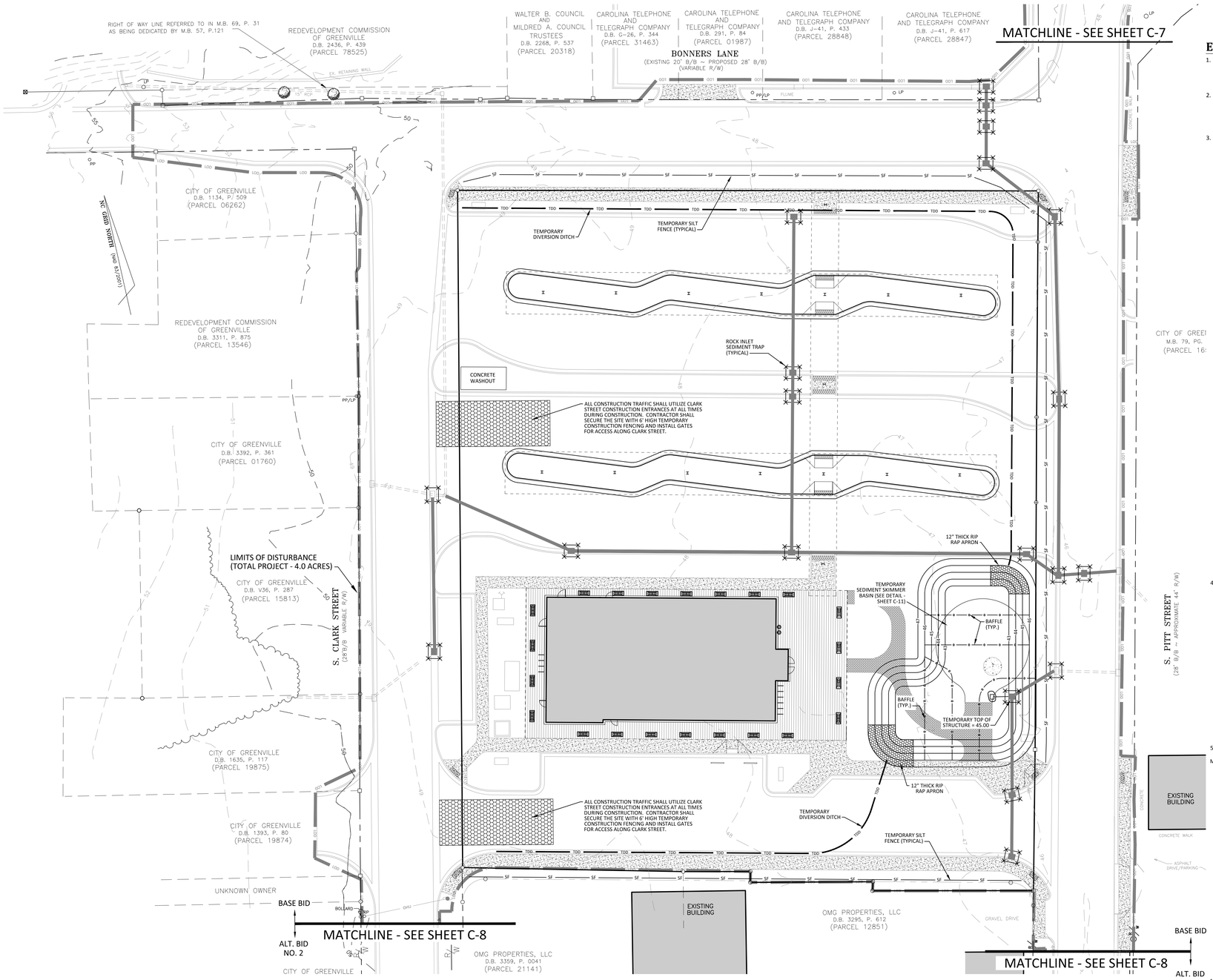

Erosion Control Measures:

1. All work will be done in accordance with the Erosion and Sedimentation Control Act of 1973 and the NC Department of Environment and Natural Resources. No land disturbing activity beyond that required to install the appropriate erosion control measures may proceed until measures are inspected and approved by the Owner or Engineer.

2. Prior to beginning demolition, temporary silt fence shall be installed as shown on the construction drawings. Disturbed areas as part of the surcharge installation work shall be stabilized prior to beginning subsequent work. Rock Inlet Sediment Traps shall be placed around all drainage structures as they are installed to collect surface runoff and control siltation and release water at a gradual rate.

3. Parking lots shall have stone base placed on them for stabilization and shoulders shall be seeded to stabilize the soil. Seed bed preparation shall be conducted according to North Carolina Department of Transportation Standard Specifications for Roads and Structures (D.O.T.). The ground surface shall be cleared of stumps, stones, roots, cables, wire, grade stakes, and other materials that might hinder proper grading, tillage, seeding or subsequent maintenance operations. Grades on the area to be seeded shall be maintained in a true and even condition. Maintenance shall include any necessary repairs to previously graded areas. All graded areas shall be thoroughly tilled to a depth of at least four (4) inches by plowing, disking, harrowing, or other approved methods until the condition of the soil is acceptable. On sites where soil conditions are such that high clay content and excessive compaction cause difficulty in getting clods and lumps effectively pulverized, the Contractor shall use the rotary tillage machinery until the mixing of the soil is acceptable and no clods or clumps remain larger than 1 1/2 inches in diameter. A firm and compact seed bed is required and after being graded, the seed bed shall be lightly compacted with a land roller, such as a cultipacker, before and after seeding. Limestone shall be dolomitic agriculture ground limestone containing not less than 10 percent magnesium oxide. Lime shall be uniformly applied at the rate of 2 tons per acre. Fertilizer shall be uniformly applied at a rate of 500 pounds per acre of 10-20-20 analysis. The fertilizer shall be incorporated into the upper three or four inches of prepared seed bed just prior to the last tillage operation, but in no case shall it be applied more than three days prior to seeding. Fertilizer shall be used immediately after delivery or stored in a manner that will not permit it to harden or destroy its effectiveness.

   When hydroseeding equipment is used for seeding, fertilizer shall be applied simultaneously with seed, using the above rates of application. Seed shall be certified seed or equivalent based on North Carolina Seed Improvement Association requirements for certification. All seed shall be furnished in sealed standard containers. Seed which has become wet, moldy, or otherwise damaged prior to seeding will not be acceptable. Seeding shall be accomplished with hand planters, power- drawn planters, hand packers, or hydroseeding equipment at the following rates:

Permanent Seeding Schedule (Entire Site):

Seed Bed Preparation
Lime - 2 tons per acre
Fertilizer (10-20-20) - 500 pounds per acre

Seeding Mixture:
(January 1 - March 31)
Common Bermuda grass (unhulled) - 20 pounds per acre
Rye (grain) - 25 pounds per acre

(April 1 - July 31)
Common bermudagrass (hulled) - 15 pounds per acre
Weeping Lovegrass - 5 pounds per acre
Centipede - 8 pounds per acre

(August 1 - December 31)
Common Bermuda grass (unhulled) - 20 pounds per care
Tall Fescue - 60 pounds per acre
Rye (grain) - 25 pounds per acre

Seed Bed Protection:
Straw Mulch - 2 tons per acre (visual)
Asphalt Tack - 0.03 gallons per square yard

4. Ground Stabilization (Per NCG010000)
   a. Soil stabilization shall be achieved on any area of a site where land-disturbing activities have temporarily or permanently ceased according to the following schedule:
      i. All perimeter dikes, swales, ditches, perimeter slopes and all slopes steeper than 3 horizontal to 1 vertical (3:1) shall be provided temporary or permanent stabilization with ground cover as soon as practicable but in any event within 7 calendar days from the last land-disturbing activity.
      ii. All other disturbed areas shall be provided temporary or permanent stabilization with ground cover as soon as practicable but in any event within 14 calendar days from the last land-disturbing activity.
   b. Conditions - In meeting the stabilization requirements above, the following conditions or exemptions shall apply:
      i. Extensions of time may be approved by the permitting authority based on weather or other site-specific conditions that make compliance impracticable.
      ii. All slopes 50' in length or greater shall apply the ground cover within 7 days except when the slope is flatter than 4:1. Slopes less than 50' shall apply ground cover within 14 days except when slopes are steeper than 3:1, the 7 day-requirement applies.
      iii. Any sloped area flatter than 4:1 shall be exempt from the 7-day ground cover requirement.
      iv. Slopes 10' or less in length shall be exempt from the 7-day ground cover requirement except when the slope is steeper than 2:1.
      v. Although stabilization is usually specified as ground cover, other methods, such as chemical stabilization, may be allowed on a case-by-case basis.
      vi. For portions of projects within one mile and draining to trout waters and High Quality Waters as classified by the Environmental Management Commission, stabilization with ground cover shall be achieved as soon as practicable but in any event on all areas of the site within 7 calendar days from the last land-disturbing act.
      vii. For portions of projects located in Outstanding Resource Waters watersheds as classified by the Environmental Management Commission, stabilization with ground cover shall be achieved as soon as practicable but in any event on all areas within 7 calendar days from the last land-disturbing act.
      viii. Portions of a site that are lower in elevation than adjacent discharge locations and are not expected to discharge during construction may be exempt from the temporary ground cover requirements if identified on the approved E&SC plan or added by the permitting authority.

5. Self Inspection and Reporting Requirements (Per NCG010000)

Minimum self inspection and reporting requirements are as follows unless otherwise approved in writing by the Division of Water Quality.
   a. A rain gauge shall be maintained in good working order on the site unless another rain monitoring device has been approved by the permitting authority.
   b. A written record of the daily rainfall amounts shall be retained and all records shall be made available to DWQ or authorized agent upon request (Note: if no rainfall occurred, the permittee must record "zero").
   c. Erosion and sedimentation control measures shall be inspected to ensure that they are operating correctly. Inspection records must be maintained for each inspection event and for each measure. At a minimum, inspection of measures must occur at the frequency indicated below:
      i. All erosion and sedimentation control measures must be inspected by or under the direction of the permittee at least once every seven calendar days, and
      ii. All erosion and sediment control measures must be inspected by or under the direction of the permittee within 24 hours after any storm event of greater than 0.50 inches of rain per 24 hour period.
      iii. Times when a determination that adverse weather conditions prevented inspections should be documented on the Inspection Record.
   d. Once land disturbance has begun on the site, stormwater runoff discharge outfalls shall be inspected by observation for erosion, sedimentation and other stormwater discharge characteristics such as clarity, floating solids, and oil sheens. Inspections of the outfalls shall be made at least once every seven calendar days and within 24 hours after any storm event of greater than 0.50 inches of rain per 24 hour period.
   e. Inspections are only required to be made during normal business hours. When adverse weather conditions would cause the safety of the inspection personnel to be in jeopardy, the inspection can be delayed until it is deemed safe to perform these duties. If the inspection cannot be done on that day, it must be completed on the following business day.
   f. Twenty-four Hour Reporting for visible sediment deposition
   i. The permittee shall report to the Division of Water Quality central office or the appropriate regional office any visible sediment being deposited in any stream or wetland or any noncompliance which may endanger health or the environment. (See Section IX of this permit for contact information.) Any information shall be provided orally or electronically within 24 hours from the time the permittee became aware of the circumstances. Visible discoloration or suspended solids in the effluent should be recorded on the Inspection Record as provided below.
      ii. A written submission shall be provided to the appropriate regional office of the DWQ within 5 days of the time the permittee becomes aware of the circumstances. The written submission shall contain a description of the sediment deposition and actions taken to address the cause of the deposition. The Division of Water Quality staff may waive the requirement for a written report on a case-by-case basis.
   g. Records of inspections made during the previous 30 days shall remain on the site and available for agency inspectors at all times during normal working hours, unless the permitting authority provides a site-specific exemption based on unique site conditions that make this requirement not practical. Older records must be maintained for a period of one year after project completion and made available upon request. The records must provide the details of each inspection including observations, and actions taken in accordance with this permit. The permittee shall record the required rainfall and monitoring observations on the "Inspection Record for Activities Under Stormwater General Permit NCG010000" form provided by the Division or a similar inspection form that is inclusive of all of the elements contained in the Division's form. Electronic storage of records will be allowed if approved by the permitting authority.
   h. Inspection records must include, at a minimum, the following:
      i. Control Measure Inspections: Inspection records must include at a minimum:
1. identification of the measures inspected,
2. date and time of the inspection,
3. name of the person performing the inspection,
4. indication of whether the measures were operating properly,
5. description of maintenance needs for the measure,
6. corrective actions taken and
7. date of actions taken.
      ii. Stormwater Discharge Inspections: Inspection records must include at a minimum:
1. identification of the discharge outfall inspected,
2. date and time of the inspection,
3. name of the person performing the inspection,
4. evidence of indicators of stormwater pollution such as oil sheen, floating or suspended solids or discoloration,
5. indication of visible sediment leaving the site,
6. actions taken to correct/prevent sedimentation and
7. date of actions taken.
      iii. Visible Sedimentation Found Outside the Site Limits: Inspection records must include:
1. an explanation as to the actions taken to control future releases,
2. actions taken to clean up or stabilize the sediment that has left the site limits and
3. the date of actions taken.
      iv. Visible Sedimentation Found in Streams or Wetlands: All inspections should include evaluation of streams or wetlands onsite or offsite (where accessible) to determine if visible sedimentation has occurred.
      i. Visible Stream Turbidity - If the discharge from a site results in visible stream turbidity, inspection records must record that evidence and actions taken to reduce sediment contributions. Sites discharging to streams named on the state's 303(d) list as impaired for sediment-related causes may be required to perform additional monitoring, inspections or application of more-stringent management practices if it is determined that the additional requirements are needed to assure compliance with the federal or state impaired-waters conditions. If a discharge covered by this permit enters a stream segment that is listed on the Impaired Stream List for sediment-related causes, and a Total Maximum Daily Load (TMDL) has been prepared for those pollutants, the permittee must implement measures to ensure that the discharge of pollutants from the site is consistent with the assumptions and meets the requirements of the approved TMDL. The DWQ 303(d) list can be found at: http://h2o.enr.state.nc.us/tmdl/General_303d.htm/

6. All erosion and sedimentation control devices shall remain in place and be maintained by the Contractor until all seeding is established and construction areas have been stabilized.

7. Temporary Seeding - Seed in accordance with Soil Conservation Service recommendations with regard to seed type, rate of application, fertilizer, etc.

Legend

- "X" IN CONCRETE
- CORNER AT INTERSECTION
- IRON PIPE SET
- P.K. NAIL SET
- NO POINT SET
- EXISTING IRON PIPE
- EXISTING IRON BAR
- CONCRETE MONUMENT
- SIGN
- WATER METER
- WATER VALVE
- GAS METER
- GAS VALVE
- EXISTING TREE
- MANHOLE
- 48.37 EXISTING SPOT ELEVATION
- 48 EXISTING CONTOURS
- PP POWER POLE
- PP/LP POWER POLE WITH LIGHT
- FH FIRE HYDRANT
- PROPERTY LINE
- STORM DRAIN
- FENCE LINE
- WATER LINE
- SANITARY SEWER LINE
- GAS LINE
- OVERHEAD UTILITY LINE
- ROOF DRAIN
- UNDERGROUND ELECTRIC
- FIRE MAIN
- CONDUIT
- DEMO / TO BE REMOVED
- TREE LINE / VEGETATION
- LIMITS OF DISTURBANCE
- TEMPORARY DIVERSION DITCH
- BACK OF CURB — BC ??.??
- TOP OF CONCRETE — TC ??.??
- TOP OF ISLAND — TI ??.??
- TOP OF PAVEMENT — TP ??.??
- SPILL GUTTER
- TRUNCATED DOMES
- CATCH BASIN
- DEMO / TO BE REMOVED
- ROCK INLET SEDIMENT TRAP
- TREE/SHRUB DEMO/REMOVAL
- CONCRETE
- BACTERIOLOGICAL SAMPLE POINT — BSP

Erosion Control Provisions

1. OBTAIN AND POST A COPY OF THE CERTIFICATE OF EROSION CONTROL PLAN APPROVAL AT THE PRIMARY ENTRANCE TO EACH PROJECT AREA. CERTIFICATE SHALL REMAIN UNTIL THE SITE IS PERMANENTLY STABILIZED.
2. NOTIFY ENGINEER AT (252) 558-0888 AND NCDEQ - DIVISION OF ENERGY, MINERAL AND LAND RESOURCES AT (252) 946-6481 PRIOR TO COMMENCING CONSTRUCTION OPERATIONS.
3. SCHEDULING OF A PRE-CONSTRUCTION CONFERENCE WITH THE ENGINEER IS REQUIRED PRIOR TO INITIATING LAND DISTURBING ACTIVITIES. FOR INSPECTION CALL (252) 558-0888. 48 HOUR NOTICE IS REQUIRED.
4. CLEAR SITE ONLY AS NECESSARY TO INSTALL EROSION CONTROL DEVICES AS INDICATED ON THE DRAWINGS OR SPECIFIED IN THE SPECIFICATIONS.
5. NO LAND DISTURBING ACTIVITY BEYOND THAT REQUIRED TO INSTALL APPROPRIATE EROSION CONTROL MEASURES MAY PROCEED UNTIL EROSION CONTROL MEASURES ARE INSPECTED AND APPROVED BY THE ENGINEER.
6. INSTALL ROCK INLET SEDIMENT TRAPS AROUND ALL CATCH BASINS, DROP INLETS, AND YARD INLETS.
7. PROVIDE 20' X 50' X 6" STONE CONSTRUCTION ENTRANCES AS SHOWN ON PLAN.
8. MAINTAIN EROSION CONTROL DEVICES AS NECESSARY DURING CONSTRUCTION. INSPECT DEVICES AND DOCUMENT INSPECTIONS AFTER EVERY RAINFALL EVENT.
9. CLEAN OUT TRAPS, WADDLES AND/OR CHECK DAMS WHEN HALF FULL.
10. DURING CONSTRUCTION, INSTALL ADDITIONAL EROSION CONTROL DEVICES AS INDICATED ON THE DRAWINGS, CALLED FOR IN THE SPECIFICATIONS, OR AS NEEDED OR DIRECTED BY THE ENGINEER.
11. SEED OR OTHERWISE PROVIDE GROUND COVER DEVICES OR STRUCTURES SUFFICIENT TO RESTRAIN EROSION FOR ALL EXPOSED SLOPES WITHIN 7 DAYS OF COMPLETION OF ANY PHASE OF GRADING ON PERIMETER AREAS AND SLOPES STEEPER THAN 3:1. ALL OTHER AREAS SHALL BE STABILIZED WITHIN 14 DAYS.
12. CONTRACTOR SHALL INSPECT AND MAINTAIN AS NEEDED ALL EROSION CONTROL DEVICES ON A WEEKLY BASIS AND AFTER EACH MAJOR STORM EVENT. FAILURE TO KEEP ALL EROSION CONTROL DEVICES IN PROPER WORKING ORDER MAY RESULT IN A STOP WORK ORDER OR CIVIL PENALTIES UP TO $5000.00 PER DAY OF VIOLATION.
13. AFTER SITE IS STABILIZED, REQUEST AN INSPECTION BY THE ENGINEER. UPON APPROVAL OF SITE STABILIZATION, REMOVE TEMPORARY EROSION CONTROL DEVICES, FINE GRADE AREA, AND SEED AND MULCH. PERMANENT EROSION CONTROL DEVICES SHALL BE INSTALLED BY CONTRACTOR AND APPROVED BY ENGINEER
14. THE ENGINEER RESERVES THE RIGHT TO REQUIRE ADDITIONAL EROSION CONTROL MEASURES SHOULD THE PLAN OR ITS IMPLEMENTATION PROVE TO BE INADEQUATE.
15. ACCEPTANCE AND APPROVAL OF THIS PLAN IS CONDITIONED UPON THE CONTRACTORS COMPLIANCE WITH FEDERAL AND STATE WATER QUALITY LAWS, REGULATION AND RULES. IN ADDITION LOCAL CITY AND COUNTY ORDINANCES OR RULES MAY ALSO APPLY TO THIS LAND DISTURBING ACTIVITY. APPROVAL OF THE EROSION CONTROL PLAN DOES NOT SUPERSEDE ANY OTHER PERMIT OR APPROVAL.
16. BE ADVISED OF THE RULES TO PROTECT AND MAINTAIN EXISTING BUFFERS ALONG WATERCOURSES IN THE NEUSE AND TAR / PAMLICO RIVER BASINS. THESE RULES ARE ENFORCED BY THE DIVISION OF WATER RESOURCES (DWR). DIRECT ANY QUESTIONS ABOUT THE APPLICABILITY OF THESE RULES TO THE PROJECT TO THE REGIONAL WATER QUALITY SUPERVISOR, WASHINGTON REGIONAL OFFICE AT (252) 946-6481.

EROSION CONTROL GENERAL NOTES

1. IN THE EVENT OF A CONFLICT BETWEEN THE REQUIREMENTS OF THE SEDIMENTATION POLLUTION CONTROL ACT, THE SUBMITTED PLAN AND/OR THE CONTRACT SPECIFICATIONS, THE MORE RESTRICTIVE REQUIREMENT SHALL PREVAIL.
2. THE LAND-DISTURBING ACTIVITY SHALL BE CONDUCTED IN ACCORDANCE WITH THE APPROVED EROSION AND SEDIMENTATION CONTROL PLAN.
3. THE LATEST APPROVED EROSION AND SEDIMENTATION CONTROL PLAN WILL BE USED DURING PERIODIC UNANNOUNCED INSPECTIONS TO DETERMINE COMPLIANCE AND A COPY OF THE PLAN MUST BE ON FILE AT THE JOB SITE. IF IT IS DETERMINED THAT THE IMPLEMENTED PLAN IS INADEQUATE, THE ENGINEER MAY REQUIRE THE INSTALLATION OF ADDITIONAL MEASURES AND/OR THAT THE PLAN BE REVISED TO COMPLY WITH STATE LAW.
4. IN ORDER TO COMPLY WITH THE INTENT OF THE ACT, THE SCHEDULING OF THE LAND-DISTURBING ACTIVITIES IS TO BE SUCH THAT BOTH THE AREA OF EXPOSURE AND THE TIME BETWEEN THE LAND DISTURBANCE AND THE PROVIDING OF A GROUND COVER IS MINIMIZED.
5. UNLESS A TEMPORARY, MANUFACTURED, LINING MATERIAL HAS BEEN SPECIFIED, A CLEAN STRAW MULCH MUST BE APPLIED, AT A MINIMUM RATE OF 2 TONS/ACRE, TO ALL SEEDED AREAS. THE MULCH MUST COVER AT LEAST 75% OF THE SEEDED AREA AFTER IT IS EITHER TACKED, WITH AN ACCEPTABLE TACKING MATERIAL, OR CRIMPED IN PLACE.
6. NEW OR AFFECTED CUT OR FILLED SLOPES MUST BE AT AN ANGLE THAT CAN BE RETAINED BY VEGETATIVE COVER, AND MUST BE PROVIDED WITH A GROUND COVER SUFFICIENT TO RESTRAIN EROSION WITHIN A MAXIMUM OF 7 CALENDAR DAYS OF COMPLETION OF ANY PHASE (ROUGH OR FINAL) OF GRADING (ANNUAL RYE GRASS IS NOT IN THE APPROVED SEEDING SPECIFICATIONS NOR IS IT AN ACCEPTABLE SUBSTITUTE FOR THE PROVIDING OF A TEMPORARY GROUND COVER).
7. INSTALL SILT FENCE AROUND SPOIL PILES AND ALONG TRENCHES TO MINIMIZE SEDIMENT FROM ENTERING DRAINAGE WAYS.
8. PROVIDE EROSION CONTROL MEASURES AROUND STOCK/WASTE PILES AND STAGING AREAS AS NEEDED OR AS DIRECTED BY ENGINEER.
9. PROTECT STORM PIPE INLETS FROM SEDIMENT RUNOFF FROM LAND DISTURBING ACTIVITIES WITH SILT FENCE, STONE CHECK DAM, OR ABC FILTER AS APPROPRIATE FOR SITE CONDITIONS.
10. EROSION CONTROL MEASURES SHALL NOT BE PLACED IN OR BELOW THE NORMAL WATER SURFACE OF A STREAM UNLESS SPECIFICALLY INDICATED ON THE APPROVED PLAN OR AS DIRECTED BY THE ENGINEER OR NCDEQ.
11. REPLACE DISTURBED STORM PIPE OUTLET PROTECTION WITH EQUAL OR GREATER AMOUNT OF RIP-RAP WITHIN 7 DAYS OF DISTURBANCE OR AS REQUIRED BY THE ENGINEER OR NCDEQ.
12. WHERE THE AREA AROUND AN OUTLET IS DISTURBED AND NO OUTLET PROTECTION EXISTS, CLASS "I" RIP-RAP SHALL BE PLACED AROUND PIPE OUTLET AS NEEDED OR AS DIRECTED BY THE ENGINEER.
13. PROVIDE EROSION CONTROL MATTING WHERE INDICATED UNLESS DIRECTED OTHERWISE BY THE ENGINEER.
14. PROVIDE PERMANENT SEEDING IN ACCORDANCE WITH THE SEEDING SCHEDULE.
15. ALL EXCESS AND/OR UNSUITABLE EXCAVATED MATERIAL SHALL BE DISPOSED OF AT CITY OF WASHINGTON'S CONSTRUCTION & DEMOLITION DEBRIS LANDFILL ON SPRING ROAD

20' 0 10' 20'
SCALE 1 inch = 20 ft

Greenville NORTH CAROLINA

JACOBS
333 Fayetteville Street
Suite 1100
Raleigh, NC 27601
www.jacobs.com

AYERS SAINT GROSS

Consultants:
Coaly Design
Landscape Architecture + Land Planning

ARK Consulting Group, PLLC
Engineers & Planners
3280 Charles Blvd. | Suite B
Greenville, NC 27858
(252) 558-0888
NC License: P-1199

Seals:
NORTH CAROLINA PROFESSIONAL SEAL 28425 ENGINEER SCOTT T. ANDERSON
9/10/2016

SCOTT T. ANDERSON, P.E., LICENSE NO. 28425

General Notes:

Project Client:
CITY OF GREENVILLE

GREENVILLE TRANSPORTATION ACTIVITY CENTER
600 S. Pitt Street, Greenville, NC

Number	Description	Date
0	IFC	05-10-2016

Key Plan:

Project North

CAD File:
Project No.: L3005900

Copyright: 2015 Jacobs Engineering Group

Drawing Sheet Title:
EROSION CONTROL PLAN

Drawing Sheet Number:
C-3

Owner's Drawing Sheet No.:
Ark Drawing No. E-1004

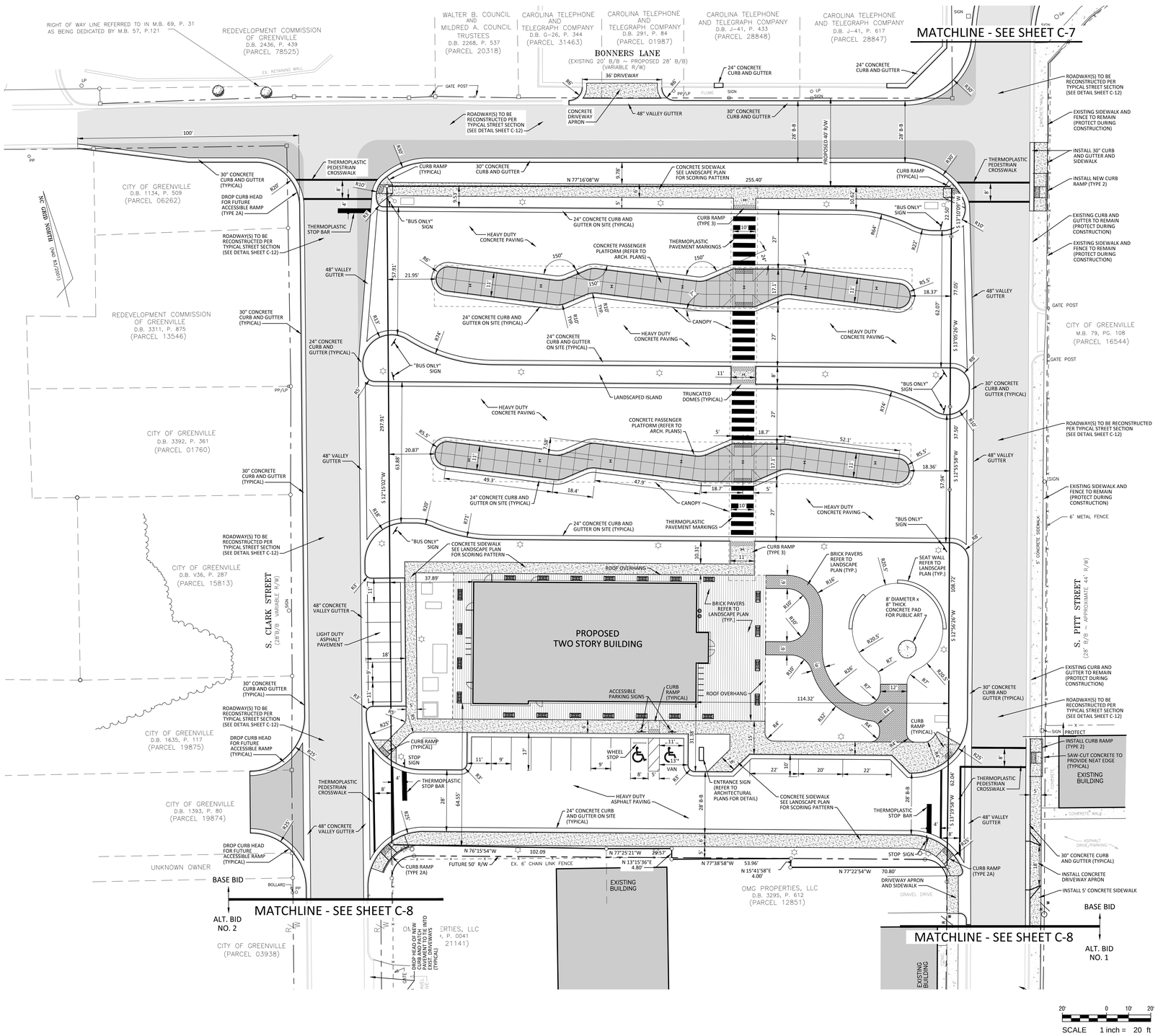

Legend

- "X" IN CONCRETE
- CORNER AT INTERSECTION
- IRON PIPE SET
- P.K. NAIL SET
- NO POINT SET
- EXISTING IRON PIPE
- EXISTING IRON BAR
- CONCRETE MONUMENT
- SIGN
- WATER METER
- WATER VALVE
- GAS METER
- GAS VALVE
- EXISTING TREE
- MANHOLE
- 48.37 EXISTING SPOT ELEVATION
- EXISTING CONTOURS
- POWER POLE
- POWER POLE WITH LIGHT
- FIRE HYDRANT
- PROPERTY LINE
- STORM DRAIN
- FENCE LINE
- WATER LINE
- SANITARY SEWER LINE
- GAS LINE
- OVERHEAD UTILITY LINE
- ROOF DRAIN
- UNDERGROUND ELECTRIC
- FIRE MAIN
- CONDUIT
- DEMO / TO BE REMOVED
- TREE LINE / VEGETATION
- LIMITS OF DISTURBANCE
- TEMPORARY DIVERSION DITCH
- BACK OF CURB
- TOP OF CONCRETE
- TOP OF ISLAND
- TOP OF PAVEMENT
- SPILL GUTTER
- TRUNCATED DOMES
- CATCH BASIN
- DEMO / TO BE REMOVED
- ROCK INLET SEDIMENT TRAP
- TREE/SHRUB DEMO/REMOVAL
- CONCRETE
- BACTERIOLOGICAL SAMPLE POINT

General Notes:

1. PAVEMENT SECTIONS ARE AS INDICATED ON SHEET C-12.
2. PROVIDE ALL NECESSARY SIGNAGE FOR HANDICAP PARKING.
3. PARKING LOT SHALL BE STRIPED IN ACCORDANCE WITH PLAN.
4. REFER TO ARCHITECTURAL PLANS FOR BUILDING DIMENSIONS.
5. ALL DIMENSIONS ARE TO BACK OF CURB UNLESS OTHERWISE NOTED.
6. SITE SHALL MEET ALL RELATED ACCESSIBILITY CODE REQUIREMENTS.
7. ALL PAVEMENT MARKING WITHIN PUBLIC RIGHT OF WAY SHALL BE THERMOPLASTIC.

Bufferyard Notes:

SITE DATA: LAND AREA FOR VEGETATION REQUIREMENTS: N/A (CD ZONING)

A. REQUIRED VEGETATION FOR LOT:
   LARGE TREES: 0
   SMALL TREES: 0
   SHRUBS: 0

B. REQUIRED STREET VEGETATION:
   LARGE TREES: 0

C. REQUIRED SCREENING VEGETATION: NONE

D. REQUIRED VEGETATION LOCATED IN EASEMENTS: NONE

2.

A. MINIMUM PLANT SIZES SHALL BE IN ACCORDANCE WITH THE ZONING REGULATIONS AS FOLLOWS:

PLANTING MATERIAL TYPE	MINIMUM PLANTING SIZE
1. LARGE TREE - SINGLE STEM	10' (HEIGHT) AND 2" CALIPER
MULTI-STEM	10' (HEIGHT)
2. SMALL TREE	8' (HEIGHT) AND 1.5" CALIPER
3. SHRUB	18" (HEIGHT), EXCEPT AS PROVIDED UNDER SECTION 9-4-267(a)

B. NO PORTION OF ANY PARKING AREA, INCLUDING ANY DRIVEWAY, PARKING SPACE, DRIVE AISLE OR TURNING AREA, SHALL BE LOCATED MORE THAN THIRTY (30) FEET FROM AN ON-SITE SMALL TREE OR MORE THAN SEVENTY-FIVE (75) FEET FROM AN ON-SITE LARGE TREE. FOR PURPOSES OF THIS SECTION, THE MEASUREMENT SHALL BE FROM THE FARTHEST EDGE OF THE SUBJECT AREA TO THE CENTER OF THE BASE OF THE CLOSEST QUALIFYING TREE.

C. SITE PLAN APPROVAL FROM THE RESPECTIVE EASEMENT HOLDER SHALL BE CONSTRUED AS APPROVAL OF ALL ENCROACHMENTS, AS SHOWN. ON THIS PLAN. (SEE NOTE ON ITEM 1.D.)

D. THE FOLLOWING VEGETATION MATERIALS, AS LISTED BY COMMON NAME, SHALL CONSTITUTE NOT MORE THAN TWENTY-FIVE (25) PERCENT OF THE TOTAL REQUIREMENT FOR THE SPECIFIC CATEGORY:

   A. LARGE TREE CATEGORY: RIVER BIRCH

   B. SMALL TREE CATEGORY: ARISTOCRAT PEAR, BRADFORD PEAR, CAPITOL PEAR, CLEVELAND SELECT PEAR

   C. EVERGREEN SHRUB CATEGORY: RED TIP PHOTINIA

E. DUMPSTER/COMPACTOR SHALL BE SCREENED ON 3 SIDES IN ACCORDANCE WITH SECTION 9-4-268 (h) OF THE CITY CODE.

F. EXISTING SUBSTITUTE VEGETATION MATERIALS HAVE BEEN NOTED INCLUDING THEIR SPECIFIC LOCATION(S), TYPE(S), AND SIZE(S).

G. EXISTING SUBSTITUTE VEGETATION MATERIAL SHALL BE PROTECTED FROM SITE DEVELOPMENT ACTIVITIES IN ACCORDANCE WITH SECTION 9-4-265 (F) OF THE CITY CODE.

H. NO LARGE TREES TO BE PLANTED WITHIN SANITARY SEWER, WATERLINE OR ELECTRIC EASEMENTS.

I. PARKING LOT AREA TO BE SCREENED IN ACCORDANCE WITH SECTION 9-4-268(L)9 OF THE CITY CODE. PARKING AREA SCREENING SHALL BE INSTALLED WITHIN A 10 FOOT AREA ADJACENT TO AND EXTENDING THE FULL STREET SIDE WIDTH OF ALL PARKING AREAS WHICH FRONT A PUBLIC OR PRIVATE STREET.

J. MINIMUM OF 3 FEET CLEARANCE MUST BE MAINTAINED AROUND ALL FIRE HYDRANTS IN ACCORDANCE WITH STATE BUILDING CODE.

K. ALL REQUIRED PLANT MATERIAL (LARGE AND SMALL TREES, SHRUBS) LOCATED IN A SCREENING BUFFERYARD (C, D, E & F) SHALL BE EVERGREEN.

Greenville NORTH CAROLINA

JACOBS
333 Fayetteville Street
Suite 1100
Raleigh, NC 27601
www.jacobs.com

AYERS SAINT GROSS

Consultants:
Coaly Design
Landscape Architecture + Land Planning

ARK Consulting Group, PLLC
Engineers & Planners
3280 Charles Blvd. | Suite B
Greenville, NC 27858
(252) 558-0888
NC License: P-1199

Seals:
NORTH CAROLINA PROFESSIONAL SEAL 28425 ENGINEER SCOTT T. ANDERSON
9/10/2016

SCOTT T. ANDERSON, P.E., LICENSE NO. 28425

General Notes:

Project Client:
CITY OF GREENVILLE

GREENVILLE TRANSPORTATION ACTIVITY CENTER

600 S. Pitt Street, Greenville, NC

Number	Description	Date
0	IFC	05-10-2016

Key Plan:

Project North

CAD File:
Project No.: L3005900

Copyright: 2015 Jacobs Engineering Group

Drawing Sheet Title:
SITE LAYOUT PLAN

Drawing Sheet Number:
C-4

Owner's Drawing Sheet No.:
Ark Drawing No. E-1004

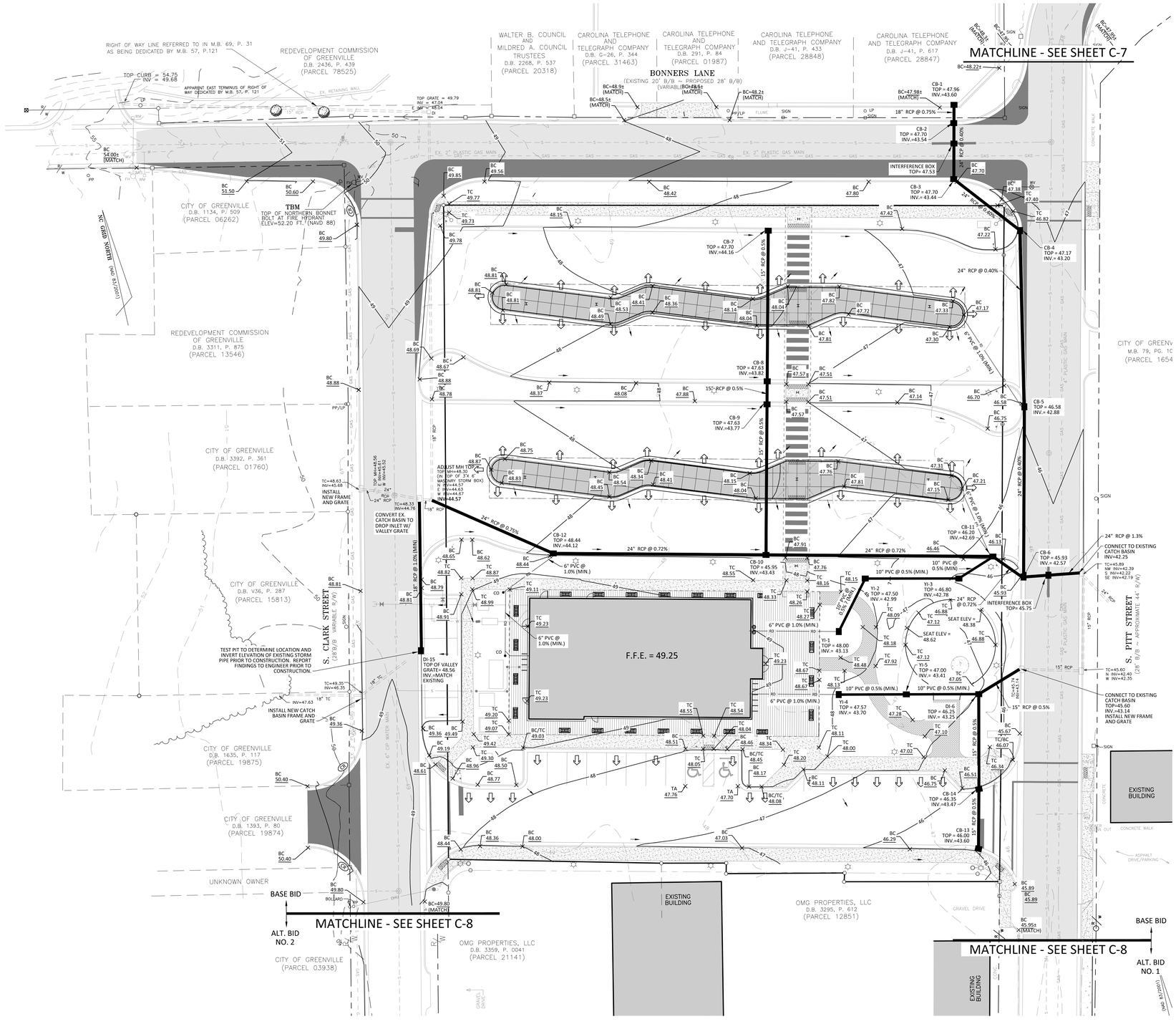

Legend

- "X" IN CONCRETE
- CORNER AT INTERSECTION
- IRON PIPE SET
- P.K. NAIL SET
- NO POINT SET
- EXISTING IRON PIPE
- EXISTING IRON BAR
- CONCRETE MONUMENT
- SIGN
- WATER METER
- WATER VALVE
- GAS METER
- GAS VALVE
- EXISTING TREE
- MANHOLE
- EXISTING SPOT ELEVATION
- EXISTING CONTOURS
- POWER POLE
- POWER POLE WITH LIGHT
- FIRE HYDRANT
- PROPERTY LINE
- STORM DRAIN
- FENCE LINE
- WATER LINE
- SANITARY SEWER LINE
- GAS LINE
- OVERHEAD UTILITY LINE
- ROOF DRAIN
- UNDERGROUND ELECTRIC
- FIRE MAIN
- CONDUIT
- DEMO / TO BE REMOVED
- TREE LINE / VEGETATION
- LIMITS OF DISTURBANCE
- TEMPORARY DIVERSION DITCH
- BACK OF CURB
- TOP OF CONCRETE
- TOP OF ISLAND
- TOP OF PAVEMENT
- SPILL GUTTER
- TRUNCATED DOMES
- CATCH BASIN
- DEMO / TO BE REMOVED
- ROCK INLET SEDIMENT TRAP
- TREE/SHRUB DEMO/REMOVAL
- CONCRETE
- BACTERIOLOGICAL SAMPLE POINT

Permanent Seeding Schedule:

SEED BED PREPARATION
LIME - 2 TONS PER ACRE
FERTILIZER (10-20-20) - 500 POUNDS PER ACRE

SEEDING MIXTURE:
(JANUARY 1 - MARCH 31)
COMMON BERMUDA GRASS (UNHULLED) - 20 POUNDS PER ACRE
RYE (GRAIN) - 25 POUNDS PER ACRE

(APRIL 1 - JULY 31)
COMMON BERMUDAGRASS (HULLED) - 15 POUNDS PER ACRE
WEEPING LOVEGRASS - 5 POUNDS PER ACRE
CENTIPEDE - 8 POUNDS PER ACRE

(AUGUST 1 - DECEMBER 31)
COMMON BERMUDA GRASS (UNHULLED) - 20 POUNDS PER CARE
TALL FESCUE - 60 POUNDS PER ACRE
RYE (GRAIN) - 25 POUNDS PER ACRE

SEED BED PROTECTION:
STRAW MULCH - 2 TONS PER ACRE (VISUAL)
ASPHALT TACK - 0.03 GALLONS PER SQUARE YARD

Grading Notes:

1. ALL AREAS WITHIN LIMITS OF DISTURBANCE SHALL BE CLEARED AND GRUBBED.
2. CONTRACTOR SHALL REMOVE EXISTING VEGETATION AND IMPROVEMENTS WITHIN LIMITS OF DISTURBANCE UNLESS NOTED OTHERWISE.
3. TREES OUTSIDE OF CONSTRUCTION LIMITS OR TREES NOT INDICATED TO BE REMOVED SHALL BE PROTECTED.
4. THE BURNING OF CLEARED MATERIAL AND DEBRIS SHALL NOT BE ALLOWED UNLESS CONTRACTOR GETS WRITTEN AUTHORIZATION FROM THE LOCAL AUTHORITIES.
5. ALL DEMOLITION WASTE AND DEBRIS SHALL BE REMOVED BY THE CONTRACTOR AND DISPOSED OF IN A STATE APPROVED WASTE SITE AND IN ACCORDANCE WITH ALL LOCAL AND STATE CODES AND PERMIT REQUIREMENTS.
6. CONTRACTOR TO GRADE ALL AREAS WITHIN THE LIMITS OF DISTURBANCE FROM BUILDING TO PROPERTY LINES AND TO EDGE OF PAVEMENT ON STREET SIDES, INCLUDING ROW.
7. TOP SOIL SHALL BE STRIPPED FROM ALL CUT AND FILL AREAS, STOCKPILED AND REDISTRIBUTED OVER GRADED AREAS. PROVIDE EROSION AND SEDIMENTATION CONTROLS AROUND STOCKPILES DURING CONSTRUCTION.
8. TILL SOIL TO A DEPTH OF 4" MINIMUM.
9. REMOVE ALL ROCKS LARGER THAN 1" MEASURED IN LARGEST DIRECTION.
10. GRADE ALL AREAS TO MAINTAIN POSITIVE SLOPE AWAY FROM BUILDING.
11. ALL GRADED AREAS TO RECEIVE SEED OR SOD, TOP SOIL, STRAW AND WATER UNTIL A HEALTHY STAND OF GRASS IS OBTAINED.
12. INSTALL TEMPORARY TURF REINFORCEMENT MATTING ON ALL SLOPES STEEPER THAN 3:1. MATTING SHALL BE CONTECH LANDLOK C2 OR EQUAL.
13. REFER TO SHEET C-12 FOR DETAILS OF PAVEMENT IN PARKING AND DRIVE AREAS.
14. ALL BUILDING, SIDEWALK, AND PAVEMENT SUB-GRADES SHALL BE COMPACTED TO 100% OF ASTM D698 TO A DEPTH OF 24" AND TO 95% OF ASTM D698 BELOW 24" DEPTHS. ALL OTHER NON-STRUCTURAL AREAS SHALL BE COMPACTED TO 90% OF ASTM D698.
15. ALL BUILDING, SIDEWALK, AND PAVEMENT SUB-GRADE COMPACTIONS SHALL BE INTERMEDIATELY TESTED AND APPROVED BY THE GEOTECHNICAL ENGINEER. ALL SUB-GRADES SHALL BE THOROUGHLY PROOF-ROLLED TO IDENTIFY SMALL LOCALIZED AREAS OF UNSUITABLE SOILS. ALL UNSUITABLE SOILS SHALL BE UNDERCUT, REPLACED WITH STRUCTURAL FILL, AND COMPACTED AS DESCRIBED ABOVE.
16. ROADWAY(S) TO BE RECONSTRUCTED PER TYPICAL STREET SECTION (SEE DETAIL SHEET C-12)

SCALE 1 inch = 20 ft

Greenville NORTH CAROLINA

JACOBS
333 Fayetteville Street
Suite 1100
Raleigh, NC 27601
www.jacobs.com

AYERS SAINT GROSS

Consultants:
Coaly Design
Landscape Architecture + Land Planning

ARK Consulting Group, PLLC
Engineers & Planners
3280 Charles Blvd. | Suite B
Greenville, NC 27858
(252) 558-0888
NC License: P-1199

Seals:
NORTH CAROLINA PROFESSIONAL SEAL 28425 ENGINEER SCOTT T. ANDERSON
9/10/2016

SCOTT T. ANDERSON, P.E., LICENSE NO. 28425

General Notes:

Project Client:
CITY OF GREENVILLE

GREENVILLE TRANSPORTATION ACTIVITY CENTER
600 S. Pitt Street, Greenville, NC

Number	Description	Date
0	IFC	05-10-2016

Key Plan:

Project North

CAD File:
Project No.: L3005900
Copyright: 2015 Jacobs Engineering Group

Drawing Sheet Title:
GRADING AND DRAINAGE PLAN

Drawing Sheet Number:
C-6

Owner's Drawing Sheet No.:
Ark Drawing No. E-1004

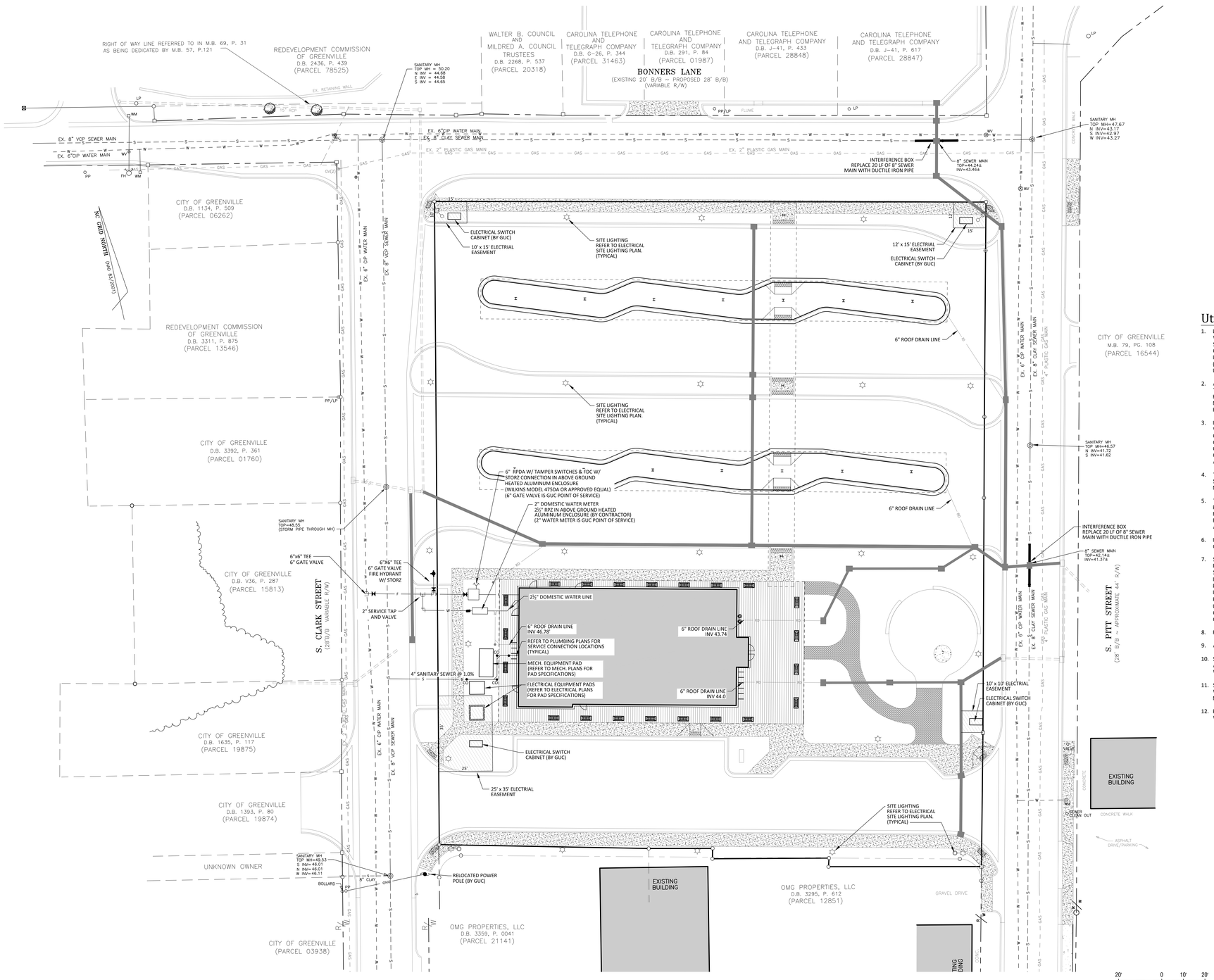

Legend

- "X" IN CONCRETE
- CORNER AT INTERSECTION
- IRON PIPE SET
- P.K. NAIL SET
- NO POINT SET
- EXISTING IRON PIPE
- EXISTING IRON BAR
- CONCRETE MONUMENT
- SIGN
- WATER METER
- WATER VALVE
- GAS METER
- GAS VALVE
- EXISTING TREE
- MANHOLE
- EXISTING SPOT ELEVATION
- EXISTING CONTOURS
- POWER POLE
- POWER POLE WITH LIGHT
- FIRE HYDRANT
- PROPERTY LINE
- STORM DRAIN
- FENCE LINE
- WATER LINE
- SANITARY SEWER LINE
- GAS LINE
- OVERHEAD UTILITY LINE
- ROOF DRAIN
- UNDERGROUND ELECTRIC
- FIRE MAIN
- CONDUIT
- DEMO / TO BE REMOVED
- TREE LINE / VEGETATION
- LIMITS OF DISTURBANCE
- TEMPORARY DIVERSION DITCH
- BACK OF CURB
- TOP OF CONCRETE
- TOP OF ISLAND
- TOP OF PAVEMENT
- SPILL GUTTER
- TRUNCATED DOMES
- CATCH BASIN
- DEMO / TO BE REMOVED
- ROCK INLET SEDIMENT TRAP
- TREE/SHRUB DEMO/REMOVAL
- CONCRETE
- BACTERIOLOGICAL SAMPLE POINT

Utility Notes:

1. LOCATION OF ALL EXISTING AND PROPOSED SERVICES ARE APPROXIMATE AND MUST BE CONFIRMED INDEPENDENTLY WITH LOCAL UTILITY COMPANIES PRIOR TO COMMENCEMENT OF ANY CONSTRUCTION OR EXCAVATION. SANITARY SEWER AND ALL OTHER UTILITY SERVICE CONNECTION POINTS SHALL BE CONFIRMED INDEPENDENTLY BY THE CONTRACTOR IN THE FIELD PRIOR TO THE COMMENCEMENT OF CONSTRUCTION. DISCREPANCIES SHALL BE REPORTED IMMEDIATELY IN WRITING TO ENGINEER. CONSTRUCTION SHALL COMMENCE BEGINNING AT THE LOWEST INVERT (POINT OF CONNECTION) AND PROGRESS UPSTREAM. PROPOSED INTERFACE POINTS (CROSSINGS) WITH EXISTING UNDERGROUND UTILITIES SHALL BE FIELD VERIFIED BY TEST PIT PRIOR TO COMMENCEMENT OF CONSTRUCTION.
2. ALL UTILITIES AND SERVICES INCLUDING BUT NOT LIMITED TO GAS, WATER, ELECTRIC, SANITARY AND STORM SEWER, TELEPHONE, CABLE, FIBER OPTIC CABLE WITHIN THE LIMITS OF DISTURBANCE SHALL BE VERTICALLY AND HORIZONTALLY LOCATED. THE CONTRACTOR SHALL COMPLY WITH THE REQUIREMENTS OF THE APPLICABLE UTILITY NOTIFICATION SYSTEM TO LOCATE ALL THE UNDERGROUND UTILITIES. THE CONTRACTOR IS RESPONSIBLE FOR REPAIRS OF DAMAGE TO ANY EXISTING UTILITIES DURING CONSTRUCTION AT NO COST TO THE OWNER.
3. IT IS THE RESPONSIBILITY OF THE CONTRACTOR TO REVIEW ALL OF THE DRAWINGS AND SPECIFICATIONS ASSOCIATED WITH THE PROJECT WORK SCOPE PRIOR TO THE INITIATION OF CONSTRUCTION. SHOULD THE CONTRACTOR FIND A CONFLICT WITH THE DOCUMENTS RELATIVE TO THE SPECIFICATIONS OR THE RELATIVE CODES, IT IS THE CONTRACTOR'S RESPONSIBILITY TO NOTIFY THE PROJECT ENGINEER OF RECORD IN WRITING PRIOR TO COMMENCING CONSTRUCTION. FAILURE BY THE CONTRACTOR TO NOTIFY THE PROJECT ENGINEER SHALL CONSTITUTE ACCEPTANCE OF FULL RESPONSIBILITY BY THE CONTRACTOR TO COMPLETE THE SCOPE OF WORK AS DEFINED BY THE DRAWINGS AND IN FULL COMPLIANCE WITH LOCAL AND STATE REGULATIONS AND CODES.
4. THE SITE UTILITY CONTRACTOR SHALL DEFINE AND LOCATE VERTICALLY AND HORIZONTALLY ALL ACTIVE UTILITY SERVICE SYSTEMS THAT ARE TO BE REMOVED. THE SITE UTILITY CONTRACTOR IS RESPONSIBLE TO PROTECT AND MAINTAIN ALL ACTIVE SYSTEMS THAT ARE NOT BEING REMOVED OR RELOCATED DURING SITE ACTIVITIES.
5. THE SITE UTILITY CONTRACTOR SHALL FAMILIARIZE THEMSELVES WITH THE APPLICABLE UTILITY SERVICE PROVIDER REQUIREMENTS AND IS RESPONSIBLE FOR ALL COORDINATION REGARDING UTILITY DEMOLITION AS IDENTIFIED OR REQUIRED FOR THE PROJECT. THE CONTRACTOR SHALL PROVIDE THE OWNER WRITTEN NOTIFICATION THAT THE EXISTING UTILITIES AND SERVICES HAVE BEEN TERMINATED AND ABANDONED IN ACCORDANCE WITH JURISDICTION AND UTILITY COMPANY REQUIREMENTS.
6. INSTALL ALL STORM AND SANITARY SEWER COMPONENTS WHICH FUNCTION BY GRAVITY PRIOR TO THE INSTALLATION OF ALL OTHER UTILITIES.
7. SITE UTILITY CONTRACTOR IS RESPONSIBLE FOR COORDINATION OF SITE PLAN DOCUMENTS AND ARCHITECTURAL PLANS FOR EXACT BUILDING UTILITY CONNECTION LOCATIONS, DOOR ACCESS AND EXTERIOR GRADING. THE UTILITY SERVICE SIZES ARE TO BE DETERMINED BY THE ARCHITECT. THE SITE UTILITY CONTRACTOR SHALL COORDINATE INSTALLATION OF UTILITIES / SERVICES WITH THE INDIVIDUAL COMPANIES, TO AVOID CONFLICTS, AND TO ENSURE PROPER DEPTHS ARE ACHIEVED. THE SITE UTILITY CONTRACTOR SHALL BE RESPONSIBLE FOR ENSURING THAT INSTALLATION OF ALL IMPROVEMENTS COMPLIES WITH UTILITY REQUIREMENTS HAVING JURISDICTION, AND SHALL BE RESPONSIBLE FOR COORDINATING THE UTILITY TIE-INS / CONNECTIONS PRIOR TO CONNECTING TO THE EXISTING UTILITY / SERVICE. WHERE CONFLICTS EXIST WITH THESE PLANS, OR WHERE ARCHITECTURAL PLAN UTILITY CONNECTION POINTS DIFFER, THE CONTRACTOR SHALL IMMEDIATELY NOTIFY THE ENGINEER PRIOR TO CONSTRUCTION COMMENCEMENT TO RESOLVE.
8. REFER TO M.E.P. PLANS FOR COORDINATION OF BUILDING UTILITY SERVICES.
9. ALL NEW UTILITIES, INCLUDING ELECTRIC, TELEPHONE, CABLE TV SHALL BE INSTALLED UNDERGROUND.
10. SITE UTILITY CONTRACTOR IS RESPONSIBLE FOR COORDINATING WITH UTILITY PROVIDERS FOR THE RELOCATION / ABANDONMENT OF EXISTING UTILITIES AND INSTALLATION OF NEW UTILITY SERVICES AS WELL AS FEES ASSOCIATED WITH SUCH WORK.
11. SITE UTILITY CONTRACTOR SHALL NOTIFY GREENVILLE UTILITIES COMMISSION AT (252) 551-1586 PRIOR TO BEGINNING WORK ON ANY GUC OWNED FACILITIES OR ON ANY FACILITIES TO BE ACCEPTED FOR PERMANENT OPERATION AND MAINTENANCE BY GUC.
12. EXISTING UNUSED SEWER SERVICES TO BE ABANDONED AT THE BACK OF CURB. CONTRACTOR SHALL COORDINATE WITH GUC FOR INSPECTION OF ABANDONMENT.

Utility Providers:

STORM DRAINAGE:
City of Greenville
Contact: Scott Godefroy, PE
Phone: (252) 329-4525

WATER & SANITARY SEWER:
Greenville Utilities Commission
Contact: Cliff Cahoon, PE
Phone: (252) 551-3386

GAS:
Greenville Utilities Commission
Contact: Cheryl Barrett
Phone: (252) 551-1596

PUBLIC STREETS:
City of Greenville
Contact: Scott Godefroy, PE
Phone: (252) 329-4525

ELECTRIC UTILITIES:
Greenville Utilities Commission
Contact: Chris Corey
Phone: (252) 551-1586

TELEPHONE:
CenturyLink
Contact: Pam Isles
Phone: (252) 355-4544

CABLE TV:
SuddenLink
Contact: Nathan Barnhill
Phone: (252) 792-9182

Greenville NORTH CAROLINA

JACOBS
333 Fayetteville Street
Suite 1100
Raleigh, NC 27601
www.jacobs.com

AYERS SAINT GROSS

Consultants:
Coaly Design
Landscape Architecture + Land Planning

ARK Consulting Group, PLLC
Engineers & Planners
3280 Charles Blvd. | Suite B
Greenville, NC 27858
(252) 558-0888
NC License: P-1199

Seals:

NORTH CAROLINA PROFESSIONAL SEAL 28425 ENGINEER SCOTT T. ANDERSON

5/10/2016

SCOTT T. ANDERSON, P.E., LICENSE NO. 28425

General Notes:

Project Client:
CITY OF GREENVILLE

GREENVILLE TRANSPORTATION ACTIVITY CENTER

600 S. Pitt Street, Greenville, NC

Number	Description	Date
0	IFC	05-10-2016

Key Plan:

Project North

CAD File:

Project No.: L3005900

Copyright: 2015 Jacobs Engineering Group

Drawing Sheet Title:

SITE UTILITY PLAN

Drawing Sheet Number:

C-5

Owner's Drawing Sheet No.:

Ark Drawing No. E-1004

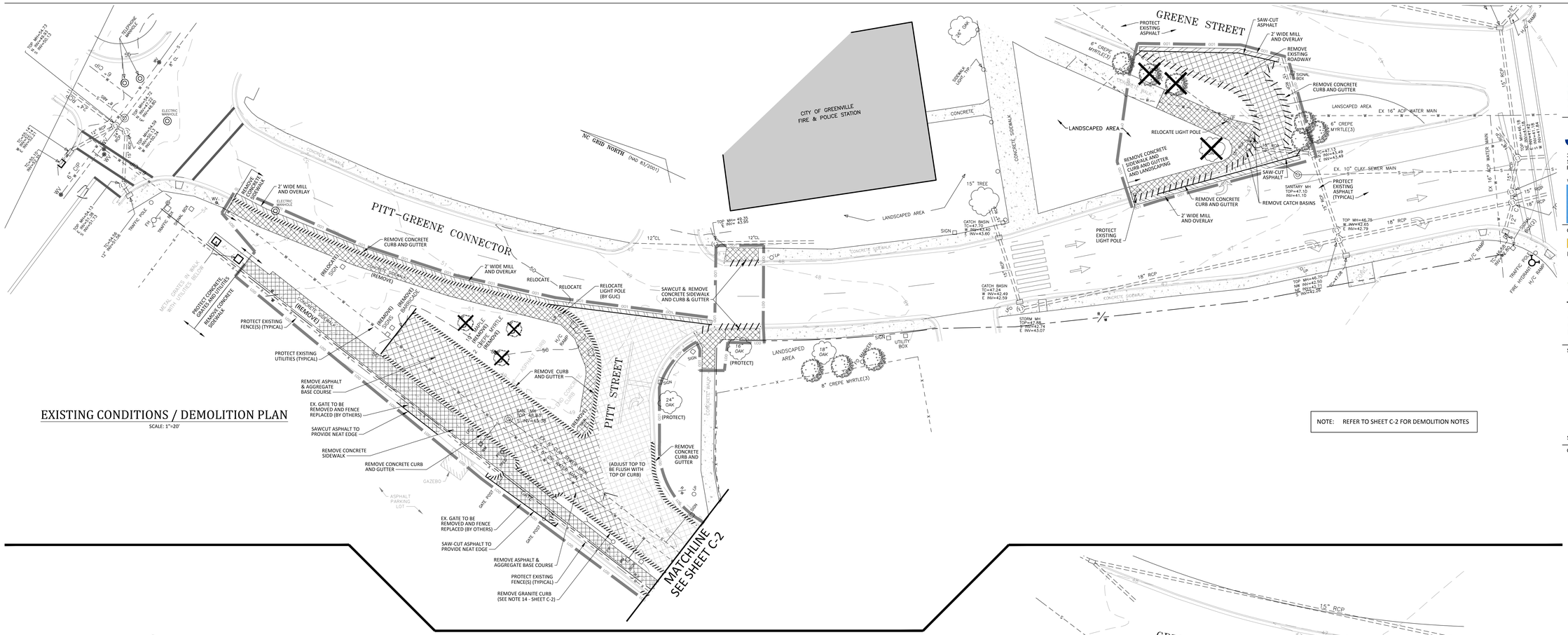

EXISTING CONDITIONS / DEMOLITION PLAN

SCALE: 1"=20'

NOTE: REFER TO SHEET C-2 FOR DEMOLITION NOTES

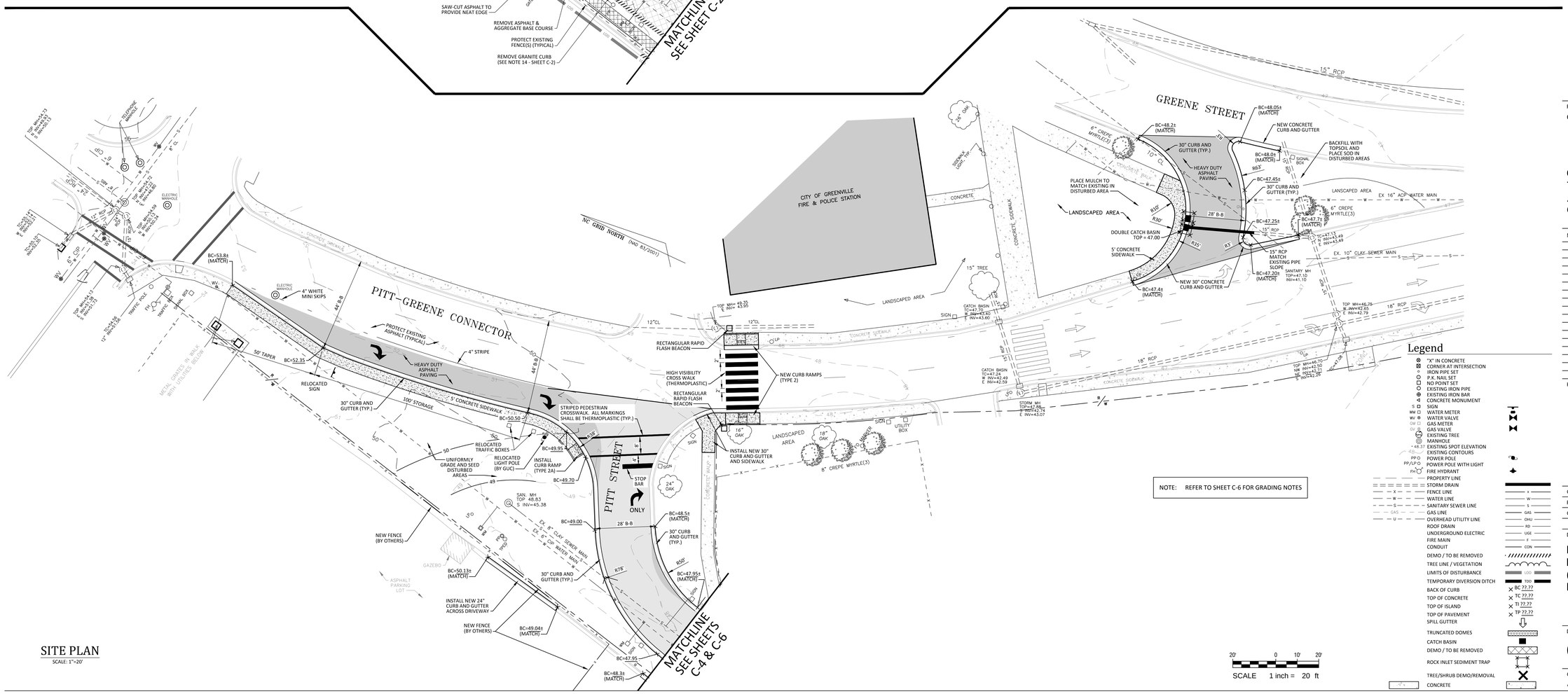

SITE PLAN

SCALE: 1"=20'

NOTE: REFER TO SHEET C-6 FOR GRADING NOTES

SCALE 1 inch = 20 ft

Legend

- "X" IN CONCRETE
- CORNER AT INTERSECTION
- IRON PIPE SET
- P.K. NAIL SET
- NO POINT SET
- EXISTING IRON PIPE
- EXISTING IRON BAR
- CONCRETE MONUMENT
- SIGN
- WATER METER
- WATER VALVE
- GAS METER
- GAS VALVE
- EXISTING TREE
- MANHOLE
- EXISTING SPOT ELEVATION
- EXISTING CONTOURS
- POWER POLE
- POWER POLE WITH LIGHT
- FIRE HYDRANT
- PROPERTY LINE
- STORM DRAIN
- FENCE LINE
- WATER LINE
- SANITARY SEWER LINE
- GAS LINE
- OVERHEAD UTILITY LINE
- ROOF DRAIN
- UNDERGROUND ELECTRIC
- FIRE MAIN
- CONDUIT
- DEMO / TO BE REMOVED
- TREE LINE / VEGETATION
- LIMITS OF DISTURBANCE
- TEMPORARY DIVERSION DITCH
- BACK OF CURB
- TOP OF CONCRETE
- TOP OF ISLAND
- TOP OF PAVEMENT
- SPILL GUTTER
- TRUNCATED DOMES
- CATCH BASIN
- DEMO / TO BE REMOVED
- ROCK INLET SEDIMENT TRAP
- TREE/SHRUB DEMO/REMOVAL
- CONCRETE

Greenville NORTH CAROLINA

JACOBS

333 Fayetteville Street
Suite 1100
Raleigh, NC 27601

www.jacobs.com

AYERS SAINT GROSS

Consultants:

Coaly Design
Landscape Architecture + Land Planning

ARK Consulting Group, PLLC
Engineers & Planners

3280 Charles Blvd. | Suite B
Greenville, NC 27858
(252) 558-0888
NC License: P-1199

Seals:

NORTH CAROLINA PROFESSIONAL SEAL 28425 ENGINEER SCOTT T. ANDERSON

9/10/2016

SCOTT T. ANDERSON, P.E., LICENSE NO. 28425

General Notes:

Project Client:
CITY OF GREENVILLE

GREENVILLE TRANSPORTATION ACTIVITY CENTER

600 S. Pitt Street, Greenville, NC

Number	Description	Date
0	IFC	05-10-2016

Key Plan:

Project North

CAD File:	
Project No.:	L3005900
Copyright:	2015 Jacobs Engineering Group

Drawing Sheet Title:

ROADWAY IMPROVEMENTS PLAN (Pitt Street and Pitt-Greene Connector)

Drawing Sheet Number:

C-7

Owner's Drawing Sheet No.:

Ark Drawing No. E-1004

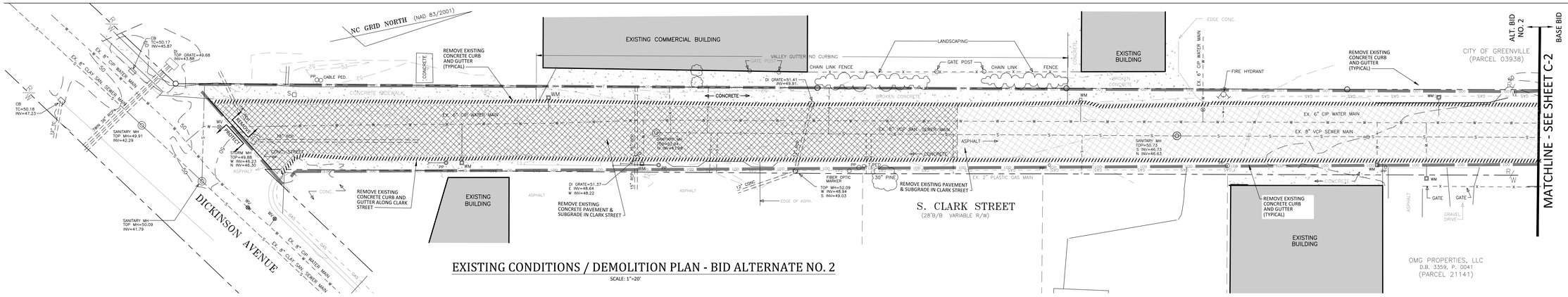

EXISTING CONDITIONS / DEMOLITION PLAN - BID ALTERNATE NO. 2

SCALE: 1"=20'

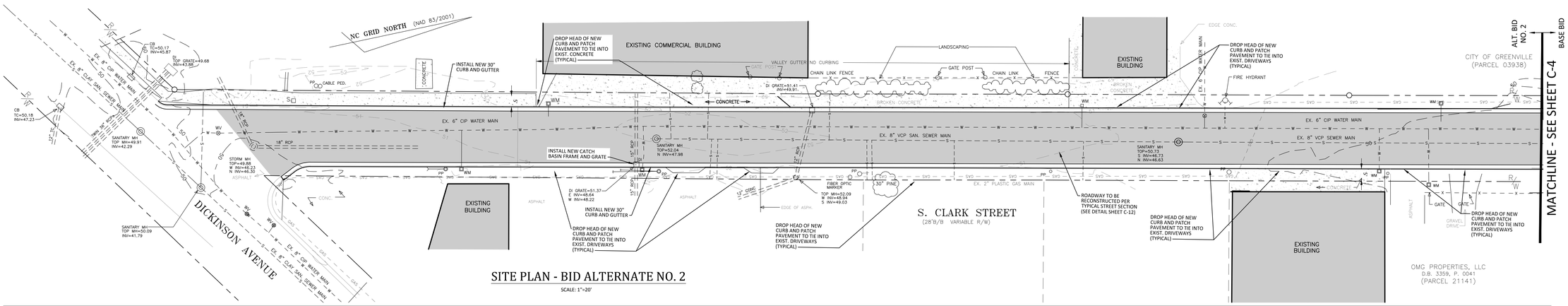

SITE PLAN - BID ALTERNATE NO. 2

SCALE: 1"=20'

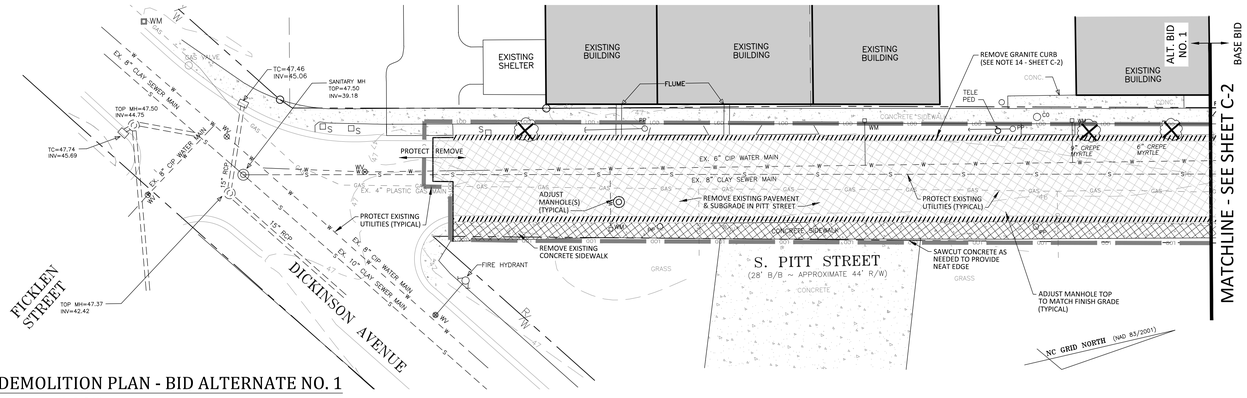

EXISTING CONDITIONS / DEMOLITION PLAN - BID ALTERNATE NO. 1

SCALE: 1"=20'

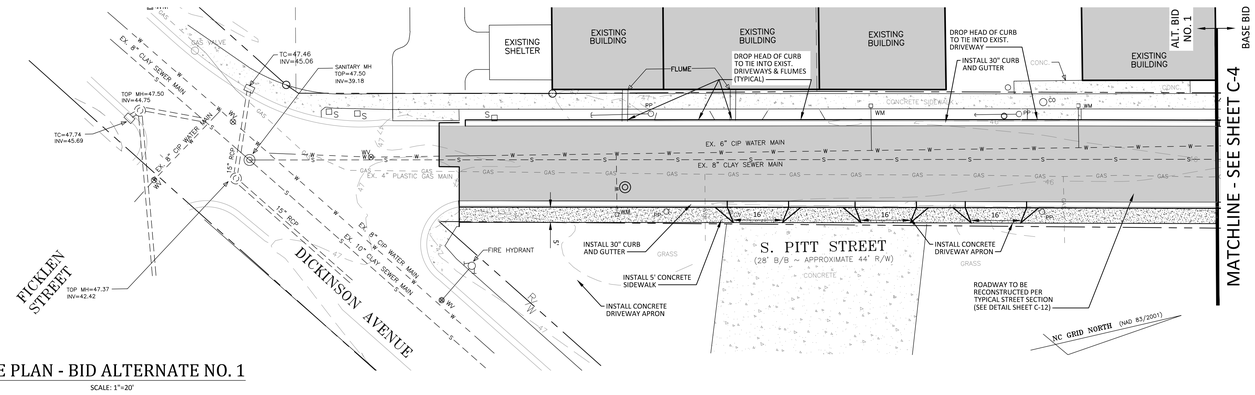

SITE PLAN - BID ALTERNATE NO. 1

SCALE: 1"=20'

NOTE: REFER TO SHEET C-2 FOR DEMOLITION NOTES

NOTE: REFER TO SHEET C-6 FOR GRADING NOTES

Legend

- "X" IN CONCRETE
- CORNER AT INTERSECTION
- IRON PIPE SET
- P.K. NAIL SET
- NO POINT SET
- EXISTING IRON PIPE
- EXISTING IRON BAR
- CONCRETE MONUMENT
- SIGN
- WATER METER
- WATER VALVE
- GAS METER
- GAS VALVE
- EXISTING TREE
- MANHOLE
- EXISTING SPOT ELEVATION
- EXISTING CONTOURS
- POWER POLE
- POWER POLE WITH LIGHT
- FIRE HYDRANT
- PROPERTY LINE
- STORM DRAIN
- FENCE LINE
- WATER LINE
- SANITARY SEWER LINE
- GAS LINE
- OVERHEAD UTILITY LINE
- ROOF DRAIN
- UNDERGROUND ELECTRIC
- FIRE MAIN
- CONDUIT
- DEMO / TO BE REMOVED
- TREE LINE / VEGETATION
- LIMITS OF DISTURBANCE
- TEMPORARY DIVERSION DITCH
- BACK OF CURB
- TOP OF CONCRETE
- TOP OF ISLAND
- TOP OF PAVEMENT
- SPILL GUTTER
- TRUNCATED DOMES
- CATCH BASIN
- DEMO / TO BE REMOVED
- ROCK INLET SEDIMENT TRAP
- TREE/SHRUB DEMO/REMOVAL
- CONCRETE
- BACTERIOLOGICAL SAMPLE POINT

20' 0 10' 20'

SCALE 1 inch = 20 ft

Greenville NORTH CAROLINA

JACOBS

333 Fayetteville Street
Suite 1100
Raleigh, NC 27601

www.jacobs.com

AYERS SAINT GROSS

Consultants:

Coaly Design
Landscape Architecture + Land Planning

ARK Consulting Group, PLLC
Engineers & Planners

3280 Charles Blvd. | Suite B
Greenville, NC 27858
(252) 558-0888
NC License: P-1199

Seals:

NORTH CAROLINA PROFESSIONAL SEAL 28425 ENGINEER SCOTT T. ANDERSON
9/10/2016

SCOTT T. ANDERSON, P.E., LICENSE NO. 28425

General Notes:

Project Client:
CITY OF GREENVILLE

GREENVILLE TRANSPORTATION ACTIVITY CENTER
600 S. Pitt Street, Greenville, NC

Number	Description	Date
0	IFC	05-10-2016

Key Plan:

Project North

CAD File:

Project No.: L3005900

Copyright: 2015 Jacobs Engineering Group

Drawing Sheet Title:

ROADWAY IMPROVEMENT PLAN
S. Pitt Street and
S. Clark Street
(Alternate Bids Nos. 1 & 2)

Drawing Sheet Number:

C-8

Owner's Drawing Sheet No.:

Ark Drawing No. E-1004

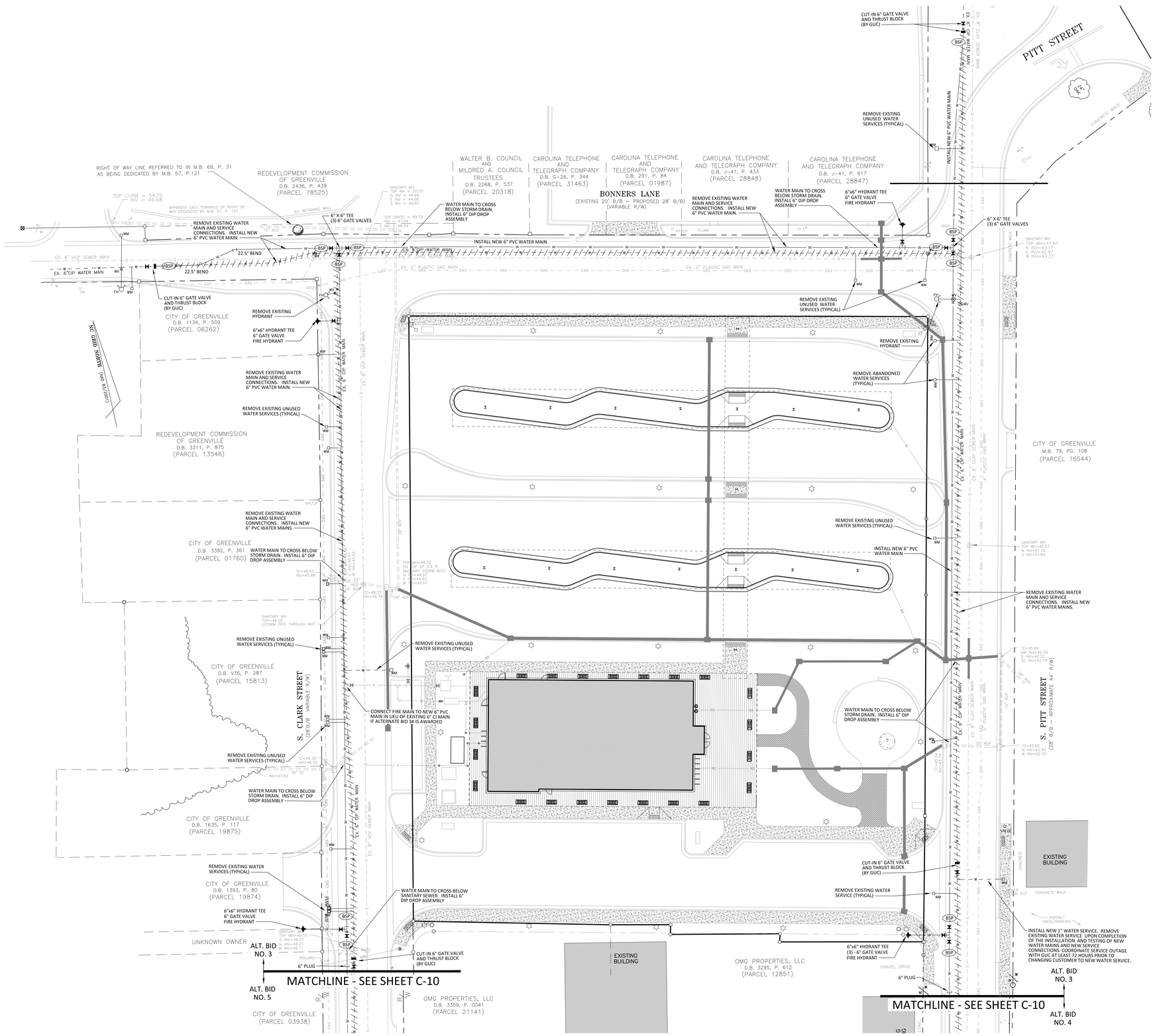

Legend

- "X" IN CONCRETE
- CORNER AT INTERSECTION
- IRON PIPE SET
- P.K. NAIL SET
- NO POINT SET
- EXISTING IRON PIPE
- EXISTING IRON BAR
- CONCRETE MONUMENT
- SIGN
- WATER METER
- WATER VALVE
- GAS METER
- GAS VALVE
- EXISTING TREE
- MANHOLE
- EXISTING SPOT ELEVATION
- EXISTING CONTOURS
- POWER POLE
- POWER POLE WITH LIGHT
- FIRE HYDRANT
- PROPERTY LINE
- STORM DRAIN
- FENCE LINE
- WATER LINE
- SANITARY SEWER LINE
- GAS LINE
- OVERHEAD UTILITY LINE
- ROOF DRAIN
- UNDERGROUND ELECTRIC
- FIRE MAIN
- CONDUIT
- DEMO / TO BE REMOVED
- TREE LINE / VEGETATION
- LIMITS OF DISTURBANCE
- TEMPORARY DIVERSION DITCH
- BACK OF CURB
- TOP OF CONCRETE
- TOP OF ISLAND
- TOP OF PAVEMENT
- SPILL GUTTER
- TRUNCATED DOMES
- CATCH BASIN
- DEMO / TO BE REMOVED
- ROCK INLET SEDIMENT TRAP
- TREE/SHRUB DEMO/REMOVAL
- CONCRETE
- BACTERIOLOGICAL SAMPLE POINT

Utility Notes:

1. SITE UTILITY CONTRACTOR IS RESPONSIBLE FOR COORDINATING WITH UTILITY PROVIDERS FOR THE RELOCATION / ABANDONMENT OF EXISTING UTILITIES AND INSTALLATION OF NEW UTILITY SERVICES AS WELL AS FEES ASSOCIATED WITH SUCH WORK.
2. EXISTING WATER SERVICES NOTED TO BE ABANDONED SHALL BE ABANDONED AT THEIR CONNECTION TO THE EXISTING WATER MAIN. REMOVE SERVICE TUBING, CLOSE CORPORATION STOP AND INSTALL CAP. IF CORPORATION STOP WILL NOT CLOSE, CUT SERVICE PIPING FROM CORPORATION STOP LEAVING ENOUGH PIPE TO CRIMP.
3. EXISTING FIRE HYDRANTS SHALL BE SALVAGED AND DELIVERED TO THE GUC OPERATIONS CENTER ON MUMFORD ROAD BY THE SITE UTILITY CONTRACTOR.
4. SITE UTILITY CONTRACTOR SHALL NOTIFY GREENVILLE UTILITIES COMMISSION AT (252) 551-1586 AT LEAST 72 HOURS PRIOR TO BEGINNING WORK ON ANY GUC OWNED FACILITIES OR ON ANY FACILITIES TO BE ACCEPTED FOR PERMANENT OPERATION AND MAINTENANCE BY GUC.
5. SITE UTILITY CONTRACTOR IS RESPONSIBLE FOR PHASING WATER CONSTRUCTION TO FACILITATE CONSTRUCTION ACCESS TO THE GTAC PROJECT SITE AND TO MAINTAIN WATER SERVICE TO THE GTAC SITE AND ADJACENT GUC CUSTOMERS.
6. SITE UTILITY CONTRACTOR SHALL PREPARE A PHASING PLAN FOR INSTALLATION, PRESSURE TESTING AND DISINFECTION OF THE NEW WATER MAINS AND OBTAIN APPROVAL OF THE PHASING PLAN FROM GUC PRIOR TO BEGINNING WORK.
7. TEMPORARY BACTERIOLOGICAL SAMPLE POINTS (BSP) SHALL BE CONSTRUCTED OF THE SAME MATERIALS AS ONE INCH WATER SERVICES. SAMPLE POINTS SHALL BE INSTALLED SUCH THAT THE ANGLE BALL VALVE IS SECURELY LOCATED 36" MIN. ABOVE FINISH GRADE. UPON APPROVAL OF FINAL BACTERIOLOGICAL SAMPLES, THE SERVICE TUBING AND BALL VALVE SHALL BE REMOVED, THE CORPORATION STOP CLOSED AND A CAP PLACED ON THE CORPORATION STOP.

Utility Providers:

STORM DRAINAGE:
City of Greenville
Contact: Scott Godefroy, PE
Phone: (252) 329-4525

ELECTRIC UTILITIES:
Greenville Utilities Commission
Contact: Chris Corey
Phone: (252) 551-1586

WATER & SANITARY SEWER:
Greenville Utilities Commission
Contact: Cliff Cahoon, PE
Phone: (252) 551-3386

TELEPHONE:
CenturyLink
Contact: Pam Isles
Phone: (252) 355-4544

GAS:
Greenville Utilities Commission
Contact: Cheryl Barrett
Phone: (252) 551-1596

CABLE TV:
SuddenLink
Contact: Nathan Barnhill
Phone: (252) 792-9182

PUBLIC STREETS:
City of Greenville
Contact: Scott Godefroy, PE
Phone: (252) 329-4525

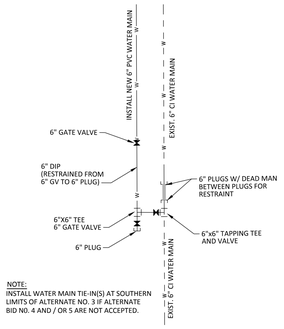

NOTE:
INSTALL WATER MAIN TIE-IN(S) AT SOUTHERN LIMITS OF ALTERNATE NO. 3 IF ALTERNATE BID NO. 4 AND / OR 5 ARE NOT ACCEPTED.

WATER MAIN TIE-IN DETAIL

(NOT TO SCALE)

Greenville NORTH CAROLINA

JACOBS
333 Fayetteville Street
Suite 1100
Raleigh, NC 27601
www.jacobs.com

AYERS SAINT GROSS

Consultants:

Coaly Design
Landscape Architecture + Land Planning

ARK Consulting Group, PLLC
Engineers & Planners
3280 Charles Blvd. | Suite B
Greenville, NC 27858
(252) 558-0888
NC License: P-1199

Seals:

NORTH CAROLINA PROFESSIONAL SEAL 28425 ENGINEER SCOTT T. ANDERSON
5/10/2016

SCOTT T. ANDERSON, P.E., LICENSE NO. 28425

General Notes:

Project Client:
CITY OF GREENVILLE

GREENVILLE TRANSPORTATION ACTIVITY CENTER

600 S. Pitt Street, Greenville, NC

Number	Description	Date
0	IFC	05-10-2016

Key Plan:

Project North

CAD File:

Project No.: L3005900

Copyright: 2015 Jacobs Engineering Group

Drawing Sheet Title:

Water Main Replacement Plan (Alternate Bid No. #3)

Drawing Sheet Number:

C-9

Owner's Drawing Sheet No.:
Ark Drawing No. E-1004

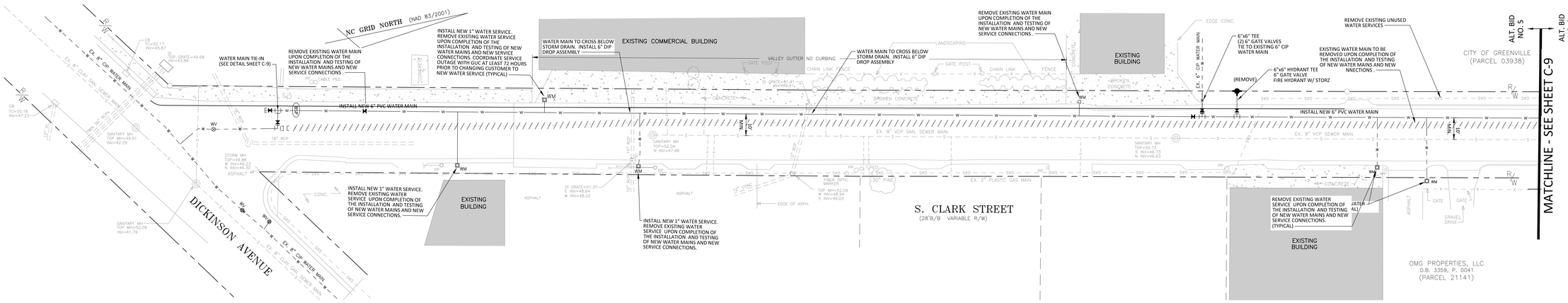

CLARK STREET WATER MAIN REPLACEMENT - BID ALTERNATE NO. 5

SCALE: 1"=20'

Utility Notes:

1. SITE UTILITY CONTRACTOR IS RESPONSIBLE FOR COORDINATING WITH UTILITY PROVIDERS FOR THE RELOCATION / ABANDONMENT OF EXISTING UTILITIES AND INSTALLATION OF NEW UTILITY SERVICES AS WELL AS FEES ASSOCIATED WITH SUCH WORK.
2. EXISTING WATER SERVICES NOTED TO BE ABANDONED SHALL BE ABANDONED AT THEIR CONNECTION TO THE EXISTING WATER MAIN. REMOVE SERVICE TUBING, CLOSE CORPORATION STOP AND INSTALL CAP. IF CORPORATION STOP WILL NOT CLOSE, CUT SERVICE PIPING FROM CORPORATION STOP LEAVING ENOUGH PIPE TO CRIMP.
3. EXISTING FIRE HYDRANTS SHALL BE SALVAGED AND DELIVERED TO THE GUC OPERATIONS CENTER ON MUMFORD ROAD BY THE SITE UTILITY CONTRACTOR.
4. SITE UTILITY CONTRACTOR SHALL NOTIFY GREENVILLE UTILITIES COMMISSION AT (252) 551-1586 AT LEAST 72 HOURS PRIOR TO BEGINNING WORK ON ANY GUC OWNED FACILITIES OR ON ANY FACILITIES TO BE ACCEPTED FOR PERMANENT OPERATION AND MAINTENANCE BY GUC.
5. SITE UTILITY CONTRACTOR IS RESPONSIBLE FOR PHASING WATER CONSTRUCTION TO FACILITATE CONSTRUCTION ACCESS TO THE GTAC PROJECT SITE AND TO MAINTAIN WATER SERVICE TO THE GTAC SITE AND ADJACENT GUC CUSTOMERS.
6. SITE UTILITY CONTRACTOR SHALL PREPARE A PHASING PLAN FOR INSTALLATION, PRESSURE TESTING AND DISINFECTION OF THE NEW WATER MAINS AND OBTAIN APPROVAL OF THE PHASING PLAN FROM GUC PRIOR TO BEGINNING WORK.
7. TEMPORARY BACTERIOLOGICAL SAMPLE POINTS (BSP) SHALL BE CONSTRUCTED OF THE SAME MATERIALS AS ONE INCH WATER SERVICES. SAMPLE POINTS SHALL BE INSTALLED SUCH THAT THE ANGLE BALL VALVE IS SECURELY LOCATED 36" MIN. ABOVE FINISH GRADE. UPON APPROVAL OF FINAL BACTERIOLOGICAL SAMPLES, THE SERVICE TUBING AND BALL VALVE SHALL BE REMOVED, THE CORPORATION STOP CLOSED AND A CAP PLACED ON THE CORPORATION STOP.

Utility Providers:

STORM DRAINAGE:
City of Greenville
Contact: Scott Godefroy, PE
Phone: (252) 329-4525

ELECTRIC UTILITIES:
Greenville Utilities Commission
Contact: Chris Corey
Phone: (252) 551-1586

WATER & SANITARY SEWER:
Greenville Utilities Commission
Contact: Cliff Cahoon, PE
Phone: (252) 551-3386

TELEPHONE:
CenturyLink
Contact: Pam Isles
Phone: (252) 355-4544

GAS:
Greenville Utilities Commission
Contact: Cheryl Barrett
Phone: (252) 551-1596

CABLE TV:
SuddenLink
Contact: Nathan Barnhill
Phone: (252) 792-9182

PUBLIC STREETS:
City of Greenville
Contact: Scott Godefroy, PE
Phone: (252) 329-4525

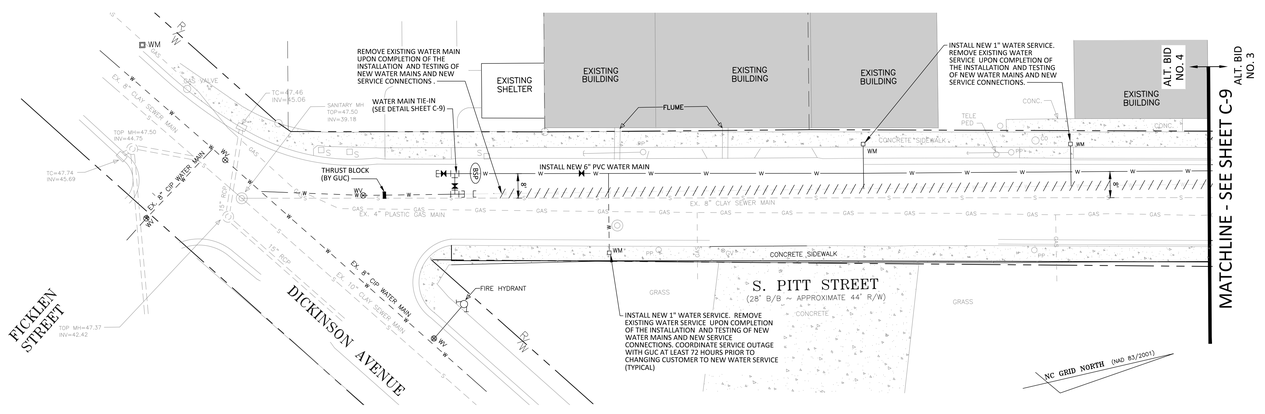

PITT STREET WATER MAIN REPLACEMENT - BID ALTERNATE NO. 4

SCALE: 1"=20'

Legend

- "X" IN CONCRETE
- CORNER AT INTERSECTION
- IRON PIPE SET
- P.K. NAIL SET
- NO POINT SET
- EXISTING IRON PIPE
- EXISTING IRON BAR
- CONCRETE MONUMENT
- SIGN
- WATER METER
- WATER VALVE
- GAS METER
- GAS VALVE
- EXISTING TREE
- MANHOLE
- EXISTING SPOT ELEVATION
- EXISTING CONTOURS
- POWER POLE
- POWER POLE WITH LIGHT
- FIRE HYDRANT
- PROPERTY LINE
- STORM DRAIN
- FENCE LINE
- WATER LINE
- SANITARY SEWER LINE
- GAS LINE
- OVERHEAD UTILITY LINE
- ROOF DRAIN
- UNDERGROUND ELECTRIC
- FIRE MAIN
- CONDUIT
- DEMO / TO BE REMOVED
- TREE LINE / VEGETATION
- LIMITS OF DISTURBANCE
- TEMPORARY DIVERSION DITCH
- BACK OF CURB
- TOP OF CONCRETE
- TOP OF ISLAND
- TOP OF PAVEMENT
- SPILL GUTTER
- TRUNCATED DOMES
- CATCH BASIN
- DEMO / TO BE REMOVED
- ROCK INLET SEDIMENT TRAP
- TREE/SHRUB DEMO/REMOVAL
- CONCRETE
- BACTERIOLOGICAL SAMPLE POINT

20' 0 10' 20'

SCALE 1 inch = 20 ft

Greenville NORTH CAROLINA

JACOBS
333 Fayeteeville Street
Suite 1100
Raleigh, NC 27601
www.jacobs.com

AYERS SAINT GROSS

Consultants:

Coaly Design
Landscape Architecture + Land Planning

ARK Consulting Group, PLLC
Engineers & Planners
3280 Charles Blvd. | Suite B
Greenville, NC 27858
(252) 558-0888
NC License: P-1199

Seals:

NORTH CAROLINA PROFESSIONAL SEAL 28425 ENGINEER SCOTT T. ANDERSON
9/10/2016

SCOTT T. ANDERSON, P.E., LICENSE NO. 28425

General Notes:

Project Client:
CITY OF GREENVILLE

GREENVILLE TRANSPORTATION ACTIVITY CENTER
600 S. Pitt Street, Greenville, NC

Number	Description	Date
0	IFC	05-10-2016

Key Plan: Project North

CAD File:
Project No.: L3005900
Copyright: 2015 Jacobs Engineering Group

Drawing Sheet Title:
WATER MAIN REPLACEMENT PLAN (Alternate Bids Nos. 4 & 5)

Drawing Sheet Number:
C-10

Owner's Drawing Sheet No.:
Ark Drawing No. E-1004

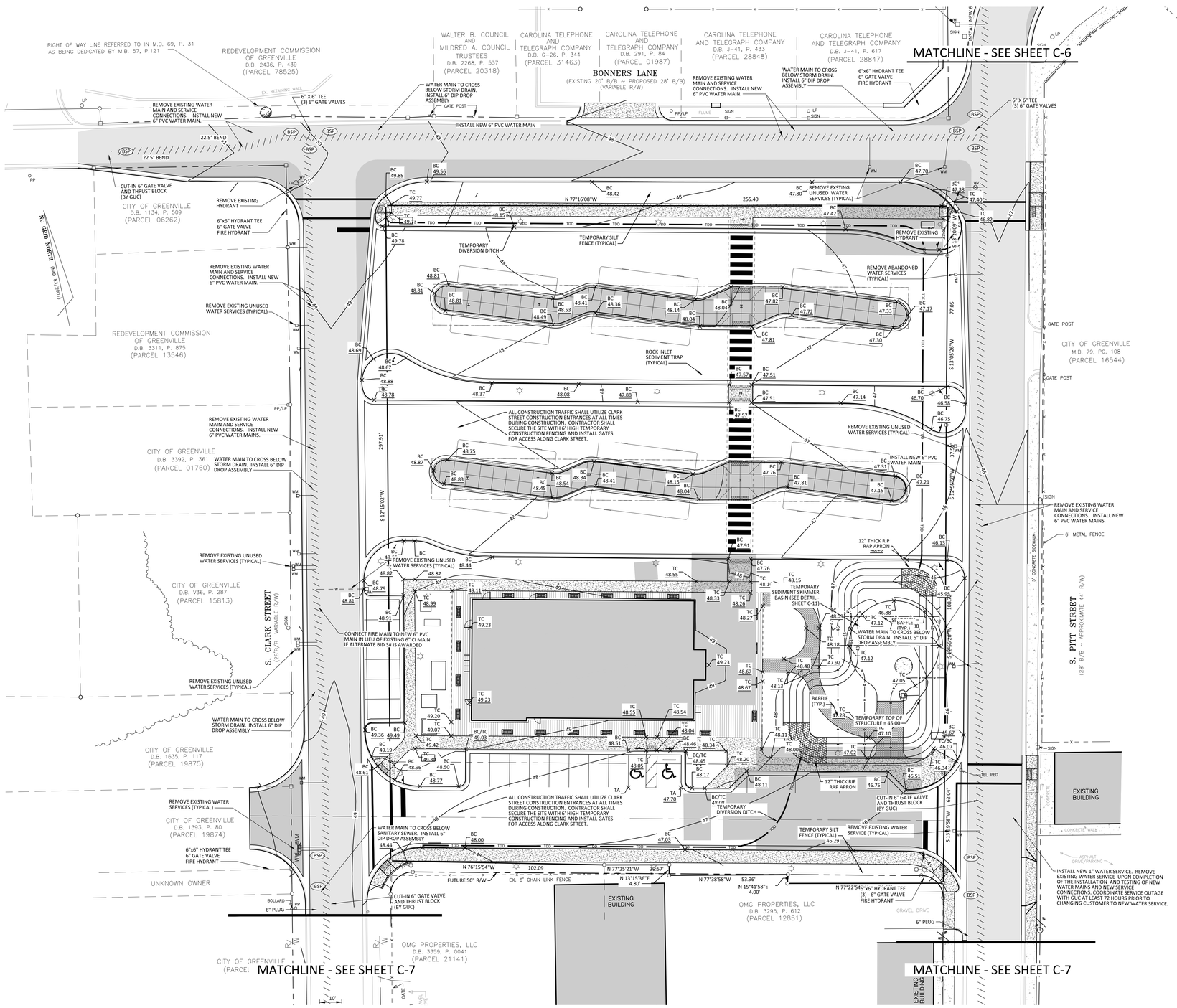

Legend

- "X" IN CONCRETE
- CORNER AT INTERSECTION
- IRON PIPE SET
- P.K. NAIL SET
- NO POINT SET
- EXISTING IRON PIPE
- EXISTING IRON BAR
- CONCRETE MONUMENT
- SIGN
- WATER METER
- WATER VALVE
- GAS METER
- GAS VALVE
- EXISTING TREE
- MANHOLE
- 48.37 EXISTING SPOT ELEVATION
- EXISTING CONTOURS
- POWER POLE
- POWER POLE WITH LIGHT
- FIRE HYDRANT
- PROPERTY LINE
- STORM DRAIN
- FENCE LINE
- WATER LINE
- SANITARY SEWER LINE
- GAS LINE
- OVERHEAD UTILITY LINE
- ROOF DRAIN
- UNDERGROUND ELECTRIC
- FIRE MAIN
- CONDUIT
- DEMO / TO BE REMOVED
- TREE LINE / VEGETATION
- LIMITS OF DISTURBANCE
- TEMPORARY DIVERSION DITCH
- BACK OF CURB — BC ??.??
- TOP OF CONCRETE — TC ??.??
- TOP OF ISLAND — TI ??.??
- TOP OF PAVEMENT — TP ??.??
- SPILL GUTTER
- TRUNCATED DOMES
- CATCH BASIN
- DEMO / TO BE REMOVED
- ROCK INLET SEDIMENT TRAP

Vegetation Legend:

- PROPOSED LARGE TREE
- PROPOSED SMALL TREE
- PROPOSED STREET TREE

Bufferyard Notes:

SITE DATA: LAND AREA FOR VEGETATION REQUIREMENTS: N/A (CD ZONING)

A. REQUIRED VEGETATION FOR LOT:
   LARGE TREES: 0
   SMALL TREES: 0
   SHRUBS: 0

B. REQUIRED STREET VEGETATION:
   LARGE TREES: 0

C. REQUIRED SCREENING VEGETATION: NONE

D. REQUIRED VEGETATION LOCATED IN EASEMENTS: NONE

2.

A. MINIMUM PLANT SIZES SHALL BE IN ACCORDANCE WITH THE ZONING REGULATIONS AS FOLLOWS:

PLANTING MATERIAL TYPE	MINIMUM PLANTING SIZE
1. LARGE TREE - SINGLE STEM	10' (HEIGHT) AND 2" CALIPER
MULTI-STEM	10' (HEIGHT)
2. SMALL TREE	8' (HEIGHT) AND 1.5" CALIPER
3. SHRUB	18" (HEIGHT), EXCEPT AS PROVIDED UNDER SECTION 9-4-267(a)

B. NO PORTION OF ANY PARKING AREA, INCLUDING ANY DRIVEWAY, PARKING SPACE, DRIVE AISLE OR TURNING AREA, SHALL BE LOCATED MORE THAN THIRTY (30) FEET FROM AN ON-SITE SMALL TREE OR MORE THAN SEVENTY-FIVE (75) FEET FROM AN ON-SITE LARGE TREE. FOR PURPOSES OF THIS SECTION, THE MEASUREMENT SHALL BE FROM THE FARTHEST EDGE OF THE SUBJECT AREA TO THE CENTER OF THE BASE OF THE CLOSEST QUALIFYING TREE.

C. SITE PLAN APPROVAL FROM THE RESPECTIVE EASEMENT HOLDER SHALL BE CONSTRUED AS APPROVAL OF ALL ENCROACHMENTS, AS SHOWN. ON THIS PLAN. (SEE NOTE ON ITEM 1.D.)

D. THE FOLLOWING VEGETATION MATERIALS, AS LISTED BY COMMON NAME, SHALL CONSTITUTE NOT MORE THAN TWENTY-FIVE (25) PERCENT OF THE TOTAL REQUIREMENT FOR THE SPECIFIC CATEGORY:

   A. LARGE TREE CATEGORY: RIVER BIRCH

   B. SMALL TREE CATEGORY: ARISTOCRAT PEAR, BRADFORD PEAR, CAPITOL PEAR, CLEVELAND SELECT PEAR

   C. EVERGREEN SHRUB CATEGORY: RED TIP PHOTINIA

E. DUMPSTER/COMPACTOR SHALL BE SCREENED ON 3 SIDES IN ACCORDANCE WITH SECTION 9-4-268 (h) OF THE CITY CODE.

F. EXISTING SUBSTITUTE VEGETATION MATERIALS HAVE BEEN NOTED INCLUDING THEIR SPECIFIC LOCATION(S), TYPE(S), AND SIZE(S).

G. EXISTING SUBSTITUTE VEGETATION MATERIAL SHALL BE PROTECTED FROM SITE DEVELOPMENT ACTIVITIES IN ACCORDANCE WITH SECTION 9-4-265 (F) OF THE CITY CODE.

H. NO LARGE TREES TO BE PLANTED WITHIN SANITARY SEWER, WATERLINE OR ELECTRIC EASEMENTS.

I. PARKING LOT AREA TO BE SCREENED IN ACCORDANCE WITH SECTION 9-4-268(L)9 OF THE CITY CODE. PARKING AREA SCREENING SHALL BE INSTALLED WITHIN A 10 FOOT AREA ADJACENT TO AND EXTENDING THE FULL STREET SIDE WIDTH OF ALL PARKING AREAS WHICH FRONT A PUBLIC OR PRIVATE STREET.

J. MINIMUM OF 3 FEET CLEARANCE MUST BE MAINTAINED AROUND ALL FIRE HYDRANTS IN ACCORDANCE WITH STATE BUILDING CODE.

K. ALL REQUIRED PLANT MATERIAL (LARGE AND SMALL TREES, SHRUBS) LOCATED IN A SCREENING BUFFERYARD (C, D, E & F) SHALL BE EVERGREEN.

SCALE 1 inch = 20 ft

Greenville NORTH CAROLINA

JACOBS
333 Fayetteville Street
Suite 1100
Raleigh, NC 27601
www.jacobs.com

AYERS SAINT GROSS

Consultants:

Coaly Design
Landscape Architecture + Land Planning

ARK Consulting Group, PLLC
Engineers & Planners
3280 Charles Blvd. | Suite B
Greenville, NC 27858
(252) 558-0888
NC License: P-1199

Seals:

NORTH CAROLINA PROFESSIONAL SEAL 28425 ENGINEER SCOTT T. ANDERSON

9/10/2016

SCOTT T. ANDERSON, P.E., LICENSE NO. 28425

General Notes:

Project Client:
CITY OF GREENVILLE

GREENVILLE TRANSPORTATION ACTIVITY CENTER

600 S. Pitt Street, Greenville, NC

Number	Description	Date
0	IFC	05-10-2016

Key Plan:

Project North

CAD File:

Project No.: L3005900

Copyright: 2015 Jacobs Engineering Group

Drawing Sheet Title:

Bus Routes Plan (From Pitt Street)

C-XX

Drawing Sheet Number:

Owner's Drawing Sheet No.:

Ark Drawing No. E-1004

NOTES:
1. PROVIDE TURNING RADIUS SUFFICIENT TO ACCOMMODATE LARGE TRUCKS.
2. LOCATE ENTRANCES TO PROVIDE FOR UTILIZATION BY ALL CONSTRUCTION VEHICLES.
3. MUST BE MAINTAINED IN A CONDITION WHICH WILL PREVENT TRACKING OR DIRECT FLOW OF MUD ONTO STREETS. PERIODIC TOPDRESSING WITH STONE WILL BE NECESSARY.
4. ANY MATERIAL TRACKED ONTO THE ROADWAY MUST BE CLEANED UP IMMEDIATELY.
5. LOCATE GRAVEL CONSTRUCTION ENTRANCE AT ALL POINTS OF INGRESS AND EGRESS UNTIL SITE IS STABILIZED. PROVIDE FREQUENT CHECKS OF THE DEVICE AND TIMELY MAINTENANCE.
6. NUMBER AND LOCATION OF CONSTRUCTION ENTRANCES TO BE DETERMINED BY THE ENGINEER.
7. USE CLASS 'A' STONE OR OTHER COARSE AGGREGATE APPROVED BY THE ENGINEER.
8. INSTALL CONSTRUCTION ENTRANCES IN A WAY TO PREVENT VEHICLES FROM BYPASSING CONSTRUCTION ENTRANCE LEAVING PROJECT SITE.

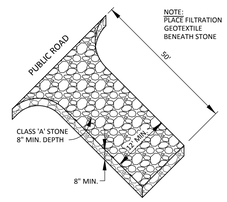

TEMPORARY GRAVEL CONSTRUCTION ENTRANCE

(CONSTRUCT IN ACCORDANCE WITH NCDOT DETAIL No. 1607.01)
(NOT TO SCALE)

NOTE:
ALL PARTIALLY COMPLETED STORM DRAINS SHALL BE PROTECTED AT THE END OF EACH DAY IN ACCORDANCE WITH THESE DETAILS.

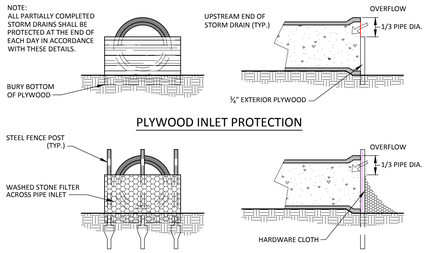

PLYWOOD INLET PROTECTION

STONE FILTER INLET PROTECTION

PIPE INLET PROTECTION (PLYWOOD AND STONE)

(NOT TO SCALE)

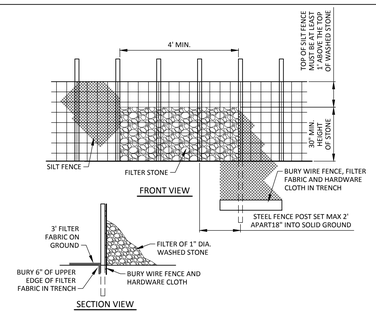

SILT FENCE OUTLET

(NOT TO SCALE)

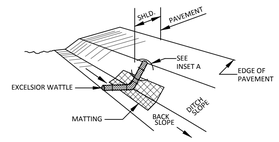

ISOMETRIC VIEW

NOTES:
USE MINIMUM 12 IN. DIAMETER EXCELSIOR WATTLE.

USE 2 FT. WOODEN STAKES WITH A 2 IN. BY 2 IN. NOMINAL CROSS SECTION.

ONLY INSTALL WATTLE(S) TO A HEIGHT IN DITCH SO FLOW WILL NOT WASH AROUND WATTLE AND SCOUR DITCH SLOPES AND AS DIRECTED.

INSTALL A MINIMUM OF 2 UPSLOPE STAKES AND 4 DOWNSLOPE STAKES AT AN ANGLE TO WEDGE WATTLE TO BOTTOM OF DITCH.

PROVIDE STAPLES MADE OF 0.125 IN. DIAMETER STEEL WIRE FORMED INTO A "U" SHAPE NOT LESS THAN 12" IN LENGTH.

INSTALL STAPLES APPROXIMATELY EVERY 1 LINEAR FOOT ON BOTH SIDES OF WATTLE AND AT EACH END TO SECURE IT TO THE SOIL.

INSTALL MATTING IN ACCORDANCE WITH SECTION 1631 OF THE STANDARD SPECIFICATIONS.

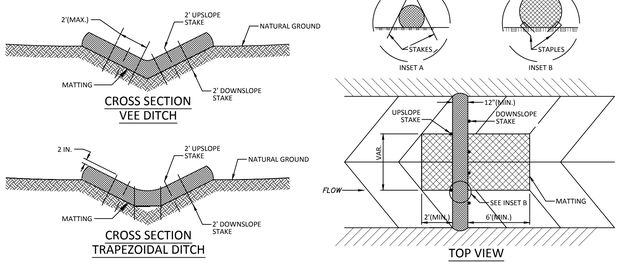

EXCELSIOR WATTLE DETAIL

(NOT TO SCALE)

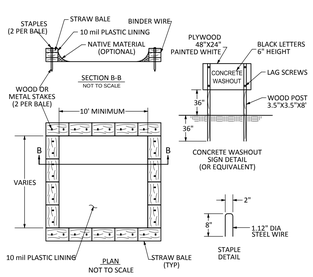

TYPE "ABOVE GRADE" WITH STRAW BALES

NOTES

1. ACTUAL LAYOUT TO BE DETERMINED IN THE FIELD.
2. A CONCRETE WASHOUT SIGN SHALL BE INSTALLED WITHIN 30' OF THE TEMPORARY CONCRETE WASHOUT FACILITY.
3. MATERIALS USED TO CONSTRUCT TEMPORARY CONCRETE WASHOUT FACILITIES SHALL BE REMOVED FROM THE SITE OF THE WORK AND DISPOSED OF OR RECYCLED.
4. HOLES, DEPRESSIONS OR OTHER GROUND DISTURBANCE CAUSED BY THE REMOVAL OF THE TEMPORARY CONCRETE WASHOUT FACILITIES SHALL BE BACKFILLED, REPAIRED, AND STABILIZED TO PREVENT EROSION.

CONCRETE WASHOUT

(NOT TO SCALE)

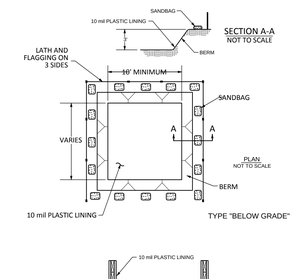

BLOCK AND GRAVEL DROP INLET SEDIMENT PROTECTION

(NOT TO SCALE)

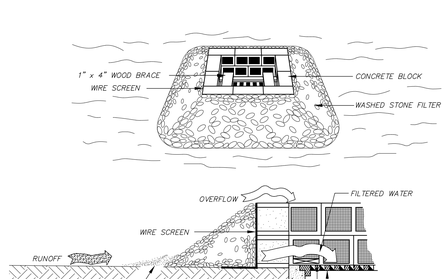

NOTES:
1. PLACE CONCRETE BLOCKS LENGTHWISE ON THEIR SIDES IN A SINGLE ROW AROUND THE PERIMETER OF THE INLET, WITH THE ENDS OF ADJACENT BLOCKS ABUTTING. THE HEIGHT CAN BE VARIED, DEPENDING ON DESIGN NEEDS, BY STACKING COMBINATIONS OF 4", 8", AND 12" WIDE BLOCKS. THE MINIMUM HEIGHT SHALL BE 12", THE MAXIMUM HEIGHT SHALL BE 24".
2. WIRE MESH OR HARDWARE CLOTH WITH 1/2" OPENINGS SHALL BE PLACED OVER THE OUTSIDE VERTICAL FACE (WEBBING) OF THE BLOCKS, TO PREVENT STONE FROM BEING WASHED THROUGH THE HOLES IN THE BLOCKS.
3. STONE SHALL BE PILED AGAINST THE WIRE TO THE TOP OF THE BLOCK. NCDOT #57 WASHED STONE.
4. CHECK DEVICE AFTER EACH RAIN. REPLACE WASHED STONE IF IT CLOGS WITH SEDIMENT.
5. SCRAP 1"x 4" BOARDS PLACED THROUGH THE HOLES OF CORNER BLOCKS PREVENTS COLLAPSE.

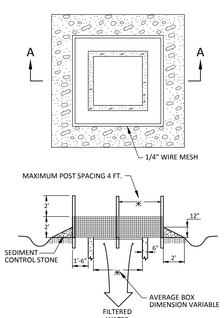

MULTI-DIRECTIONAL FLOW

ROCK INLET SEDIMENT TRAP

(NOT TO SCALE)

NOTES:
SEDIMENT CONTROL STONE SHALL BE NO. 5 OR NO. 57 AND SHALL BE PAID FOR AT THE CONTRACT UNIT PRICE PER TON "SEDIMENT CONTROL STONE."

WIRE MESH SHALL BE HARDWARE CLOTH 23 GAUGE MIN. AND SHALL HAVE 1/4 INCH MESH OPENINGS.
TOP OF WIRE MESH SHALL BE A MINIMUM OF ONE FOOT BELOW THE SHOULDER OR ANY DIVERSION POINT.

STEEL POST SHALL BE 5 FT. IN HEIGHT, BE INSTALLED 1.5 FT. DEEP MINIMUM, AND BE OF THE SELF-FASTENER ANGLE STEEL TYPE.

WOOD POST SHALL BE 6 FT. IN HEIGHT, BE INSTALLED TO 1.5 FT. DEEP MINIMUM, AND BE 3 INCHES IN DIAMETER. POST SPACING SHALL BE A MAXIMUM OF 4 FT.

INSPECT INLETS AT LEAST WEEKLY AND AFTER EACH SIGNIFICANT (.5 INCH OR GREATER) RAINFALL EVENT. CLEAR THE MESH WIRE OF ANY DEBRIS OR OTHER OBJECTS TO PROVIDE ADEQUATE FLOW FOR SUBSEQUENT RAINS. TAKE CARE NOT TO DAMAGE OR UNDERCUT THE WIRE MESH DURING SEDIMENT REMOVAL. REPLACE STONE AS NEEDED.

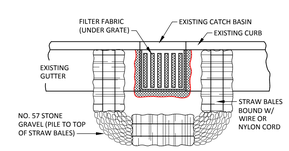

NOTES:

1. STRAW BALE SEDIMENT BARRIER SHALL BE PROVIDED ON THREE SIDES OF CATCH BASIN INLET AS SHOWN FOR ALL CATCH BASINS IN THE IMMEDIATE AREA OF CONSTRUCTION.
2. CONTRACTOR SHALL PLACE 32" (MINIMUM) WIDTH FILTER FABRIC UNDER GRATE OF CATCH BASIN AND STORM DRAIN INLETS BETWEEN STRAW BALES AS PART OF THE SEDIMENT BARRIER. FILTER FABRIC SHALL BE MIRAFI 140 OR EQUAL AND LAP OUTSIDE OF THE GRATE.
3. AFTER ABC STONE HAS BEEN PLACED FOR TEMPORARY PAVEMENT PATCH AND ALL SPOIL AND/OR FILL STOCKPILES REMOVED, THE SEDIMENT BARRIERS IN THE IMMEDIATE AREA SHALL BE REMOVED TO ALLOW FREE DRAINAGE EXCEPT WHERE DRAINAGE FROM THE NEXT AREA OF CONSTRUCTION IS TO THOSE SAME CATCH BASINS.

STRAW BALE SILT BARRIER WITH STONE AT CATCH BASIN

(NOT TO SCALE)

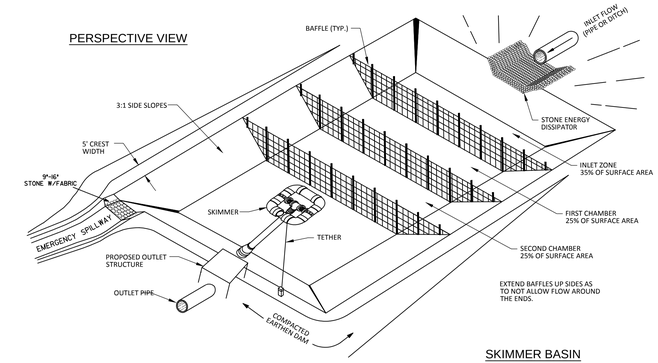

SKIMMER BASIN

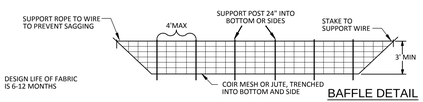

BAFFLE DETAIL

NOTE:
BAFFLES TO BE REMOVED UPON SITE STABILIZATION AND PRIOR TO EXCAVATION FOR FINAL CONTOURS FOR DRY DETENTION CELL.

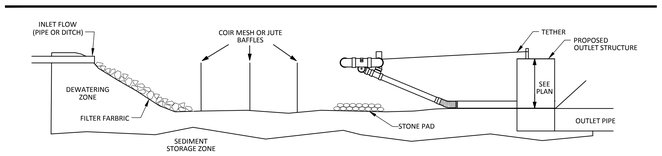

CROSS SECTION VIEW

NOTES:
1. SKIMMER IS TO BE A SURFACE DEWATERING DEVICE SUCH AS BMP SKIMMER OR APPROVED DEVICE.
2. SKIMMER SHOULD RISE TO LEVEL OF WEIR HEIGHT IN TEMPORARY BASIN OR TO RISER INLET.
3. ROPE ATTACHED TO SKIMMER TO HELP KEEP SKIMMER CLEAN.
4. SKIMMER SHALL BE 2" SKIMMER WITH 1" ORIFICE AS MANUFACTURED BY J.W. FAIRCLOTH & SON, INC. (919) 732-1244 OR 2" SKIMMER MANUFACTURED BY IAS, LLC (336) 698-4275.

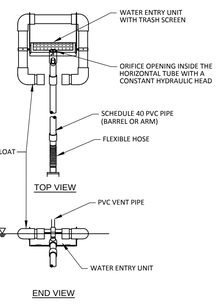

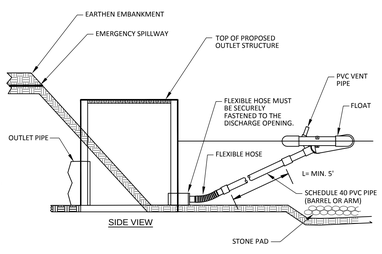

SKIMMER DISCHARGE SYSTEM WITH OUTLET STRUCTURE

(NOT TO SCALE)

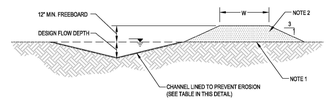

TYPICAL VEE-SHAPED DIVERSION

NOTES:

1. REMOVE ANY EXISTING VEGETATION AND SCARIFY OR BENCH ADJACENT SOILS PRIOR TO PLACING BERM.
2. BERM MATERIALS MUST BE ADEQUATELY COMPACTED AND IMMEDIATELY STABILIZED.
3. DIVERSION DITCHES/BERMS MUST BE IMMEDIATELY STABILIZED TO PREVENT EROSION AND TRANSPORT OF SEDIMENT.
4. FOLLOW 02300 EARTHWORK SPECIFICATION.

DIVERSION DITCHES

ID	LENGTH (FT.)	LONGITUDINAL SLOPE	DESIGN FLOW DEPTH (IN.)	VELOCITY (FPS)	EROSION PROTECTION TYPE	CHANNEL DEPTH (IN.)
DD1	395	0.75%	8	1.8800	STRAW WATTLES	12
DD2	195	1.05%	6	1.7600	STRAW WATTLES	12

TEMPORARY DIVERSION DITCH

(NOT TO SCALE)

NOTES:
INSPECT SEDIMENT FENCES AT LEAST ONCE A WEEK AND AFTER EACH RAINFALL. MAKE ANY REQUIRED REPAIRS IMMEDIATELY.

SHOULD THE FABRIC OF A SEDIMENT FENCE COLLAPSE, TEAR, DECOMPOSE OR BECOME INEFFECTIVE, REPLACE IT PROMPTLY.

REMOVE SEDIMENT DEPOSITS AS NECESSARY TO PROVIDE ADEQUATE STORAGE VOLUME FOR THE NEXT RAIN AND TO REDUCE PRESSURE ON THE FENCE. TAKE CARE TO AVOID UNDERMINING THE FENCE DURING CLEANOUT.

REMOVE ALL FENCING MATERIALS AND UNSTABLE SEDIMENT DEPOSITS AND BRING THE AREA TO GRADE AND STABILIZE IT AFTER THE CONTRIBUTING DRAINAGE AREA HAS BEEN PROPERLY STABILIZED.

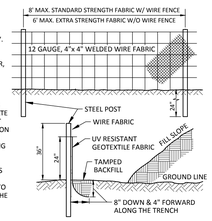

TEMPORARY SILT FENCE

(NOT TO SCALE)

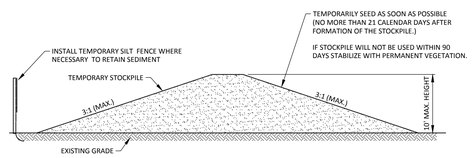

TEMPORARY STOCKPILE

Drawing No. EC-22 (NOT TO SCALE)

Greenville NORTH CAROLINA

JACOBS
333 Fayetteville Street
Suite 1100
Raleigh, NC 27601
www.jacobs.com

AYERS SAINT GROSS

Consultants:
Coaly Design
Landscape Architecture + Land Planning

ARK Consulting Group, PLLC
Engineers & Planners
3280 Charles Blvd. | Suite B
Greenville, NC 27858
(252) 558-0888
NC License: P-1199

Seals:
NORTH CAROLINA PROFESSIONAL SEAL 28425 ENGINEER SCOTT T. ANDERSON
9/10/2016

SCOTT T. ANDERSON, P.E., LICENSE NO. 28425

General Notes:

Project Client:
CITY OF GREENVILLE

GREENVILLE TRANSPORTATION ACTIVITY CENTER
600 S. Pitt Street, Greenville, NC

Number	Description	Date
0	IFC	05-10-2016

Key Plan: Project North

CAD File:
Project No.: L3005900
Copyright: 2015 Jacobs Engineering Group

Drawing Sheet Title:
Details

Drawing Sheet Number:
C-11

Owner's Drawing Sheet No.:
Ark Drawing No. E-1004

NOTES:

1. Construct the walking surface of the detectable domes with slip resistance and a 70% contrasting color to the sidewalk.
2. Crosswalk widths and configuration vary but must conform to traffic design standards.
3. Provide curb ramps at locations as shown on the plans or as directed by the engineer. Locate curb ramps as directed by the engineer where existing light poles, fire hydrants, drop inlets, etc. affect placement. Where two ramps are installed place not less than 2 feet of full height curb between the ramps. Place dual ramps as near perpendicular to the travel lane being crossed as possible.
4. Do not exceed 0.08 ft./ft. (12:1) slope on the curb ramp in relationship to the grade of the street.
5. Construct curb ramps a minimum of 48" wide (4'-0"); Greater for dual ramps.
6. Use class "B" concrete with a sidewalk finish in order to obtain a rough non-skid type surface.
7. Place a 1/2" expansion joint where the concrete curb ramp joins the curb.
8. Place the inside pedestrian crosswalk lines no closer in the intersection then would be established by bisecting the intersection radii, with an allowance of a 4'x4' maneuvering space (2003 ICC/ANSI a117 Commentary. Fig. C406.6 & 406.10) in the vehicular travel way when one ramp is installed.
9. Coordinate the curb cut and the pedestrian crosswalk lines so the floor of the curb ramp will fall within the pedestrian crosswalk lines. Place diagonal ramps with flared sides so 24" of the full height curb falls within the crosswalk markings on each side of the flares.
10. Construct the pedestrian crosswalk a minimum width of 6 feet. A crosswalk width of 10 feet or greater is required for all thoroughfares.
11. Use stop lines, normally perpendicular to the lane lines, where it is important to indicate the point behind which vehicles are required to stop in compliance with a traffic signal, stop sign or other legal requirement. An unusual approach skew may require the placement of the stop line to be parallel to the intersecting roadway.
12. Place all pavement markings in accordance with the latest edition of the Manual of Uniform Traffic Control Devices (MUTCD) published by the Federal Highway Administration and the North Carolina Supplement to the MUTCD.
13. Other detectable warning materials may be considered from that shown, but require City Engineer's written approval prior to installation.

PUBLIC WORKS DEPARTMENT
1500 Beatty Street
Greenville, North Carolina 27834

CITY OF GREENVILLE, N.C.
USE WITH THE CITY OF GREENVILLE, N.C. STANDARD SPECIFICATIONS ONLY
www.greenvillenc.gov

No.	Date	Description
1	9/16/11	APPROVAL

STANDARD CROSSWALK & CURB RAMP NOTES

Scale: not to scale | Sheet # 1 of 2 | Detail # 413.01

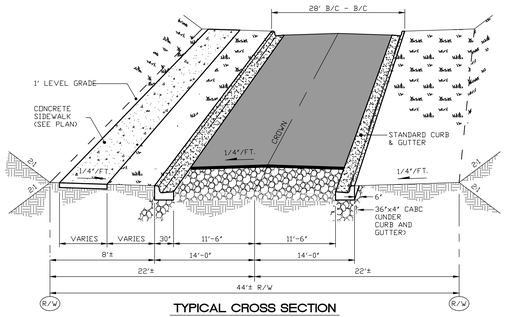

TYPICAL CROSS SECTION
(CURB & GUTTER)

NOTES:

1. Pavement Section Shall be 8" CABC, 3.5" Asphalt Binder Course (NCDOT Type I-19.0B), and 2" Asphalt Surface Course (NCDOT Type S-9.5B)
2. Roadway shall be constructed in accordance with NCDOT standard specifications.

PUBLIC WORKS DEPARTMENT
1500 Beatty Street
Greenville, North Carolina 27834

CITY OF GREENVILLE, N.C.
USE WITH THE CITY OF GREENVILLE, N.C. STANDARD SPECIFICATIONS ONLY
www.greenvillenc.gov

No.	Date	Description
1	9/16/11	APPROVAL

TYPICAL STREET SECTION (CURB & GUTTER)

Scale: not to scale | Sheet # 1 of 2 | Detail # 410.04

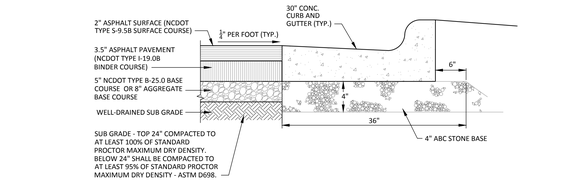

PAVEMENT SECTION DETAIL - TURN LANE
N.T.S.

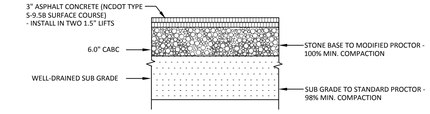

LIGHT DUTY PAVEMENT SECTION
(NOT TO SCALE)

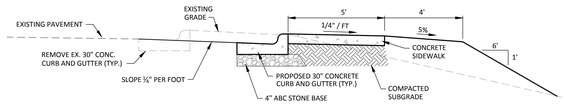

PAVEMENT SECTION DETAIL - TURN LANE
N.T.S.

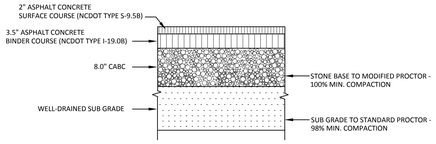

HEAVY DUTY ASPHALT PAVEMENT SECTION
(NOT TO SCALE)

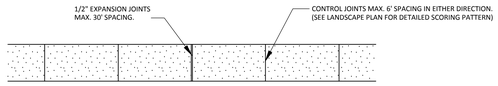

PLAN

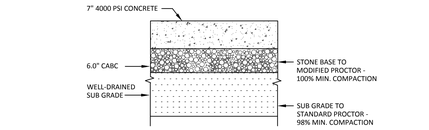

CONCRETE PAVEMENT SECTION
(NOT TO SCALE)

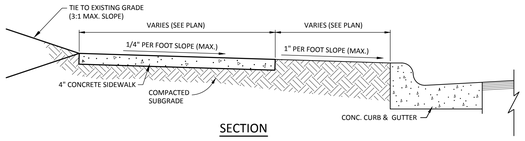

SECTION

SIDEWALK DETAIL
NTS

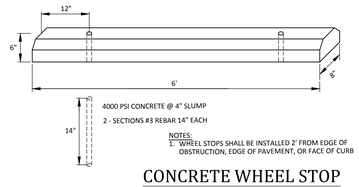

NOTES:
1. WHEEL STOPS SHALL BE INSTALLED 2' FROM EDGE OF OBSTRUCTION, EDGE OF PAVEMENT, OR FACE OF CURB

CONCRETE WHEEL STOP
(NOT TO SCALE)

NOTES:

14. For all roads with radius 25' or less. Only one curb ramp is required. Curb ramps to be placed as per traffic design standards to ensure pedestrians enter & exit without entering travel lanes.
15. Terminate parking a minimum of 20 feet back of pedestrian walk.
16. A 4'x4' maneuvering space is required at the bottom of the curb ramp and must be within the crosswalk.
17. Drop curb width (4'-0" min.) x 4' long landing required at top of curb ramp
18. North Carolina General Statute 136-44.14 requires that all street curbs being constructed or reconstructed for maintenance procedures, traffic operations, repairs, correction of utilities or altered for any reason after September 1, 1973 shall provide curb ramps for the physically disabled at all intersections where both curb and gutter and sidewalks are provided and at other points of pedestrian flow.
In addition, section 228 of the 1973 Federal Aid Highway Safety Act requires provision of curb ramps on any curb construction after July 1, 1976 whether a sidewalk is proposed initially or is planned for a future date.
The Americans with Disability Act (ADA) of 1990 extends to individuals with disabilities. Comprehensive civil rights protections similar to those provided to persons on the basis of race, sex, national origin and religion under the Civil Rights Act of 1964. These curb ramps have been designed to comply with the current ADA standards.
19. Construct all ramp surfaces to comply with sections R301 and R303.3.3 of the revised ADA guidelines.
20. Construct all ramps and sidewalks with a 2% cross slope.

PUBLIC WORKS DEPARTMENT
1500 Beatty Street
Greenville, North Carolina 27834

CITY OF GREENVILLE, N.C.
USE WITH THE CITY OF GREENVILLE, N.C. STANDARD SPECIFICATIONS ONLY
www.greenvillenc.gov

No.	Date	Description
1	9/16/11	APPROVAL

STANDARD CROSSWALK & CURB RAMP NOTES

Scale: not to scale | Sheet # 2 of 2 | Detail # 413.01

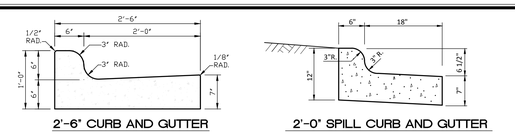

2'-6" CURB AND GUTTER

2'-0" SPILL CURB AND GUTTER

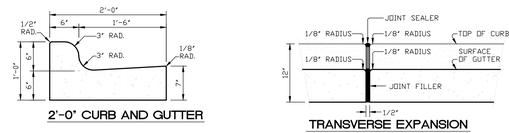

2'-0" CURB AND GUTTER

TRANSVERSE EXPANSION JOINT IN CURB AND GUTTER

NOTES:

1. Contraction joints shall be placed at 10' intervals, except that 15' spacing may be used when a machine is used or when satisfactory support for the face form can be obtained without the use of templates at 10' intervals. Joint spacing may be altered by the engineer to prevent uncontrolled cracking.
2. Contraction joints may be installed by the use of templates or formed by other approved methods. Where such joints are not formed by templates, a minimum depth of 1 1/2" shall be obtained.
3. All contraction joints shall be filled with joint filler.
4. Expansion joints shall be spaced at 90' intervals, and adjacent to all rigid objects.
5. All curb and gutters are to be poured with class "A" concrete (3,000 PSI).
6. Flexible forms are to be used when radius is less than 200'.

PUBLIC WORKS DEPARTMENT
1500 Beatty Street
Greenville, North Carolina 27834

CITY OF GREENVILLE, N.C.
USE WITH THE CITY OF GREENVILLE, N.C. STANDARD SPECIFICATIONS ONLY
www.greenvillenc.gov

No.	Date	Description
1	9/16/11	APPROVAL

STANDARD CURB & GUTTER

Scale: not to scale | Sheet # 1 of 1 | Detail # 411.01

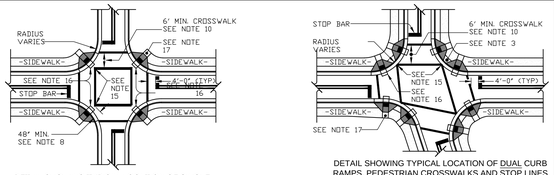

DETAIL SHOWING TYPICAL LOCATION OF SINGLE CURB RAMPS, PEDESTRIAN CROSSWALKS AND STOP LINES FOR TEE INTERSECTIONS

FOR CROSSING INTERSECTIONS

DETAIL SHOWING TYPICAL LOCATION OF DUAL CURB RAMPS, PEDESTRIAN CROSSWALKS AND STOP LINES FOR TEE INTERSECTIONS

FOR CROSSING INTERSECTIONS

PROPOSED CURB RAMP

SIDEWALK — PROPOSED OR FUTURE SIDEWALK

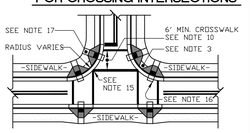

DETAIL SHOWING TYPICAL LOCATION OF CURB RAMPS, PEDESTRIAN CROSSWALKS AND STOP LINES FOR TEE INTERSECTIONS

FOR TEE INTERSECTIONS

PUBLIC WORKS DEPARTMENT
1500 Beatty Street
Greenville, North Carolina 27834

CITY OF GREENVILLE, N.C.
USE WITH THE CITY OF GREENVILLE, N.C. STANDARD SPECIFICATIONS ONLY
www.greenvillenc.gov

No.	Date	Description
1	9/16/11	APPROVAL

STANDARD DETAIL CURB RAMP PLACEMENT

Scale: not to scale | Sheet # 1 of 1 | Detail # 413.02

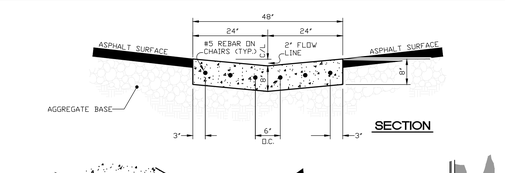

SECTION

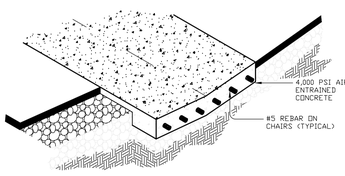

ISOMETRIC

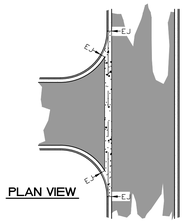

PLAN VIEW

PUBLIC WORKS DEPARTMENT
1500 Beatty Street
Greenville, North Carolina 27834

CITY OF GREENVILLE, N.C.
USE WITH THE CITY OF GREENVILLE, N.C. STANDARD SPECIFICATIONS ONLY
www.greenvillenc.gov

No.	Date	Description
1	9/16/11	APPROVAL

CONCRETE VALLEY GUTTER

Scale: not to scale | Sheet # 1 of 1 | Detail # 411.05

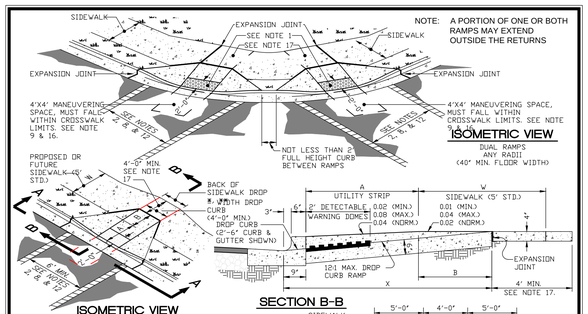

ISOMETRIC VIEW

NOTE: A PORTION OF ONE OR BOTH RAMPS MAY EXTEND OUTSIDE THE RETURNS

DUAL RAMPS
ANY RADII
(40' MIN. FLOOR WIDTH)

SECTION B-B

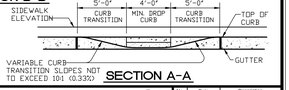

SECTION A-A

SEE SHEET 2 OF 2 FOR DETECTABLE WARNING DOMES, DIMENSIONAL CHART AND NOTES

PUBLIC WORKS DEPARTMENT
1500 Beatty Street
Greenville, North Carolina 27834

CITY OF GREENVILLE, N.C.
USE WITH THE CITY OF GREENVILLE, N.C. STANDARD SPECIFICATIONS ONLY
www.greenvillenc.gov

No.	Date	Description
1	9/16/11	APPROVAL

STANDARD DETAIL CURB RAMP

Scale: not to scale | Sheet # 2 of 2 | Detail # 413.03

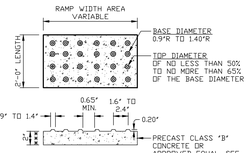

DETECTABLE WARNING DOMES

W	A	W + A * 9"	X	B
5'	0.0'	5.8'	5.8'	5.0' *
6'	0.0'	6.8'	6.8'	6.0' **
7'	0.0'	7.8'	7.3'	6.5' **
8'	0.0'	8.8'	7.3'	6.5' **
5'	1.5'	7.3'	7.5'	5.2'
5'	2.0'	7.8'	7.8'	5.0'
5'	2.5'	8.3'	8.1'	4.8'
5'	3.0'	8.8'	8.3'	4.4'
5'	3.5'	9.3'	8.3'	4.1'
5'	4.0'	9.8'	8.6'	3.8'
5'	4.5'	10.3'	8.7'	3.4'
5'	5.0'	10.8'	8.9'	3.1'

B = X-(A+9")
B = DISTANCE FROM FRONT EDGE OF SIDEWALK TO BACK POINT OF 12:1 (8.33%) SLOPE.
* BACK OF SIDEWALK DROP REQUIRED FOR ALL SIDEWALK SLOPES.
** BACK OF SIDEWALK DROP REQUIRED FOR SIDEWALK SLOPES 0.04.
*** THICKNESS MAY VARY FOR APPROVED EQUAL PRECAST MATERIAL

ROADWAY PLAN SYMBOL: CCFR — CURB CUT FOR FUTURE RAMP

ROADWAY PLAN SYMBOL: WCR — FOR PROPOSED CURB RAMP

NOTES:

1. Detectable warning domes shall cover 2'-0" length and full width of the ramp floor as shown on the details.
2. The entire ramp shall be Black in color or any color with a 70% contrast ratio and approved by City Engineer.

PUBLIC WORKS DEPARTMENT
1500 Beatty Street
Greenville, North Carolina 27834

CITY OF GREENVILLE, N.C.
USE WITH THE CITY OF GREENVILLE, N.C. STANDARD SPECIFICATIONS ONLY
www.greenvillenc.gov

No.	Date	Description
1	9/16/11	APPROVAL

STANDARD CURB RAMP

Scale: not to scale | Sheet # 2 of 2 | Detail # 413.03

STATE OF NORTH CAROLINA DEPARTMENT OF TRANSPORTATION DIVISION OF HIGHWAYS RALEIGH, N.C.

HI-VISIBILITY CROSSWALK

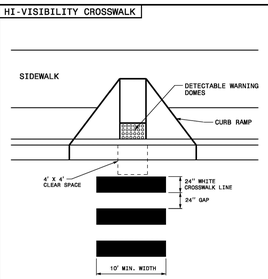

STANDARD CROSSWALK

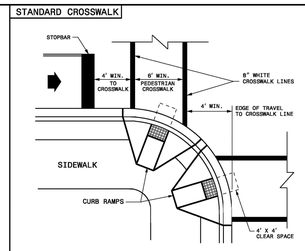

1- THE MINIMUM WIDTH OF STANDARD CROSSWALKS IS 6 FEET. THE MINIMUM WIDTH OF HI-VISIBILITY CROSSWALKS IS 10 FEET.
2- SET BACK DISTANCE FROM INSIDE CROSSWALK MARKING TO NEAREST EDGE OF TRAVEL IS 4' MIN.
3- BEYOND THE CURB FACE, A CLEAR SPACE OF 4' X 4' FEET MINIMUM SHALL BE PROVIDED WITHIN THE WIDTH OF THE CROSSWALK.
4- PLACE STOP BARS A MINIMUM OF 4 FEET FROM NEAREST CROSSWALK LINE. STOP BARS AT SIGNALIZED INTERSECTIONS SHOULD BE COORDINATED WITH THE SIGNAL DESIGN SECTION OR AS DIRECTED BY THE ENGINEER.
5- CURB RAMPS SHALL BE CONSTRUCTED IN ACCORDANCE TO THE LATEST NCDOT ROADWAY STANDARD DRAWINGS.

LEGEND
- DIRECTION OF TRAFFIC FLOW
- CURB RAMP WITH DETECTABLE WARNING DOMES

ENGLISH STANDARD DRAWING FOR PAVEMENT MARKINGS PEDESTRIAN CROSSWALKS

STATE OF NORTH CAROLINA DEPARTMENT OF TRANSPORTATION DIVISION OF HIGHWAYS RALEIGH, N.C.

ENGLISH STANDARD DRAWING FOR PAVEMENT MARKINGS PEDESTRIAN CROSSWALKS

L-12

SHEET 1 OF 1 | 1205.07 | SHEET 1 OF 1 | 1205.07

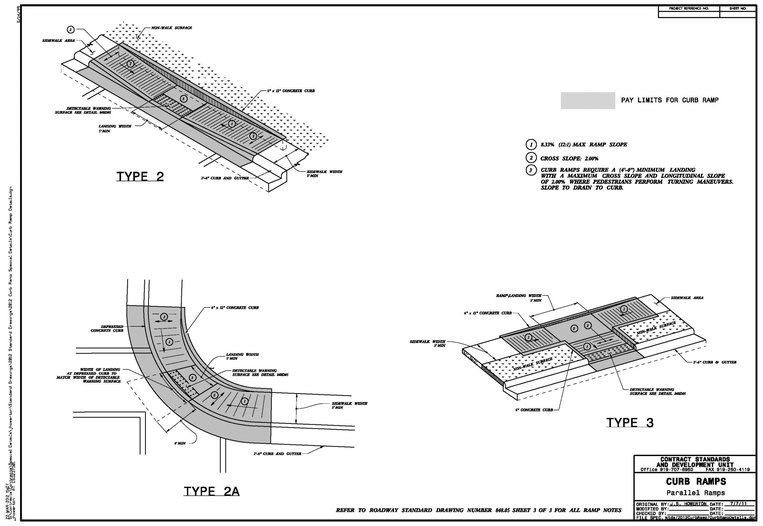

RAPID FLASHING BEACON
(CARMANAH R920 OR APPROVED EQUAL)
(NOT TO SCALE)

Greenville NORTH CAROLINA

JACOBS
333 Fayetteville Street
Suite 1100
Raleigh, NC 27601
www.jacobs.com

AYERS SAINT GROSS

Consultants:

Coaly Design
Landscape Architecture + Land Planning

ARK Consulting Group, PLLC
Engineers & Planners
3280 Charles Blvd. | Suite B
Greenville, NC 27858
(252) 558-0888
NC License: P-1199

Seals:

NORTH CAROLINA PROFESSIONAL SEAL 28425 ENGINEER SCOTT T. ANDERSON
9/10/2016

SCOTT T. ANDERSON, P.E., LICENSE NO. 28425

General Notes:

Project Client:
CITY OF GREENVILLE

GREENVILLE TRANSPORTATION ACTIVITY CENTER
600 S. Pitt Street, Greenville, NC

Number	Description	Date
0	IFC	05-10-2016

Key Plan:

Project North

CAD File:
Project No.: L3005900
Copyright: 2015 Jacobs Engineering Group

Drawing Sheet Title:
Details

Drawing Sheet Number:
C-12

Owner's Drawing Sheet No.:
Ark Drawing No. E-1004

CATCH BASIN & JUNCTION BOX STANDARD NOTES

1. Mortar Joints 1/2" ± 1/8" thick. Concave tool all exposed mortar joints.
2. Class "A" concrete to be used. Chamfer all exposed corners 1".
3. The pouring of floor slab to be accomplished by forming.
4. All catch basins over 3'-6" in depth shall be provided with steps 1' on centers. Steps shall be in accordance with std. detail No. 615.01.
5. Concrete brick may be used in lieu of clay brick. Jumbo brick will be permitted.
6. Engineered pre-cast boxes are permitted with the City Engineer's approval.
7. For 8'-0" in height or less use 8" wall. Over 8'-0" in height use 12" wall to 6'-0" from top of wall, and 8" wall for the remaining 6'-0". Adjust quantities accordingly.
8. Leave weep holes as directed by the engineer.
9. Construct with pipe crowns matching.
10. All drawings not to scale.

MANHOLE STANDARD NOTES

1. Mortar Joints 1/2" ± 1/8" thick. Concave tool all exposed mortar joints.
2. Class "A" concrete to be used. Chamfer all exposed corners 1".
3. Forms to be used for the construction of the base.
4. Where the manhole top is exposed to road traffic, the top of the manhole is to be flush with the ground. At other locations it should be a minimum of 9" above the ground.
4. Manholes over 3'-6" in depth shall be provided with steps 1' on centers. Steps shall be in accordance with Std. detail No. 615.01.
5. Over 36" pipe design requires City Engineer's approval.
6. For manholes over 12 ft. vertical wall depth, brick masonry wall thickness shall be 12"
7. For manholes with a vertical wall depth less than 12 ft., brick masonry wall thickness shall be 8".
8. All drawings not to scale.

PUBLIC WORKS DEPARTMENT
1500 Beatty Street
Greenville, North Carolina 27834

CITY OF GREENVILLE, N.C.
USE WITH THE CITY OF GREENVILLE, N.C. STANDARD SPECIFICATIONS ONLY
www.greenvillenc.gov

No.	Date	Description
1	9/16/11	APPROVAL

STANDARD CATCH BASIN AND MANHOLE NOTES

Scale: not to scale | Sheet # 1 of 1 | Detail # 610.01

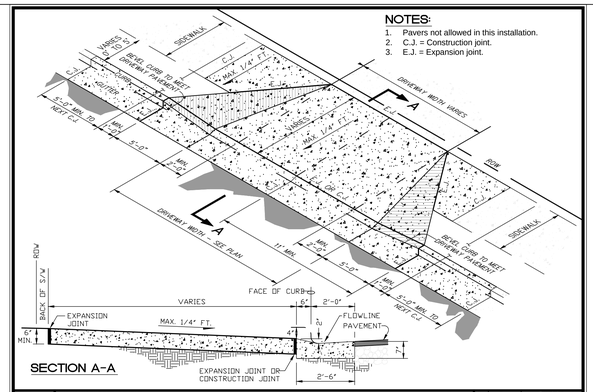

SECTION A-A

NOTES:
1. Pavers not allowed in this installation.
2. C.J. = Construction joint.
3. E.J. = Expansion joint.

PUBLIC WORKS DEPARTMENT
1500 Beatty Street
Greenville, North Carolina 27834

CITY OF GREENVILLE, N.C.
USE WITH THE CITY OF GREENVILLE, N.C. STANDARD SPECIFICATIONS ONLY
www.greenvillenc.gov

No.	Date	Description

DRIVEWAY - SIDEWALK WITHIN 5' OF CURB

Scale: not to scale | Sheet # of | Detail #

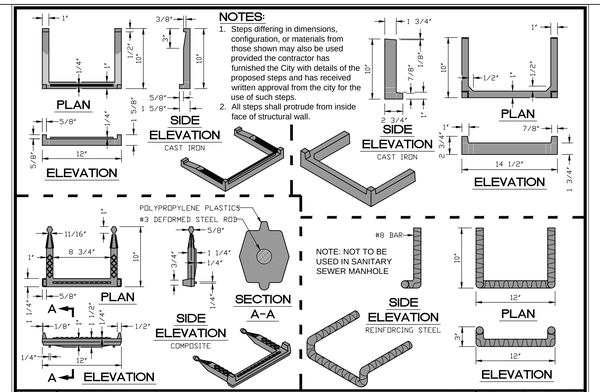

NOTES:
1. Steps differing in dimensions, configuration, or materials from those shown may also be used provided the contractor has furnished the City with details of the proposed steps and has received written approval from the city for the use of such steps.
2. All steps shall protrude from inside face of structural wall.

PUBLIC WORKS DEPARTMENT
1500 Beatty Street
Greenville, North Carolina 27834

CITY OF GREENVILLE, N.C.
USE WITH THE CITY OF GREENVILLE, N.C. STANDARD SPECIFICATIONS ONLY
www.greenvillenc.gov

No.	Date	Description
1	9/16/11	APPROVAL

STANDARD STEPS

Scale: not to scale | Sheet # 1 of 1 | Detail # 615.01

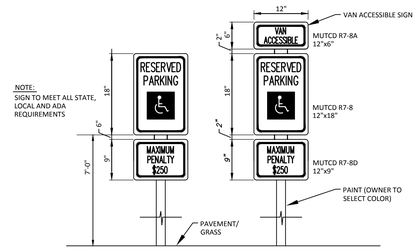

NOTE:
SIGN TO MEET ALL STATE, LOCAL AND ADA REQUIREMENTS

NOTES:
1. MOUNT POST IN SIDEWALK. PROVIDE PROTECTION FOR POST.
2. PAINT STEEL/METAL POST TO MATCH BUILDING.

ACCESSIBLE PARKING SIGN

(NOT TO SCALE)

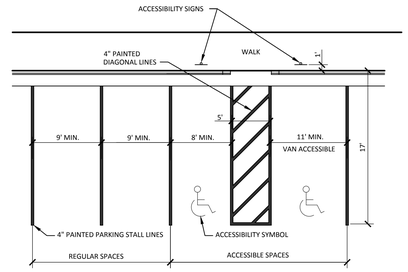

NOTE:
ACCESSIBLE SPACE FOR VANS MUST BE 11' WIDE WITH 5' ACCESS AISLES AND BE DESIGNATED FOR VANS

PARKING STALL LAYOUT

(NOT TO SCALE)

Greenville NORTH CAROLINA

JACOBS
333 Fayetteville Street
Suite 1100
Raleigh, NC 27601
www.jacobs.com

AYERS SAINT GROSS

Consultants:

Coaly Design
Landscape Architecture + Land Planning

ARK Consulting Group, PLLC
Engineers & Planners
3280 Charles Blvd. | Suite B
Greenville, NC 27858
(252) 558-0888
NC License: P-1199

Seals:

NORTH CAROLINA PROFESSIONAL SEAL 28425 ENGINEER SCOTT T. ANDERSON
9/10/2016

SCOTT T. ANDERSON, P.E., LICENSE NO. 28425

General Notes:

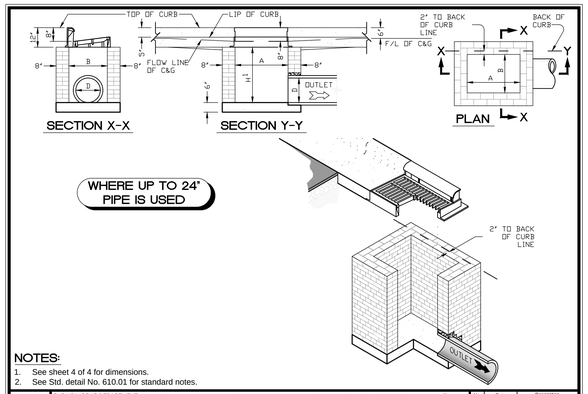

NOTES:
1. See sheet 4 of 4 for dimensions.
2. See Std. detail No. 610.01 for standard notes.

PUBLIC WORKS DEPARTMENT
1500 Beatty Street
Greenville, North Carolina 27834

CITY OF GREENVILLE, N.C.
USE WITH THE CITY OF GREENVILLE, N.C. STANDARD SPECIFICATIONS ONLY
www.greenvillenc.gov

No.	Date	Description
1	9/16/11	APPROVAL

STANDARD BRICK CATCH BASIN (15" THRU 54" PIPE)

Scale: not to scale | Sheet # 1 of 4 | Detail # 610.02

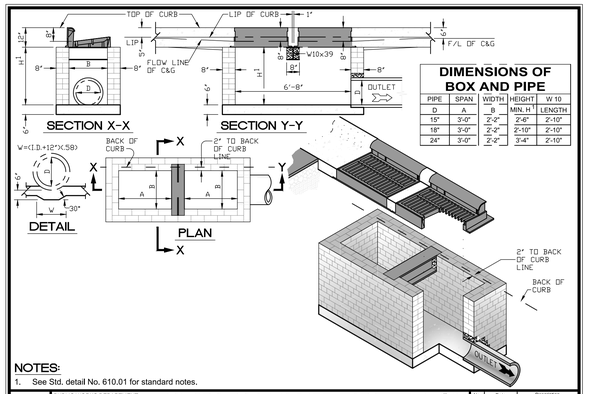

DIMENSIONS OF BOX AND PIPE				
PIPE	SPAN	WIDTH	HEIGHT	W 10
D	A	B	MIN. H'	LENGTH
15"	3'-0"	2'-2"	2'-6"	2'-10"
18"	3'-0"	2'-2"	2'-10"	2'-10"
24"	3'-0"	2'-2"	3'-4"	2'-10"

NOTES:
1. See Std. detail No. 610.01 for standard notes.

PUBLIC WORKS DEPARTMENT
1500 Beatty Street
Greenville, North Carolina 27834

CITY OF GREENVILLE, N.C.
USE WITH THE CITY OF GREENVILLE, N.C. STANDARD SPECIFICATIONS ONLY
www.greenvillenc.gov

No.	Date	Description
1	9/16/11	APPROVAL

STANDARD BRICK DOUBLE CATCH BASIN (15" THRU 24" PIPE)

Scale: not to scale | Sheet # 1 of 3 | Detail # 610.03

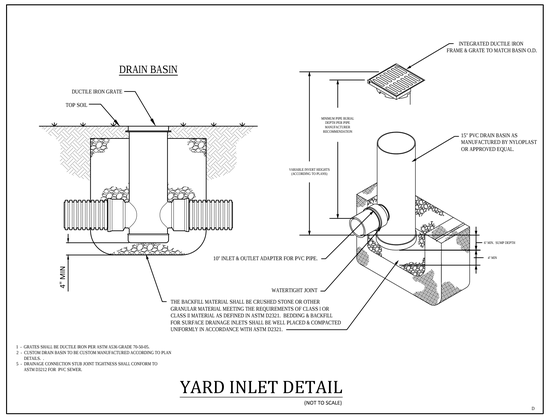

YARD INLET DETAIL

(NOT TO SCALE)

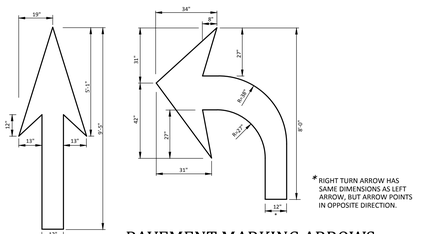

PAVEMENT MARKING ARROWS

NOT TO SCALE

DIMENSIONS AND QUANTITIES FOR BRICK CATCH BASIN

DIMENSIONS OF BOX & PIPE							COVER DIMENSIONS		REINFORCEMENT							CUBIC YARDS OF CONCRETE IN BOX			BRICK MASONRY	
PIPE	SPAN	WIDTH	WIDTH	SPAN	HEIGHT	HEIGHT			BARS-U		BARS-V		BARS-W		TOTAL				H^3	
D	A	B	C	G	MIN. H^2	MIN. H^2	E	F	Qty.	LGTH.	Qty.	LGTH.	Qty.	LGTH.	LBS.	TOP SLAB	FLOOR	TOTAL	CU. YDS.	PER FT. OF HEIGHT
15"	3'-0"	2'-2"	-	-	2'-6"	-	-	-	-	-	-	-	-	-	-	-	0.281	0.281	0.802	0.321 ABOVE MIN. H^3
18"	3'-0"	2'-2"	-	-	2'-10"	-	-	-	-	-	-	-	-	-	-	-	0.281	0.281	0.909	
24"	3'-0"	2'-2"	-	-	3'-4"	-	-	-	-	-	-	-	-	-	-	-	0.281	0.281	1.070	
30"	3'-0"	2'-2"	3'-4"	-	3'-2"	-	1'-10"	4'-4"	4	1'-6"	3	4'-1"	3	4'-1"	45	0.147	0.374	0.521	1.306	
36"	3'-0"	2'-2"	3'-10"	-	3'-8"	-	2'-4"	4'-4"	4	2'-0"	4	4'-1"	3	4'-1"	49	0.187	0.415	0.602	1.586	0.321 ABOVE MIN. H^3
42"	3'-0"	2'-2"	-	4'-5"	4'-4"		2'-1"	3'-6"	4	1'-9"	3	3'-3"	3	3'-3"	38	0.135	0.373	0.508	1.811	
48"	3'-0"	2'-2"	-	5'-0"	4'-10"		2'-8"	3'-6"	4	2'-6"	4	3'-3"	3	3'-3"	40	0.173	0.410	0.583	2.146	
54"	3'-0"	2'-2"	-	5'-7"	5'-4"		3'-3"	3'-6"	4	3'-0"	6	3'-3"	3	3'-3"	48	0.211	0.448	0.659	2.510	

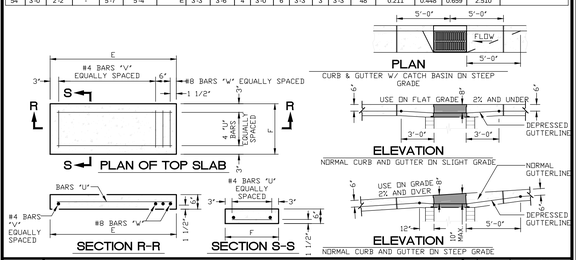

PUBLIC WORKS DEPARTMENT
1500 Beatty Street
Greenville, North Carolina 27834

CITY OF GREENVILLE, N.C.
USE WITH THE CITY OF GREENVILLE, N.C. STANDARD SPECIFICATIONS ONLY
www.greenvillenc.gov

No.	Date	Description
1	9/16/11	APPROVAL

STANDARD BRICK CATCH BASIN (15" THRU 54" PIPE)

Scale: not to scale | Sheet # 4 of 4 | Detail # 610.02

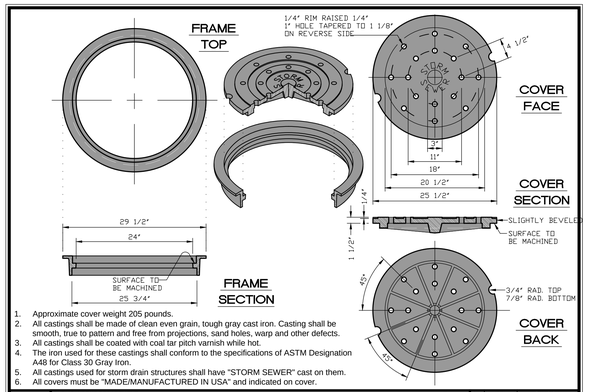

1. Approximate cover weight 205 pounds.
2. All castings shall be made of clean even grain, tough gray cast iron. Casting shall be smooth, true to pattern and free from projections, sand holes, warp and other defects.
3. All castings shall be coated with coal tar pitch varnish while hot.
4. The iron used for these castings shall conform to the specifications of ASTM Designation A48 for Class 30 Gray Iron.
5. All castings used for storm drain structures shall have "STORM SEWER" cast on them.
6. All covers must be "MADE/MANUFACTURED IN USA" and indicated on cover.

PUBLIC WORKS DEPARTMENT
1500 Beatty Street
Greenville, North Carolina 27834

CITY OF GREENVILLE, N.C.
USE WITH THE CITY OF GREENVILLE, N.C. STANDARD SPECIFICATIONS ONLY
www.greenvillenc.gov

No.	Date	Description
1	9/16/11	APPROVAL

STANDARD MANHOLE FRAME & COVER

Scale: not to scale | Sheet # 1 of 1 | Detail # 614.04

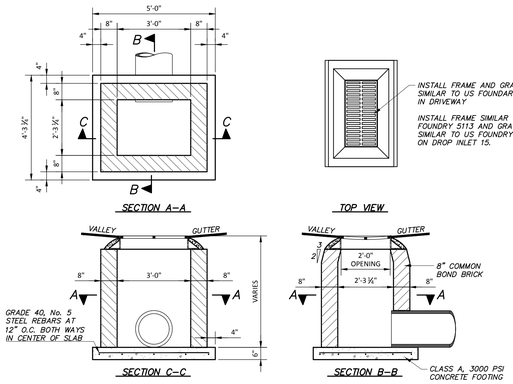

DROP INLET IN VALLEY GUTTER

(NOT TO SCALE)

GENERAL

FORMS TO BE USED FOR CONSTRUCTION OF BOTTOM SLABS. ALL MORTAR JOINTS TO BE 1/2" PLUS OR MINUS 1/8". JUMBO BRICK WILL BE PERMITTED. JUNCTION BOXES SHALL BE PROVIDED WITH STEPS 1'-2" ON CENTER.

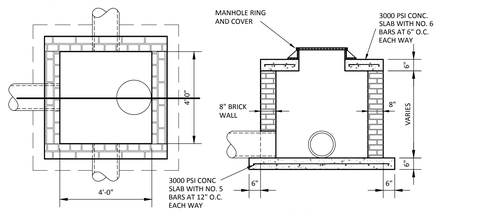

JUNCTION BOX DETAIL

(NOT TO SCALE)

Project Client:
CITY OF GREENVILLE

GREENVILLE TRANSPORTATION ACTIVITY CENTER
600 S. Pitt Street, Greenville, NC

Number	Description	Date
0	IFC	05-10-2016

Key Plan:

Project North

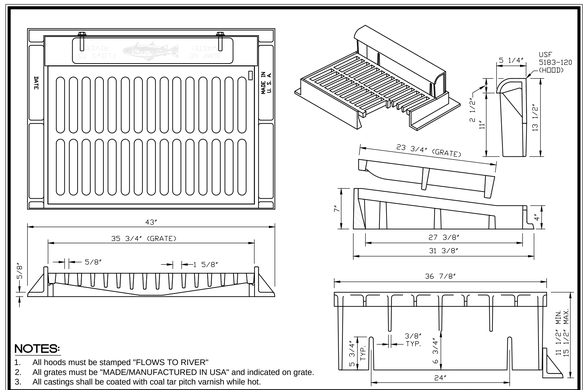

NOTES:
1. All hoods must be stamped "FLOWS TO RIVER"
2. All grates must be "MADE/MANUFACTURED IN USA" and indicated on grate.
3. All castings shall be coated with coal tar pitch varnish while hot.

PUBLIC WORKS DEPARTMENT
1500 Beatty Street
Greenville, North Carolina 27834

CITY OF GREENVILLE, N.C.
USE WITH THE CITY OF GREENVILLE, N.C. STANDARD SPECIFICATIONS ONLY
www.greenvillenc.gov

No.	Date	Description
1	9/16/11	APPROVAL

STANDARD CATCH BASIN ASSEMBLY FRAME, HOOD & GRATE

Scale: not to scale | Sheet # 1 of 1 | Detail # 614.01

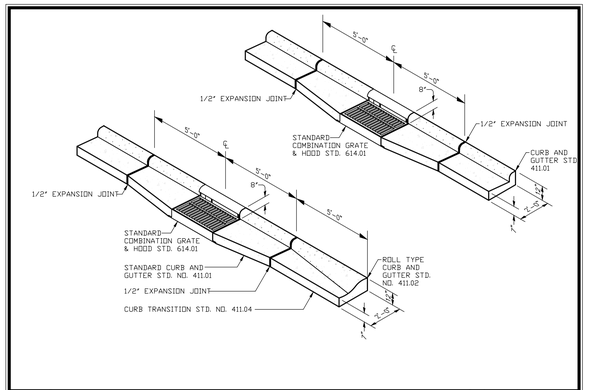

PUBLIC WORKS DEPARTMENT
1500 Beatty Street
Greenville, North Carolina 27834

CITY OF GREENVILLE, N.C.
USE WITH THE CITY OF GREENVILLE, N.C. STANDARD SPECIFICATIONS ONLY
www.greenvillenc.gov

No.	Date	Description
1	9/16/11	APPROVAL

STANDARD CATCH BASIN FRAME 2'-0" IN CURB AND GUTTER

Scale: not to scale | Sheet # 1 of 1 | Detail # 411.03

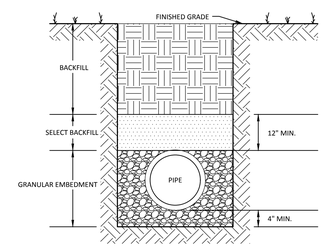

CLASS "D"

TRENCH SECTION DETAIL FOR THE INSTALLATION OF PVC GRAVITY STORM DRAIN & SANITARY SEWER PIPING

(NOT TO SCALE)

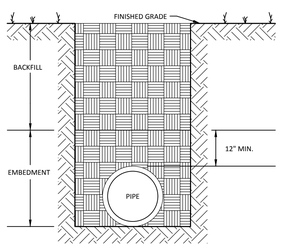

CLASS "F"

TRENCH SECTION DETAIL FOR THE INSTALLATION OF REINFORCED CONCRETE PIPE

(NOT TO SCALE)

CAD File:	
Project No.:	L3005900
Copyright:	2015 Jacobs Engineering Group

Drawing Sheet Title:
Details

Drawing Sheet Number:
C-13

Owner's Drawing Sheet No.:
Ark Drawing No. E-1004

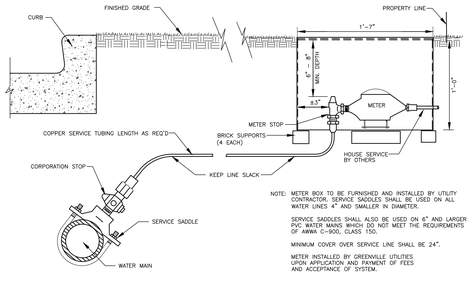

NOTE: METER BOX TO BE FURNISHED AND INSTALLED BY UTILITY CONTRACTOR. SERVICE SADDLES SHALL BE USED ON ALL WATER LINES 4" AND SMALLER IN DIAMETER.

SERVICE SADDLES SHALL ALSO BE USED ON 6" AND LARGER PVC WATER MAINS WHICH DO NOT MEET THE REQUIREMENTS OF AWWA C-900, CLASS 150.

MINIMUM COVER OVER SERVICE LINE SHALL BE 24".

METER INSTALLED BY GREENVILLE UTILITIES UPON APPLICATION AND PAYMENT OF FEES AND ACCEPTANCE OF SYSTEM.

1" WATER SERVICE FOR AREAS WITH CURB AND GUTTER
(W-1) NOT TO SCALE

RESULTANT THRUST AT FITTING AT 150 PSI WATER PRESSURE

NOM PIPE DIA.	TOTAL POUNDS				
	DEAD END	90° BEND	45° BEND	22-1/2° BEND	11-1/4° BEND
4"	2,700	3,800	2,100	1,100	530
6"	5,600	8,000	4,300	2,200	1,100
8"	9,700	13,600	7,400	3,800	1,900
10"	14,500	20,500	11,100	5,700	2,900
12"	20,500	29,000	15,700	8,000	4,000
14"	27,600	39,000	21,100	11,000	5,400
16"	35,700	50,400	27,300	14,000	7,000
18"	44,800	63,400	34,400	17,500	8,800
20"	55,000	77,000	42,100	21,500	10,800
24"	78,500	110,000	60,000	31,600	15,400
30"	120,600	170,600	92,300	47,100	23,600
36"	172,800	244,400	132,300	67,500	33,900
42"	233,300	330,000	178,600	91,000	45,700
48"	304,000	430,000	232,700	118,600	59,600
54"	384,100	543,200	294,000	149,000	75,300

TYPES OF THRUST BLOCKING

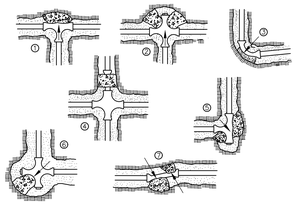

SOIL	BEARING LOAD (LB./SQ. FT.)
MUCK	0
SOFT CLAY	1,000
SILT	1,500
SANDY SILT	3,000
SAND	4,000
SANDY CLAY	6,000
HARD CLAY	9,000

POLYWRAP SHALL BE USED TO COVER FITTINGS AND BOLTS.

TO DETERMINE THE SIZE OF A CONCRETE THRUST BLOCK, DIVIDE THE TOTAL FORCE BY THE BEARING VALUES FOR THE SOIL TYPE. THE BOTTOM AREA WILL BE THE SIZE OF THE BEARING AREA OF THE THRUST BLOCK IN SQUARE FEET. APPROXIMATE VALUES FOR VARIOUS TYPES OF SOIL ARE LISTED IN TABLE.

NO RESPONSIBILITY CAN BE ASSUMED FOR THE ACCURACY OF THE DATA IN THIS TABLE DUE TO THE WIDE VARIATION OF BEARING LOAD CAPABILITIES FOR EACH SOIL TYPE.

1. THRU LINE CONNECTION, TEE
2. THRU LINE CONNECTION, TEE CROSS USED AS TEE
3. DIRECTION CHANGE, ELBOW
4. DIRECTION CHANGE, ELBOW REDUCER
5. DIRECTION CHANGE, TEE USED AS ELBOW
6. DIRECTION CHANGE, CROSS USED AS ELBOW
7. DIRECTION CHANGE

THRUST BLOCKING DETAIL
(W-12) NOT TO SCALE

NOTE:
ALL PIPING AND FITTINGS SHALL BE SCH. 40
PVC-DWV SEWER SERVICE PIPE (ASTM D-2665, D-1785)

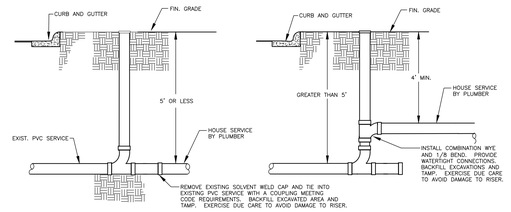

CONNECTION TO SEWER SERVICE 5' OR LESS IN DEPTH

CONNECTION TO SEWER SERVICE GREATER THAN 5' IN DEPTH

PVC SEWER SERVICE CONNECTION
(S-18) NOT TO SCALE

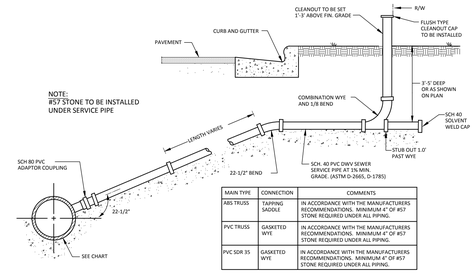

NOTE:
#57 STONE TO BE INSTALLED UNDER SERVICE PIPE

MAIN TYPE	CONNECTION	COMMENTS
ABS TRUSS	TAPPING SADDLE	IN ACCORDANCE WITH THE MANUFACTURERS RECOMMENDATIONS. MINIMUM 4" OF #57 STONE REQUIRED UNDER ALL PIPING.
PVC TRUSS	GASKETED WYE	IN ACCORDANCE WITH THE MANUFACTURERS RECOMMENDATIONS. MINIMUM 4" OF #57 STONE REQUIRED UNDER ALL PIPING.
PVC SDR 35	GASKETED WYE	IN ACCORDANCE WITH THE MANUFACTURERS RECOMMENDATIONS. MINIMUM 4" OF #57 STONE REQUIRED UNDER ALL PIPING.

PVC SANITARY SEWER SERVICE DETAIL FOR AREA WITH CURB AND GUTTER FOR MAINS WITH A MAXIMUM DEPTH OF 12'
(S-1) NOT TO SCALE

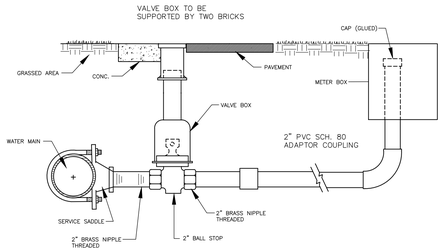

TYPICAL 1-1/2" AND 2" WATER SERVICE CONNECTION
(W-3) NOT TO SCALE

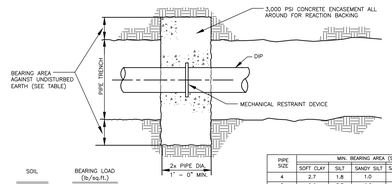

SOIL	BEARING LOAD (lb./sq.ft.)
MUCK	0
SOFT CLAY	1,000
SILT	1,500
SANDY SILT	3,000
SAND	4,000
SANDY CLAY	6,000
HARD CLAY	9,000

NOTE: MIN. BEARING AREAS ARE BASED UPON THE TABLE ABOVE. FOR SOILS HAVING BEARING CAPACITIES DIFFERENT THAN THAT SHOWN ADJUST AREA AS NECESSARY TO PROVIDE EQUIVALENT RESTRAINT.

PIPE SIZE	MIN. BEARING AREA (SQ. FT.)					
	SOFT CLAY	SILT	SANDY SILT	SAND	SAND CLAY	HARD CLAY
4	2.7	1.8	1.0	1.0	1.0	1.0
6	5.6	3.7	1.9	1.4	1.0	1.0
8	9.7	6.4	3.2	2.4	1.6	1.1
10	15	10	4.8	3.6	2.4	1.6
12	21	14	6.8	5.1	3.4	2.3
14	28	18	9.2	6.9	4.6	3.1
16	36	24	12	8.9	5.9	4.0
18	45	30	15	11	7.4	5.0
20	55	37	18	14	9.2	6.1
24	78	52	26	20	13	8.7
30	121	81	40	30	20	13
36	173	115	58	43	29	19

NOTE: ALTERNATE METHOD OF RESTRAINT SHOULD BE CONSIDERED FOR SITUATIONS FALLING WITHIN OUTLINED AREA.

THRUST RESTRAINT WITH ANCHOR RING
(W-13) NOT TO SCALE

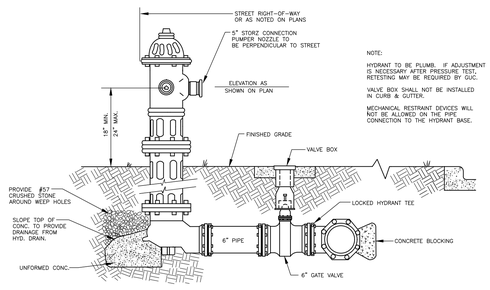

NOTE:
HYDRANT TO BE PLUMB. IF ADJUSTMENT IS NECESSARY AFTER PRESSURE TEST, RETESTING MAY BE REQUIRED BY GUC.

VALVE BOX SHALL NOT BE INSTALLED IN CURB & GUTTER.

MECHANICAL RESTRAINT DEVICES WILL NOT BE ALLOWED ON THE PIPE CONNECTION TO THE HYDRANT BASE.

FIRE HYDRANT INSTALLATION (FOR AREAS WITH CURB AND GUTTER)
(W-4) NOT TO SCALE

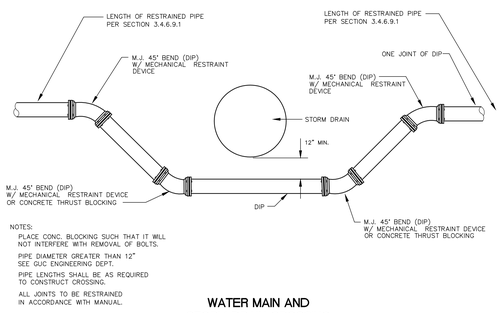

NOTES:
PLACE CONC. BLOCKING SUCH THAT IT WILL NOT INTERFERE WITH REMOVAL OF BOLTS.

PIPE DIAMETER GREATER THAN 12" SEE GUC ENGINEERING DEPT.

PIPE LENGTHS SHALL BE AS REQUIRED TO CONSTRUCT CROSSING.

ALL JOINTS TO BE RESTRAINED IN ACCORDANCE WITH MANUAL.

WATER MAIN AND STORM DRAIN CROSSING
(W-14) NOT TO SCALE

NOTES:
1. USE ONLY BACKFLOW CONTROL ASSEMBLIES APPROVED BY GREENVILLE UTILITIES AND UNIVERSITY OF SOUTHERN CALIFORNIA FOUNDATION FOR CROSS-CONNECTION CONTROL AND HYDRAULIC RESEARCH.
2. THE RP MUST BE INSTALLED ABOVE GROUND AND MUST NOT BE SUBJECT TO BEING SUBMERGED AT ANY TIME.
3. ENCLOSURE MUST PROVIDE ADEQUATE ROOM FOR TESTING AND MAINTENANCE.
4. DRAIN PORTS SHALL BE SIZED TO ADEQUATELY RELIEVE MAXIMUM DISCHARGE OF APPROPRIATE ASSEMBLY.

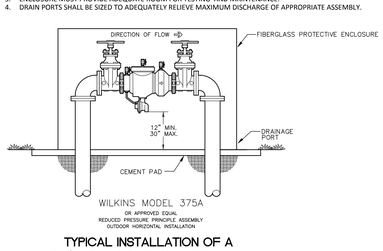

TYPICAL INSTALLATION OF A 2-1/2" RPZ BACKFLOW ASSEMBLY
NOT TO SCALE

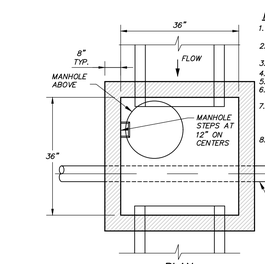

PLAN

NOTES:
1. CHAMFER ALL EXPOSED CORNERS 1".
2. USE CLASS "B" CONCRETE THROUGHOUT.
3. USE #4 BAR AT 6" O.C.
4. MORTAR JOINTS ½" TO ¾" THICK.
5. CONCAVE ALL EXPOSED JOINTS.
6. USE FORMS TO CONSTRUCT THE BOTTOM SLAB.
7. JUMBO BRICK WILL BE PERMITTED. CONCRETE BRICK OR 4" SOLID CONCRETE BLOCKS MAY BE USED IN LIEU OF CLAY BRICK.
8. PROVIDE STEPS IN ALL JUNCTIONS BOXES OVER 3'6" IN DEPTH AT 12" O.C.

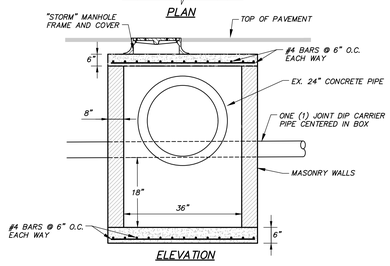

ELEVATION

INTERFERENCE MANHOLE
NOT TO SCALE

NOTE:
FOR 4" SERVICE, BOX TO BE VULCAN MODEL #C8471 WITH #C8460 LID MARKED SEWER.

FOR 6" SERVICE, BOX TO BE EAST JORDAN #15742 WITH LID MARKED SEWER.

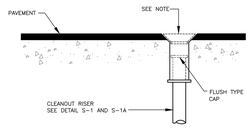

CLEANOUT DETAIL FOR PAVED AREAS
(S-3) NOT TO SCALE

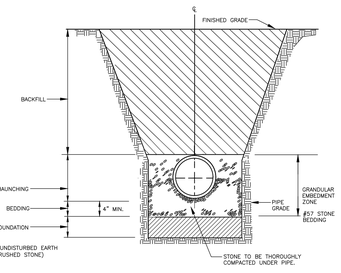

TRENCH SECTION DETAIL FOR THE INSTALLATION OF PVC SANITARY SEWER SERVICE PIPE - SCH40 DWV
(S-10) NOT TO SCALE

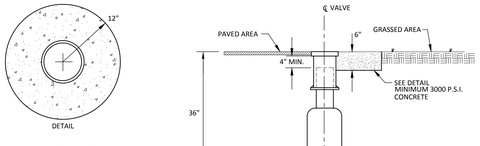

PRECAST CONCRETE COLLAR

NOTE:
VALVE BOX SHALL NOT BE INSTALLED IN CURB AND GUTTER.

VALVE BOX SHALL BE IN ACCORDANCE WITH MANUAL.

VALVE BOX SHALL BE CENTERED AND PLUMBED OVER VALVE.

VALVE BOX DETAIL FOR VALVES SMALLER THAN 12"
(W-7) NOT TO SCALE

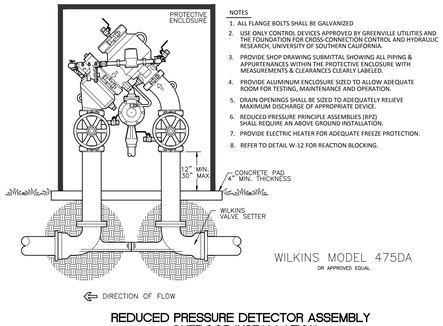

NOTES
1. ALL FLANGE BOLTS SHALL BE GALVANIZED
2. USE ONLY CONTROL DEVICES APPROVED BY GREENVILLE UTILITIES AND THE FOUNDATION FOR CROSS-CONNECTION CONTROL AND HYDRAULIC RESEARCH, UNIVERSITY OF SOUTHERN CALIFORNIA.
3. PROVIDE SHOP DRAWING SUBMITTAL SHOWING ALL PIPING & APPURTENANCES WITHIN THE PROTECTIVE ENCLOSURE WITH MEASUREMENTS & CLEARANCES CLEARLY LABELED.
4. PROVIDE ALUMINUM ENCLOSURE SIZED TO ALLOW ADEQUATE ROOM FOR TESTING, MAINTENANCE AND OPERATION.
5. DRAIN OPENINGS SHALL BE SIZED TO ADEQUATELY RELIEVE MAXIMUM DISCHARGE OF APPROPRIATE DEVICE.
6. REDUCED PRESSURE PRINCIPLE ASSEMBLIES (RPZ) SHALL REQUIRE AN ABOVE GROUND INSTALLATION.
7. PROVIDE ELECTRIC HEATER FOR ADEQUATE FREEZE PROTECTION.
8. REFER TO DETAIL W-12 FOR REACTION BLOCKING.

REDUCED PRESSURE DETECTOR ASSEMBLY OUTDOOR INSTALLATION
NOT TO SCALE

NOTE:
WHEN A SANITARY SEWER MUST BE INSTALLED UNDER A STORM SEWER AND 12" OF VERTICAL SEPARATION CANNOT BE OBTAINED, SUPPORTS SHALL BE PROVIDED FOR THE STORM SEWER. WHEN SEWER IS SDR 35 PVC BEDDING SHALL BE IN ACCORDANCE WITH DETAIL #S-4

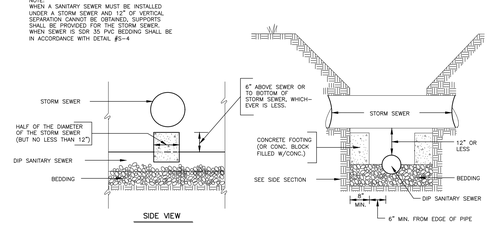

SEWER CROSSING BELOW STORM SEWER
(S-11) NOT TO SCALE

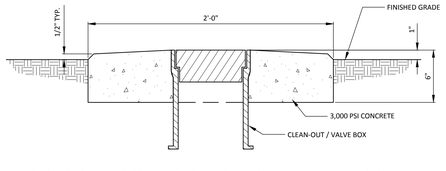

CONCRETE COLLAR CLEAN-OUT / VALVE BOX
DRAWING NO. M-1B (NOT TO SCALE)

Greenville NORTH CAROLINA

JACOBS
333 Fayetteville Street
Suite 1100
Raleigh, NC 27601
www.jacobs.com

AYERS SAINT GROSS

Consultants:
Coaly Design
Landscape Architecture + Land Planning

ARK Consulting Group, PLLC
Engineers & Planners
3280 Charles Blvd. | Suite B
Greenville, NC 27858
(252) 558-0888
NC License: P-1199

Seals:

NORTH CAROLINA PROFESSIONAL SEAL 28425 ENGINEER SCOTT T. ANDERSON
9/10/2016

SCOTT T. ANDERSON, P.E., LICENSE NO. 28425

General Notes:

Project Client:
CITY OF GREENVILLE

GREENVILLE TRANSPORTATION ACTIVITY CENTER
600 S. Pitt Street, Greenville, NC

Number	Description	Date
0	IFC	05-10-2016

Key Plan:

Project North

CAD File:	
Project No.:	L3005900
Copyright:	2015 Jacobs Engineering Group

Drawing Sheet Title:
Details

Drawing Sheet Number:
C-14

Owner's Drawing Sheet No.:
Ark Drawing No. E-1004

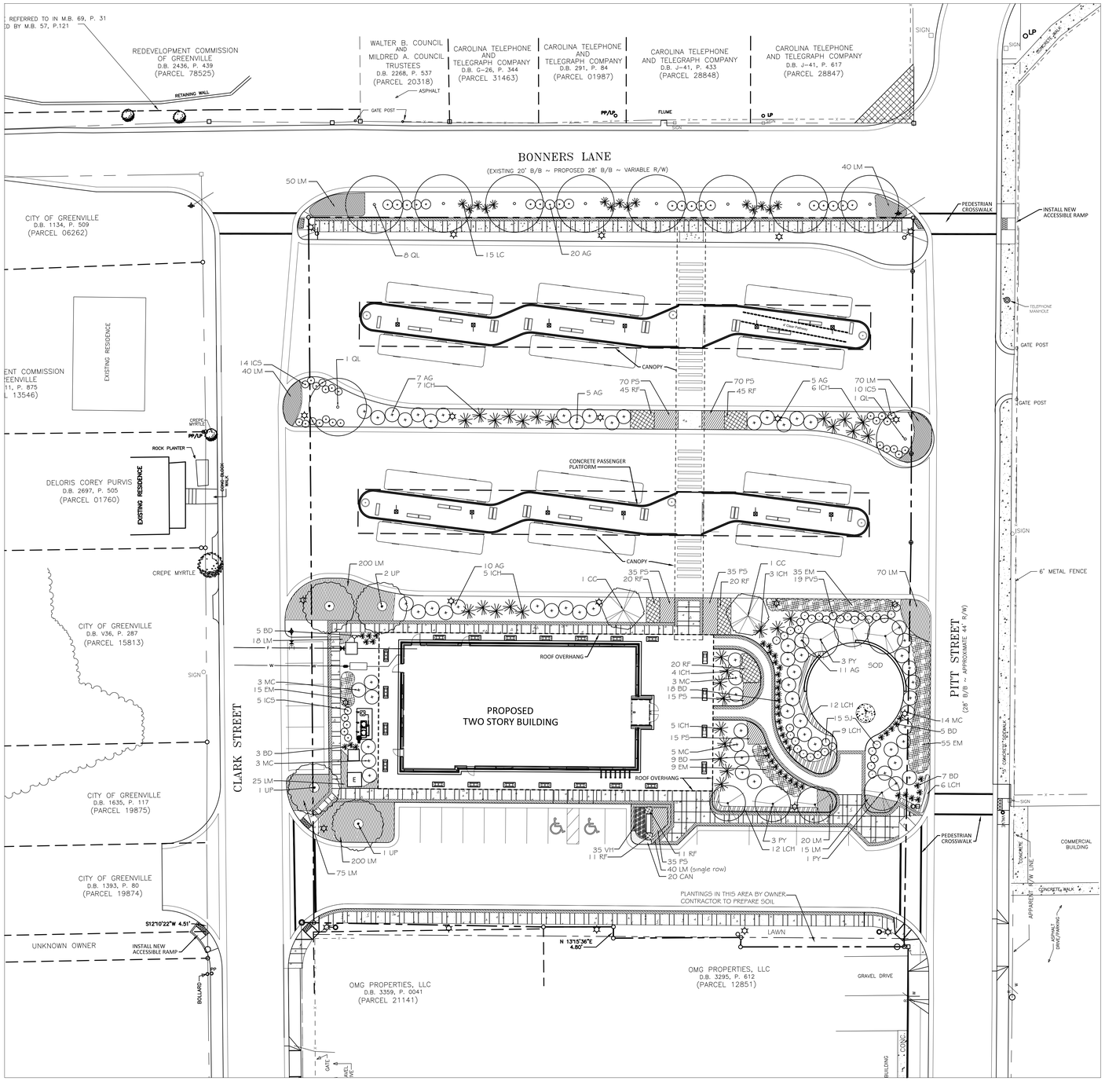

SEEDING AND MULCHING:

ALL AREAS WHERE NATURAL SOD OR VEGETATION HAVE BEEN DISTURBED SHALL BE SEEDED. SEEDING SHALL CONSIST OF:
FERTILIZER: 10-10-10 500 LBS/ACRE
SEED: BERMUDA 80 LBS/ACRE
IF DISTURBED AREA IS IN LANDSCAPED LAWN, THE SEEDING SHALL BE MODIFIED TO RESTORE GROUND COVER COMPARABLE TO THE EXISTING LAWN. SEEDING SHALL BE CARRIED OUT AS SOON AS PRACTICAL AFTER THE CONSTRUCTION IN ANY ONE AREA, AND SHALL BE MAINTAINED AGAINST EROSION THROUGH THE COMPLETION OF THE PROJECT.

THE CONTRACTOR SHALL BE RESPONSIBLE FOR THE PROPER CARE OF THE SEEDED AREA DURING THE PERIOD WHEN VEGETATION IS BEING ESTABLISHED. IN THE EVENT OF AN EROSIVE RAIN BEFORE AN ADEQUATE STAND OF VEGETATION IS ESTABLISHED, DAMAGED AREAS SHALL BE REPAIRED, FERTILIZED, SEEDED, AND MULCHED WHOLLY AT THE CONTRACTOR'S EXPENSE.

SEED BE PREPARATION

1. CHISEL COMPACTED AREAS AND SPREAD TOPSOIL 3 INCHES DEEP OVER ADVERSE SOIL CONDITIONS, IF AVAILABLE.
2. RIP THE ENTIRE AREA TO 6" DEPTH.
3. REMOVE ALL LOOSE ROCK, ROOTS AND OTHER OBSTRUCTIONS LEAVING SURFACE REASONABLY SMOOTH AND UNIFORM.
4. APPLY AGRICULTURAL LIME, FERTILIZER AND SUPER PHOSPHATE UNIFORMLY AND MIX WITH SOIL (SEE BELOW*).
5. CONTINUE TILLAGE UNTIL A WELL-PULVERIZED, FIRM REASONABLY UNIFORM SEEDBED IS PREPARED 4 TO 6 INCHES DEEP.
6. SEED ON A FRESHLY PREPARED SEEDBED AND COVER SEED LIGHTLY WITH SEEDING EQUIPMENT OR CULTIPACK AFTER SEEDING.
7. MULCH IMMEDIATELY AFTER SEEDING AND ANCHOR MULCH.
8. INSPECT ALL SEEDED AREAS AND MAKE NECESSARY REPAIRS OR RESEEDINGS WITHIN THE PLANTING SEASON, IF POSSIBLE. IF STAND SHOULD BE OVER 60% DAMAGED, REESTABLISH FOLLOWING ORIGINAL LIME, FERTILIZER AND SEEDING RATES.
9. CONSULT CONSERVATION INSPECTOR ON MAINTENANCE TREATMENT AND FERTILIZATION AFTER PERMANENT COVER IS ESTABLISHED.

* APPLY:
AGRICULTURAL LIMESTONE - 2 TONS / ACRE (3 TONS / ACRE IN CLAY SOILS)
FERTILIZER - 1,000 LBS / ACRE - 10-10-10
SUPER PHOSPHATE - 500 LBS / ACRE - 20% ANALYSIS
MULCH - 2 TONS / ACRE - SMALL GRAIN STRAW

PLANTING NOTES:

1. All plant materials to comply with American Standard for Nursery Stock ANSI.Z60.
2. Plant locations to be approved in field prior to installation.
3. Substitutions of plant materials specified can only occur with prior approval by Landscape Architect.
4. Establish plant bed configurations. Landscape Architect to approve bed layout in field.
5. Prepare plant and seed beds per specifications above.
6. Install plants and mulch beds with 4" of double shredded hardwood mulch. Keep 6" clear around base of tree / shrub.
7. Seed lawn areas as noted. See specifications this sheet. Backfill lawn areas with topsoil. Bermuda sod to be used in the circular area with the sculpture pad.
8. Landscape Contractor to maintain plant materials for a one year period following substantial completion per specifications.
9. Areas damaged from plant relocation or other activities of Landscape Contractor to be resoeded and established at no additional cost to the owner.
10. Landscape architect and City of Greenville staff to inspect tree planting pits prior to installation of trees.

PLANT SCHEDULE

KEY	BOTANICAL / COMMON NAME	SIZE	ROOT	SPACING
AG	ABELIA X GRANDIFLORA 'EDWARD GOUCHER' / GLOSSY ABELIA	18" HT.	CONT.	4' O.C.
CC	CARPINUS CAROLINIANA / AMERICAN HORNBEAM	1.5" Cal. /8' HT.	B&B	As shown
UP	ULMUS PARVIFOLIA / LACEBARK ELM	2.5" Cal. /10' HT	B&B	As shown
LC	LOROPETALUM CHINENSIS 'RUBY' / CHINESE FRINGE FLOWER	18" HT.	CONT.	4' O.C.
EM	EUONYMUS JAPONICUS 'MICROPHYLLA' / EUONYMUS	12" HT.	CONT.	3' O.C.
MC	MUHLENBERGIA CAPILLARIS / PINK MUHLY GRASS	12" HT.	CONT.	2' O.C.
PS	PHLOX SUBULATA 'FORT HILL' / PHLOX	6" HT.	CONT.	6" O.C.
RF	RUDBECKIA FULGIDA V. SULLIVANTII 'GOLDSTURM'	12" HT.	CONT.	3' O.C.
ICS	ILEX CRENATA 'SOFT TOUCH' / HOLLY	12" HT.	CONT.	3' O.C.
ICH	ILEX CRENATA 'HOOGENDORN' / HOLLY	12" HT.	CONT.	4' O.C.
LM	LIRIOPE MUSCARI 'BIG BLUE' / LIRIOPE	12" HT.	CONT.	2' O.C.
PVS	PANICUM VIRGATUM 'SHENANDOAH' / RED SWITCHGRASS	12" HT.	CONT.	3' O.C.
BD	BUDDLEJA DAVIDII 'BLUE CHIP' / DWARF BUTTERFLY BUSH	12" HT.	CONT.	3' O.C.
SJ	SPIRAEA JAPONICA 'GOLD MOUND' / SPIREA	18" HT.	CONT.	4' O.C.
LCH	LANTANA CAMARA 'CHAPEL HILL YELLOW' / LANTANA	12" HT.	CONT.	4' O.C.
PY	PRUNUS YEDOENSIS / YOSHINO CHERRY	1.5" Cal. /8' HT.	B&B	20' O.C.
CAN	COREOPSIS 'AURICULATA NANA' / COREOPSIS	8-10" HT.	CONT.	12" O.C.
VH	VERBENA CAN. 'HOMESTEAD PURPLE' / VERBENA	8-10" HT.	CONT.	12" O.C.
TO	THUJA OCCIDENTALIS 'EMERALD' / ARBORVITAE	1.5" Cal. /8' HT.	B&B	7' O.C.
JV	JUNIPERUS VIRGINIANA / EASTERN RED CEDAR	1.5" Cal. /8' HT.	B&B	15' O.C.
QL	QUERCUS LYRATA 'HIGHBEAM' / OVERCUP OAK	2.5" Cal. /10' HT.	B&B	30' O.C.

PLANTING PLAN

20 10 0 20 40 60

Greenville NORTH CAROLINA

JACOBS
333 Fayetteville Street
Suite 1100
Raleigh, NC 27601
www.jacobs.com

AYERS SAINT GROSS

Consultants:

Coaly Design
Landscape Architecture + Land Planning

ARK Consulting Group, PLLC
Engineers & Planners
3280 Charles Blvd. | Suite B
Greenville, NC 27858
(252) 558-0888
NC License: P-1199

Seals:

General Notes:

Project Client:
CITY OF GREENVILLE

GREENVILLE TRANSPORTATION ACTIVITY CENTER
600 S. Pitt Street, Greenville, NC

Number	Description	Date
0	IFC	05-10-2016

Key Plan:

Project North

CAD File:
Project No.: L3005900
Copyright: 2015 Jacobs Engineering Group

Drawing Sheet Title:
PLANTING PLAN

Drawing Sheet Number:
LA-1

Owner's Drawing Sheet No.:

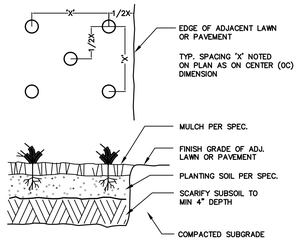

1 / LA-2 GROUNDCOVER PLANTING

NTS

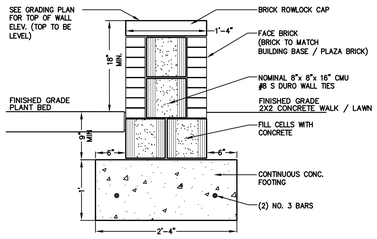

4 / LA-2 BRICK SEAT WALL

+/- 85 lf of seat wall total

NTS

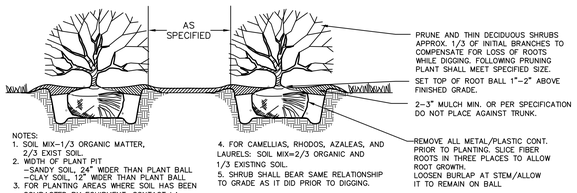

NOTES:
1. SOIL MIX-1/3 ORGANIC MATTER, 2/3 EXIST SOIL.
2. WIDTH OF PLANT PIT
   -SANDY SOIL, 24" WIDER THAN PLANT BALL
   -CLAY SOIL, 12" WIDER THAN PLANT BALL
3. FOR PLANTING AREAS WHERE SOIL HAS BEEN COMPACTED BY EQUIPMENT, CONTACT LA PRIOR TO PLANTING.
4. FOR CAMELLIAS, RHODOS, AZALEAS, AND LAURELS: SOIL MIX=2/3 ORGANIC AND 1/3 EXISTING SOIL.
5. SHRUB SHALL BEAR SAME RELATIONSHIP TO GRADE AS IT DID PRIOR TO DIGGING.

2 / LA-2 SHRUB PLANTING

NTS

NOTES:
-Expansion joints every 30' or as shown on plans
-Control joints every 5' or as shown on plans
-score pattern as shown - 4' x width of path, alternating with 2' x width of path
-concrete pattern on sidewalk to be scored symmetrically between soldier course

STANDARD DUTY

HEAVY DUTY - SCULPTURE BASE

5 / LA-2 CONCRETE SECTION

NTS

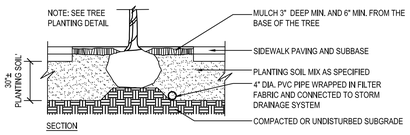

SECTION

NOTES:

1. EACH TREE TO BE PLANTED IN A LANDSCAPE ISLAND OR MEDIAN ISLAND TO BE PROVIDED A MIN. ROOT-ACCESSIBLE SOIL VOLUME OF 600 CUBIC FEET OR A MINIMUM OF 6 ROOT PATHS.
2. THE TREE ROOT AREA BENEATH / ADJACENT TO THE SIDEWALK IS EXPANDED TO MAXIMIZE ROOT ACCESSIBLE SOIL SPACE UNDER THE PAVEMENT.
3. CONNECT SOIL SPACE FOR ROOT EXPANSION WHERE POSSIBLE TO ALLOW ROOT SYSTEMS OF TREES TO OVERLAP AND COLONIZE A SHARED SOIL SPACE.
4. ANY COMBINATION OF STRUCTURAL SOILS OR ROOT CHANNELING (e.g., SOIL STRIP DRAIN/AERATION SYSTEM) THAT PERFORMS AS SPECIFIED IS ACCEPTABLE.
5. 40' X 6' WIDTH MINIMUM APPLIES TO BOTH STRUCTURAL SOILS AND SUBSURFACE SOIL CONTAINMENT SYSTEMS.
6. SUBSURFACE APPLICATION SHALL BE REVIEWED AND APPROVED BY CITY OF GREENVILLE AND THE LANDSCAPE ARCHITECT PRIOR TO INSTALLATION.

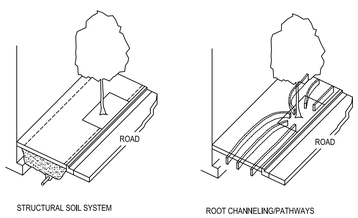

STRUCTURAL SOIL SYSTEM

ROOT CHANNELING/PATHWAYS

TREE PLANTING IN SIDEWALK WITHIN R.O.W.

3 / LA-2 TREE PLANTING

NTS

MATERIAL AND PLANTING DETAILS

Greenville NORTH CAROLINA

JACOBS

333 Fayetteeville Street
Suite 1100
Raleigh, NC 27601

www.jacobs.com

AYERS SAINT GROSS

Consultants:

Coaly Design
Landscape Architecture + Land Planning

ARK Consulting Group, PLLC
Engineers & Planners

3280 Charles Blvd. | Suite B
Greenville, NC 27858
(252) 558-0888
NC License: P-1199

Seals:

NORTH CAROLINA PROFESSIONAL SEAL LANDSCAPE ARCHITECT 2109 KIMBERLY J. WICKER 5-7-16

General Notes:

Project Client:
CITY OF GREENVILLE

GREENVILLE TRANSPORTATION ACTIVITY CENTER
600 S. Pitt Street, Greenville, NC

Number	Description	Date
0	IFC	05-10-2016

Key Plan:

Project North

CAD File:

Project No.: L3005900

Copyright: 2015 Jacobs Engineering Group

Drawing Sheet Title:
DETAILS PLAN

Drawing Sheet Number:
LA-2

Owner's Drawing Sheet No.:

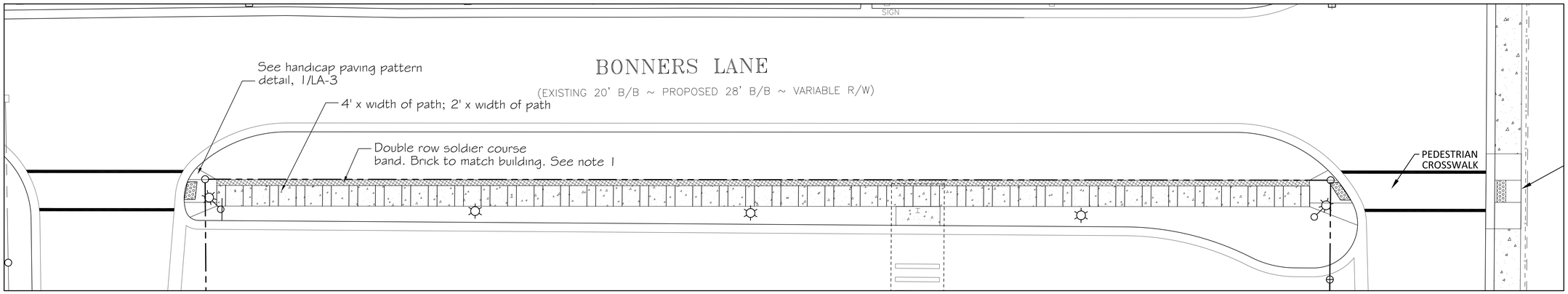

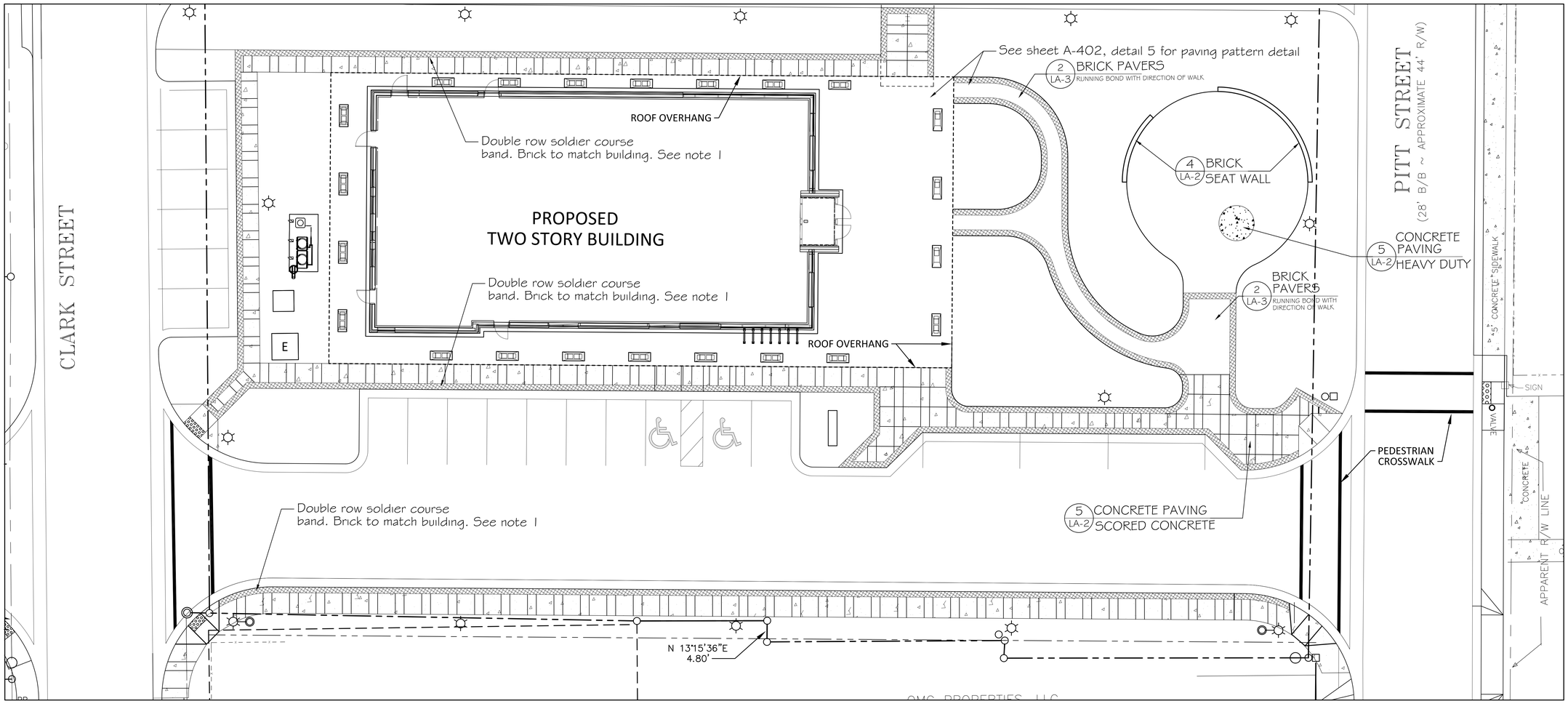

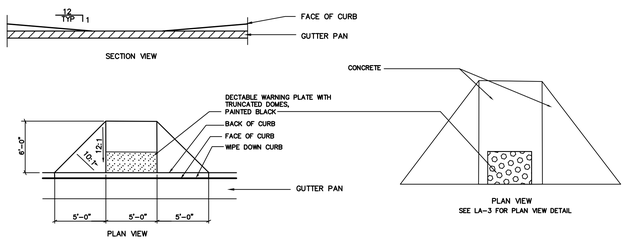

1 LA-3 HANDICAP RAMP

NTS

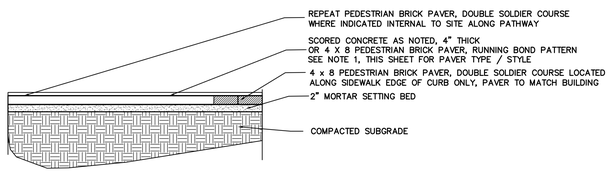

2 LA-3 CONCRETE / PAVER SIDEWALK - SECTION

NTS

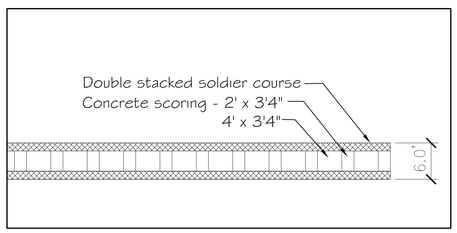

CONCRETE / PAVER SIDEWALK LAYOUT - PLAN

STREETSCAPE NOTES:

1. Pedestrian streetscape paver to match building. Paver to be Sienna Ironspot Velour, by Endicott Clay Products, Co. or approved equal by the City of Greenville.
2. Refer to architectural sheets for paving pattern and type detail under building overhang. Sheet A-402, detail 5.
3. See civil engineering plans for lighting fixture specifications.
4. Bike racks in rear of building to be "Tno" by Forms and Surfaces. www.forms-surfaces.com
Bike racks in the front of the building to be provided by the City of Greenville. Contractor to install all bike racks.
5. Benches to be specified by architect.

STREETSCAPE PLAN

10 5 0 10 20 30

Greenville
NORTH CAROLINA

JACOBS
333 Fayetteville Street
Suite 1100
Raleigh, NC 27601
www.jacobs.com

AYERS SAINT GROSS

Consultants:

Coaly Design
Landscape Architecture + Land Planning

ARK Consulting Group, PLLC
Engineers & Planners
3280 Charles Blvd. | Suite B
Greenville, NC 27858
(252) 558-0888
NC License: P-1199

Seals:

NORTH CAROLINA REGISTERED LANDSCAPE ARCHITECT KIMBERLY J. WICKER 5-7-16

General Notes:

Project Client:
CITY OF GREENVILLE

GREENVILLE TRANSPORTATION ACTIVITY CENTER
600 S. Pitt Street, Greenville, NC

Number	Description	Date
0	IFC	05-10-2016

Key Plan:

Project North

CAD File:	
Project No.:	L3005900
Copyright:	2015 Jacobs Engineering Group

Drawing Sheet Title:
STREETSCAPE PLAN

Drawing Sheet Number:
LA-3

Owner's Drawing Sheet No.:

GENERAL NOTES:

1. ALL DETAILS, SECTIONS, AND NOTES SHOWN ON THE DRAWINGS ARE INTENDED TO BE TYPICAL AND SHALL APPLY TO SIMILAR SITUATIONS, UNO.
2. NO CHANGE IN SIZE, DIMENSION OR POSITION OF STRUCTURAL ELEMENTS SHALL BE MADE WITHOUT THE APPROVAL OF THE STRUCTURAL ENGINEER OF RECORD.
3. REFER TO ARCHITECTURAL, CIVIL, MECHANICAL, ELECTRICAL, PLUMBING, AND FIRE PROTECTION DRAWINGS FOR DIMENSIONS AND LOCATIONS OF OPENINGS, INSERTS, DEPRESSIONS, EQUIPMENT PADS, DRIPS, REVEALS, FINISHES, AND OTHER SUCH PROJECT REQUIREMENTS NOT SHOWN ON STRUCTURAL DRAWINGS.
4. SUBMIT DIMENSIONED COORDINATED SHOP DRAWINGS SHOWING THE LOCATIONS OF ALL SLEEVES AND OPENINGS REQUIRED BY ALL TRADES THROUGH STRUCTURAL ELEMENTS. ANY ADDITIONAL OPENINGS NOT SHOWN ON SHOP DRAWINGS WILL REQUIRE WRITTEN APPROVAL OF THE STRUCTURAL ENGINEER OF RECORD.
5. TAKE ALL MEASURES NECESSARY TO PROTECT EXISTING AND NEW UTILITIES AND BUILDINGS AND ASSUME FULL RESPONSIBILITY FOR ANY DAMAGE DURING CONSTRUCTION. RESTORATION OF DAMAGED AREAS SHALL BE TO THE SATISFACTION OF THE OWNER, AT NO COST TO THE OWNER.
6. REFER TO ARCHITECTURAL DRAWINGS AND SPECIFICATIONS FOR DETAILED INFORMATION REGARDING FINISHES, WATERPROOFING, LOCATIONS OF NON-LOAD BEARING PARTITIONS, EXTERIOR FACE OF BUILDING, ETC.
7. DO NOT REPRODUCE ANY PORTION OF THE STRUCTURAL CONTRACT DRAWINGS FOR RESUBMITTAL AS SHOP DRAWINGS. SHOP DRAWINGS PRODUCED IN SUCH A MANNER WILL BE REJECTED AND RETURNED.
8. DO NOT SCALE THESE DRAWINGS TO DETERMINE DIMENSIONS. USE THE DIMENSIONS SHOWN. REFER TO VENDOR EQUIPMENT DRAWINGS AND OTHER DISCIPLINE DRAWINGS FOR DIMENSIONS NOT SHOWN UNLESS OTHERWISE NOTED.
9. THIS STRUCTURE IS ONLY STABLE IN ITS COMPLETED FORM. THESE DRAWINGS DO NOT SHOW PROVISIONS FOR SAFETY DURING CONSTRUCTION. THE CONTRACTOR SHALL PROVIDE ALL REQUIRED TEMPORARY BRACING AND SAFETY DEVICES DURING CONSTRUCTION TO STABILIZE THE STRUCTURE. TEMPORARY SHORING AND BRACING METHODS ARE NOT THE RESPONSIBILITY OF JACOBS AND ARE BEYOND THE SCOPE OF THESE DRAWINGS.
10. JACOBS IS NOT RESPONSIBLE FOR CONSTRUCTION SEQUENCES, METHODS, OR TECHNIQUES IN CONNECTION WITH THE CONSTRUCTION OF THIS STRUCTURE. THE SER WILL NOT BE HELD RESPONSIBLE FOR THE CONTRACTOR'S FAILURE TO CONFORM TO THE CONSTRUCTION DOCUMENTS, SHOULD ANY NON-CONFORMITIES OCCUR.
11. ANY STRUCTURAL ELEMENTS OR DETAILS NOT FULLY DEVELOPED ON THE CONSTRUCTION DRAWINGS SHALL BE COMPLETED UNDER THE DIRECTION OF A LICENSED PROFESSIONAL ENGINEER IN THE STATE OF NORTH CAROLINA. SHOP DRAWINGS FOR SAID DETAILS SHALL BE SUBMITTED TO JACOBS FOR REVIEW BEFORE ANY CONSTRUCTION BEGINS.

CODES & STANDARDS:

1. THE FOLLOWING CODES AND STANDARDS, INCLUDING ALL SPECIFICATIONS REFERENCED WITHIN, APPLY TO THE DESIGN AND CONSTRUCTION OF THIS PROJECT:

   1.1. NORTH CAROLINA STATE BUILDING 2012 (BASED ON IBC 2009)
   1.2 ASCE 7-05, MINIMUM DESIGN LOADS FOR BUILDINGS AND OTHER STRUCTURES
   1.3 ACI 318-08, BUILDING CODE REQUIREMENTS FOR STRUCTURAL CONCRETE
   1.4 AISC 360-05, SPECIFICATION FOR STRUCTURAL STEEL BUILDINGS, MARCH 9, 2005
   1.5 AISC 303-05, CODE OF STANDARD PRACTICE FOR STEEL BUILDINGS AND BRIDGES, MARCH 18, 2005
   1.6 NDS-05, NATIONAL DESIGN SPECIFICATION FOR WOOD CONSTRUCTION WITH 2005 SUPPLEMENT

DESIGN LOADS:

1. SNOW LOADS
   a. GROUND SNOW LOAD, Pg — 10 PSF
   b. IMPORTANCE FACTOR, Is — 1.0
   c. EXPOSURE FACTOR, Ce — 1.0
   d. THERMAL FACTOR, Ct — 1.0
   e. FLAT ROOF SNOW LOAD, Pf — 10 PSF

2. DEAD AND LIVE LOADS
   2.1. ROOF DEAD LOAD
      2.1.1. CROSS-LAMINATED TIMBER (CLT) PANELS (6.66" THICKNESS) — 17 PSF
      2.1.2. SUPERIMPOSED DEAD LOAD — 20 PSF
      2.1.3. TOTAL DESIGN DEAD LOAD — 37 PSF

   2.2. ROOF LIVE LOAD — 30 PSF

   2.3. TYPICAL FLOOR DEAD LOAD
      2.3.1. CROSS-LAMINATED TIMBER (CLT) PANELS (12.18" THICKNESS) — 32 PSF
      2.3.2. SUPERIMPOSED DEAD LOAD — 25 PSF
      2.3.3. TOTAL DESIGN DEAD LOAD — 57 PSF

   2.4. FLOOR LIVE LOADS
      2.4.1. OFFICE — 50 PSF & 2000 LB CONC
      2.4.2. PARTITIONS — 15 PSF
      2.4.3. CORRIDORS ABOVE 1ST FLOOR — 80 PSF & 2000 LB CONC
      2.4.4. ASSEMBLY, LOBBIES, & 1ST FLOOR CORRIDORS — 100 PSF& 2000 LB CONC
      2.4.5. TERRACE — 100 PSF
      2.4.6. STAIRS & EXIT WAYS — 100 PSF

3. WIND
   a. WIND SPEED — 110 MPH
   b. BUILDING OCCUPANCY CATEGORY — II
   c. EXPOSURE — C
   d. INTERNAL PRESSURE COEFFICIENT, GCPi — +- 0.18
   e. DIRECTIONALITY FACTOR, Kd — 0.85
   f. TOPOGRAPHIC FACTOR, Kzt — 1.0
   g. IMPORTANCE FACTOR
      - MAIN WIND FORCE RESISTING SYSTEM — 1.0
      - COMPONENTS AND CLADDING — 1.0
   h. MAIN WIND-FORCE RESISTING SYSTEM DESIGN LOADS
      - 0 FT - 15 FT — 25.8 PSF
      - 15 FT - 20 FT — 26.7 PSF
      - 20 FT - AND ABOVE — 27.6 PSF
   i. DESIGN BASE SHEARS — Wx (E/W) = 30 k; Wy (N/S) = 60 k

4. SEISMIC
   a. BUILDING OCCUPANCY CATEGORY — II
   b. IMPORTANCE FACTOR, Ie — 1.0
   c. SITE CLASS — D
   d. MAPPED SPECTRAL ACCELERATION
      - SHORT PERIOD, Ss — 0.123 g
      - 1-SECOND PERIOD, S1 — 0.062 g
   e. SPECTRAL RESPONSE COEFFICIENT
      - SHORT PERIOD, Sds — 0.132
      - 1-SECOND PERIOD, Sd1 — 0.100
   f. LONG-PERIOD TRANSITION PERIOD, T1 — 8 sec
   g. SEISMIC DESIGN CATEGORY — B
   h. ANALYSIS PROCEDURE - — CANTILEVERED COLUMNS DETAILED TO CONFORM TO THE REQUIREMENTS FOR TIMBER FRAMES
   j. RESPONSE MODIFICATION COEF, R — 1.5
   k. SYSTEM OVERSTRENGTH COEF., Ωo — 1.5
   l. DEFLECTION AMPLIFICATION COEF, Cd — 1.5
   m. SEISMIC RESPONSE COEFFICIENT, Cs — 0.088
   n. DESIGN BASE SHEAR — Vx (E/W) = 40 k; Vy (N/S) = 40 k

FOUNDATIONS AND EARTHWORK:

1. THE FOUNDATION SYSTEM SHOWN ON THESE DRAWINGS ARE BASED UPON THE SOIL PROPERTIES LISTED BELOW AND RECOMMENDATIONS AS STATED IN THE GEOTECHNICAL REPORT BY ANDREW GLINIAK, P.E. OF TERRACON CONSULTANTS, INC IN THEIR REPORT 72155035 DATED JULY 16, 2015. IT IS THE SOLE RESPONSIBILITY OF THE CONTRACTOR, OWNER OR OWNER'S AGENT TO CONTACT JACOBS AND TERRACON, IF ANY ADVERSE SOIL CONDITIONS ARE ENCOUNTERED DURING CONSTRUCTION.

   a. ALLOWABLE SOIL BEARING PRESSURE — 2000 PSF
   c. SUBGRADE MODULUS (K) — 100 PCI
   d. ULTIMATE FRICTION COEFFICIENT BETWEEN CONCRETE FOUNDATIONS AND SOIL — 0.35
   f. UNIT WEIGHT OF SOIL — 120 PCF (ASSUMED)
   g. AT REST LATERAL EARTH PRESSURE — 67 PSF/FT (ASSUMED)
   h. ALLOWABLE PASSIVE LATERAL EARTH PRESSURE — 270 PSF/FT (ASSUMED)

2. SHORING, TEMPORARY SOIL RETENTION, AND/OR OTHER PROTECTION METHODS SHALL BE EMPLOYED WHEN EXCAVATION AFFECTS ADJACENT IMPROVEMENTS. UNDERPINNING, TEMPORARY SOIL RETENTION, AND OTHER PROTECTION METHODS ARE CONSIDERED MEANS AND METHODS. THE CONTRACTOR SHALL BE FULLY RESPONSIBLE FOR THE DESIGN, INSTALLATION, AND PERFORMANCE OF DEWATERING AND EARTH RETENTION SYSTEMS, INCLUDING SYSTEMS SUCH AS UNDERPINNING, AND BRACING NECESSARY TO PROTECT EXISTING STRUCTURES AND UTILITIES.
3. AFTER THE EXCAVATED AREAS ARE CLEARED OF LOOSE MATERIAL, AND PRIOR TO PLACING CONCRETE, THE SUBGRADE FOR ALL FOUNDATIONS AND SLABS SHALL BE INSPECTED AND APPROVED BY THE GEOTECHNICAL ENGINEER.
4. THE CONCRETE FOUNDATION OR A 3" CONCRETE MUD MAT MUST BE PLACED THE SAME DAY THE SUBGRADE IS INSPECTED. IF THE SURFACE IS DISTURBED BEFORE CONCRETE IS PLACED, THE SUBGRADE SHALL BE REINSPECTED BY THE GEOTECHNICAL'S ENGINEER AT THE CONTRACTORS EXPENSE.
5. WALLS SUPPORTING LATERAL SOIL LOADS HAVE BEEN DESIGNED FOR A DRAINED CONDITION TO RESIST THE LATERAL EARTH PRESSURES LISTED ABOVE.
6. WHEN FILLING AGAINST OPPOSITE SIDES OF A WALL OR STRUCTURE, BACKFILL IN LIFTS SUCH THAT THE DIFFERENCE IN FILL ELEVATION ON OPPOSITE SIDES DOES NOT EXCEED 12"
7. WHERE EXCAVATION WOULD BE BELOW A LINE EXTENDING UPWARD AT 2.0 H TO 1.0 V SLOPE FROM THE BOTTOM OF AN EXISTING FOUNDATION OR UTILITY PROVIDE ALL SHEETING, SHORING, AND BRACING NECESSARY AND TAKE CARE NOT TO UNDERMINE THE EXISTING CONSTRUCTION.
8. UTILITIES SHALL NOT BE LOCATED BENEATH FOUNDATIONS UNLESS SPECIFICALLY INDICATED ON THE STRUCTURAL DRAWINGS.
9. THE BOTTOM OF ALL FOUNDATIONS SHALL EXTEND TO A MINIMUM DEPTH OF 18 INCHES BELOW THE FINISHED GRADE TO ENSURE THE BOTTOM OF THE FOUNDATION IS LOCATED BELOW THE FROST LINE. THE TOP OF COLUMN AND WALL FOOTINGS SHALL BE A MINIMUM OF 12" BELOW GRADE. FOUNDATION ELEVATIONS SHALL NOT BE RAISED OR LOWERED WITHOUT APPROVAL OF THE STRUCTURAL ENGINEER.
10. SEE SPECIFICATION DIVISION 31 FOR ADDITIONAL REQUIREMENTS.

CAST-IN-PLACE CONCRETE

1. PROVIDE CAST-IN-PLACE CONCRETE FOR EACH CLASS OF CONCRETE SHOWN IN THE CONCRETE MATERIAL SCHEDULE AND AS REQUIRED BY CONSTRUCTION METHODS & SCHEDULES.
2. REINFORCING SHALL BE AS FOLLOWS:
   a. WELDED WIRE REINFORCEMENT — ASTM A185, SUPPLIED IN FLAT SHEETS.
   b. DEFORMED REINFORCING BARS — ASTM A615, GRADE 60 UNO.
3. CONCRETE COVER OVER REINFORCING SHALL BE AS FOLLOWS, UNO:
   a. CONCRETE CAST AGAINST & PERMANENTLY EXPOSED TO EARTH OR WEATHER - 3"
   b. CONCRETE EXPOSED TO EARTH OR WEATHER (INCLUDES FOUNDATION WALLS COVERED WITH A WATERPROOF OR DAMP PROOF MEMBRANE)
      - #5 & SMALLER - 1 1/2"
      - #6 & LARGER - 2"
   c. CONCRETE NOT EXPOSED TO EARTH OR WEATHER (INCLUDES ROOF SLABS COVERED WITH A WATERPROOF MEMBRANE)
      - SLABS & WALLS - 3/4"
      - BEAMS & COLUMNS - 1 1/2"
4. SPLICE REINFORCING BARS PER ACI 318 WITH CLASS B TENSION LAP SPLICES, UNO. LAP LENGTHS ARE INDICATED IN THE REINFORCING BAR DEVELOPMENT LENGTH TABLE NOTES.
5. WWR SHALL BE LAP SPLICED PER ACI 318 AND TIED SECURELY.
6. DOWELS SHALL MATCH AND BE CLASS B TENSION LAP SPLICED WITH THE MAIN REINFORCEMENT, UNO.
7. ALL CONC SHALL BE REINFORCED AS INDICATED. WHERE REINFORCING IS NOT INDICATED PROVIDE THE FOLLOWING:
   a. 5" SLABS-ON-GROUND - #3 @ 18" OC
8. FIELD BENDING OF REINFORCEMENT PARTIALLY EMBEDDED IN CONCRETE IS NOT PERMITTED UNLESS INDICATED ON THE DRAWINGS OR APPROVED IN WRITING BY THE STRUCTURAL ENGINEER OF RECORD. REBAR SHALL NOT BE HEATED WITH A TORCH IN THE FIELD.
9. DO NOT WELD REINFORCING UNLESS INDICATED OR APPROVED IN WRITING BY THE STRUCTURAL ENGINEER OF RECORD.
10. ALL CONSTRUCTION JOINTS SHALL BE WIRE BRUSHED, CLEANED, AND COATED WITH A BONDING AGENT OR MOISTENED WITH A CEMENT SLURRY SCRUBBED INTO THE JOINT IMMEDIATELY PRIOR TO PLACING NEW CONCRETE.
11. PROVIDE A WATERSTOP IN ALL WALL AND SLAB CONSTRUCTION JOINTS EXPOSED TO EARTH OR WEATHER OR COVERED WITH A WATERPROOF MEMBRANE AND WHERE INDICATED.
12. CHAMFER ALL EXPOSED CORNERS 3/4", UNO.
13. NO CONDUIT SHALL BE PLACED IN CONCRETE SLAB ON GROUND UNO.
14. SEE SPECIFICATION DIVISION 03 FOR ADDITIONAL REQUIREMENTS.

REINFORCING BAR DEVELOPMENT LENGTHS (INCHES)

BAR SIZE	4000 PSI				4500 PSI			
	TOP BARS		OTHER BARS		TOP BARS		OTHER BARS	
	CASE 1	CASE 2	CASE 1	CASE 2	CASE 1	CASE 2	CASE 1	CASE 2
#3	19	28	15	22	17	25	13	20
#4	25	37	19	29	23	34	17	26
#5	31	47	24	36	28	42	22	32
#6	37	56	29	43	34	50	26	39
#7	54	81	42	63	49	73	38	56
#8	62	93	48	72	56	83	43	64
#9	70	105	54	81	63	94	48	72
#10	79	118	61	91	71	106	54	81
#11	87	131	67	101	78	117	60	90

1. TOP BARS AS DEFINED BY ACI 318-08
2. CASE 1: CLEAR SPACING OF BARS DEVELOPED OR SPLICED NOT LESS THAN db, CLEAR COVER NOT LESS THAN db, AND STIRRUPS OR TIES THROUGHOUT Ld NOT LESS THAN THE CODE MINIMUM OR CLEAR SPACING OF BARS BEING DEVELOPED OR SPLICED NOT LESS THAN 2db AND CLEAR COVER NOT LESS THAN db.
   CASE 2. BARS DEVELOPED OR SPLICED WITH CLEAR COVER AND/OR SPACING NOT MEETING THE REQUIREMENTS OF CASE 1.
3. SPLICE LENGTHS:
   A. CLASS A TENSION SPLICE = 1.0 Ld, 12 in MIN
   B. CLASS B TENSION SPLICE = 1.3 Ld, 12 in MIN
   C. COMPRESSION SPLICE = 30db, 12 in MIN
4. DEVELOPMENT AND SPLICE LENGTH OF EPOXY COATED BARS SHALL BE 1.5 TIMES THE LENGTHS REQUIRED FOR NON-EPOXY COATED REINFORCEMENT.

CONCRETE MATERIAL SCHEDULE

ELEMENT	F'c (psi)	MAXIMUM WATER/ CEMENTITIOUS RATIO	DRY UNIT WEIGHT (lb/ft³)	MAX AGGREGATE SIZE (in)	AGGREGATE CLASS DESIGNATION (ASTM C33)	ENTRAINED AIR CONTENT (%)	SLUMP* ±1 (in)	MAXIMUM CHLORIDE CONTENT (%)
FOOTINGS	4,500	0.45	145	3/4	3S	5% +/- 1%	4/8	0.30
INTERIOR SLAB ON GROUND	4,000	0.48	145	3/4	2S	-	3/8	0.30
EXTERIOR CONCRETE	4,500	0.45	145	3/4	4S	5 1/2% +/- 1/2%	4/8	0.15

* VALUES SHOWN ARE MAX SLUMP OF THE CONCRETE AS PLACED WITHOUT SUPERPLASTICIZERS OVER MAX SLUMP IF SUPERPLASTICIZERS ARE USED.

POST-INSTALLED ANCHOR AND REINFORCING NOTES

1. ONLY POST-INSTALLED CHEMICAL/EPOXY BONDED ANCHOR RODS ARE ACCEPTABLE.
2. ANCHORING TO CONCRETE SHALL BE IN CONFORMANCE WITH ACI 318, APPENDIX D. POST INSTALLED ANCHORS ARE REQUIRED TO BE PRE-QUALIFIED PER ACI 355 TESTS.
3. MEET ALL MANUFACTURER'S REQUIREMENTS AND SPECIFICATIONS TO OBTAIN THE LISTED LOAD CAPACITY INCLUDING ANCHOR INSTALLATION PROCEDURES, HOLE DIAMETER, SPACING, EDGE DISTANCE, AND EMBEDMENT.
4. ONLY APPROVED CHEMICAL BONDING AGENT OR EPOXY SHALL BE USED FOR ALL POST-INSTALLED ANCHOR RODS. CEMENT OR OTHER GROUTS ARE NOT TO BE USED.
5. FOR POST-INSTALLED ANCHORS, USE HILTI HIT-HY 200 ADHESIVE, UNLESS NOTED OTHERWISE.
6. DRILLING INTO IN-PLACE WORK SHALL BE PERFORMED IN A MANNER WHICH AVOIDS DAMAGE TO ALL EXISTING REINFORCEMENT UNLESS OTHERWISE ACCEPTED BY THE DESIGN PROFESSIONAL. USE A BAR DETECTION METHOD TO LOCATE EXISTING REINFORCEMENT PRIOR TO DRILLING.

STRUCTURAL STEEL:

1. STRUCTURAL STEEL SHALL CONFORM TO THE FOLLOWING DESIGNATIONS, UNO:
   W & WT SHAPES — ASTM A992
   CHANNELS — ASTM A36
   ANGLES — ASTM A36
   RECTANGULAR & SQUARE HSS — ASTM A500, GRADE B
   OTHER SHAPES AND PLATES — ASTM A36
   ANCHOR RODS — ASTM F1554, GRADE 36
   THREADED RODS — ASTM A36
2. BOLTS SHALL BE MINIMUM 3/4" DIAMETER AND SHALL CONFORM TO THE FOLLOWING DESIGNATIONS, UNO:
   HIGH STRENGTH BOLTS — ASTM A325 OR A490
3. NON-SHRINK GROUT UNDER STEEL PLATES SHALL HAVE A MINIMUM 28 DAY DESIGN COMPRESSIVE STRENGTH OF 7000 PSI.
4. WELDING ELECTRODES AND FLUXES SHALL CONFORM TO ONE OF THE SPECIFICATIONS OF THE AWS LISTED IN STRUCTURAL WELDING CODE - STEEL, AWS D1.1. ELECTRODES SHALL HAVE A MINIMUM TENSILE STRENGTH OF 70 KSI.
5. FILLET WELDS SHALL HAVE A MINIMUM SIZE OF 1/4", UNLESS OTHERWISE INDICATED.
6. IF PARTS JOINED BY FILLET WELDS ARE SEPARATED BY MORE THAN 1/16", THE LEG OF THE FILLET WELD SHALL BE INCREASED BY THE AMOUNT OF THE ROOT OPENING. ROOT OPENING SHALL NOT EXCEED 3/16".
7. BOLTED CONNECTIONS SHALL HAVE A MINIMUM OF 2 BOLTS.
8. HIGH STRENGTH BOLTED CONNECTIONS SHALL BE SLIP-CRITICAL FOR MEMBERS WITH OVERSIZED HOLES, SLOTTED HOLES WHERE THE FORCE IS ACTING IN THE SAME DIRECTION AS THE SLOT, WHERE AXIAL REACTIONS ARE NOTED, MOMENT CONNECTIONS, AND BEAM SPLICES. OTHER HIGH STRENGTH BOLTED SHEAR CONNECTIONS MAY BE TIGHTENED TO THE SNUG TIGHT CONDITION, UNO.
9. CONTRACTOR SHALL RETAIN A QUALIFIED PROFESSIONAL ENGINEER REGISTERED IN THE STATE OF NORTH CAROLINA TO DESIGN CONNECTIONS NOT SPECIFICALLY DETAILED ON THE DRAWINGS.
10. SIMPLE SHEAR CONNECTIONS SHALL BE BEARING TYPE CONNECTIONS WITH THREADS ASSUMED INCLUDED IN THE SHEAR PLANE. THE CAPACITIES SHALL BE AS INDICATED BELOW.
11. MOMENT CONNECTIONS SHALL BE DESIGNED FOR THE COMBINED EFFECT OF THE FORCES RESULTING FROM THE MOMENT AND SHEAR INDICATED. WHEN THE DESIGN MOMENT IS NOT INDICATED THE CONNECTION SHALL BE CAPAEDEVELOPING THE FULL MOMENT CAPACITY, ØbMp, OF THE SUPPORTED BEAM. MOMENT CONNECTIONS MAY UTILIZE WELDS OR MINIMUM 3/4" DIAMETER BOLTS.
12. ALL BEAMS FRAMING INTO CONCRETE OR MASONRY WALLS SHALL BE DETAILED TO SUIT THE HORIZONTAL FIELD TOLERANCES.
13. DO NOT FIELD CUT STRUCTURAL STEEL MEMBERS WITHOUT THE WRITTEN APPROVAL OF THE STRUCTURAL ENGINEER OF RECORD.
14. DO NOT SPLICE STEEL MEMBERS EXCEPT WHERE SPECIFICALLY DETAILED ON THE DRAWINGS WITHOUT THE WRITTEN APPROVAL OF THE STRUCTURAL ENGINEER OF RECORD.
15. RECTANGULAR HSS BEAMS SHALL BE ORIENTED WITH LONG DIMENSION VERTICAL UNLESS NOTED OTHERWISE AS "FLAT".
16. SEE SPECIFICATIONS DIVISION 05 FOR ADDITIONAL REQUIREMENTS.

STRUCTURAL DRAWING INDEX

DRAWING NO.	DRAWING TITLE
S-001	DESIGN CRITERIA AND GENERAL NOTES
S-002	GENERAL NOTES AND SPECIFICATIONS
S-101	FOUNDATION PLAN
S-102	SECOND FLOOR FRAMING PLAN
S-103	ROOF FRAMING PLAN
S-200	LATERAL FRAME ELEVATIONS
S-301	BUS BAY FOUNDATION PLAN
S-302	BUS BAY FRAMING PLAN
S-401	SECOND FLOOR LOADING PLAN
S-402	ROOF LOADING PLAN & WALL LOADING DIAGRAM
S-501	FOUNDATION SECTIONS & DETAILS
S-511	FLOOR FRAMING SECTIONS & DETAILS
S-512	FLOOR FRAMING SECTIONS & DETAILS
S-513	FLOOR FRAMING SECTIONS & DETAILS
S-514	ROOF FRAMING SECTIONS & DETAILS
S-515	ROOF FRAMING SECTIONS & DETAILS
S-701	TYPICAL FOUNDATION DETAILS
S-702	TYPICAL FOUNDATION DETAILS
S-711	TYPICAL CLT FRAMING DETAILS

Greenville
NORTH CAROLINA

JACOBS
333 Fayetteville Street, Suite 1100
Raleigh, NC 27601
PH: 919-334-3100 FX: 919-334-3122 www.jacobs.com
North Carolina Engineering Firm License No. F-287
North Carolina Architectural Firm Reg. No. 50757

AYERS SAINT GROSS

Consultants:
ARK Consulting Group, PLLC

Coaly Design
Landscape Architecture + Land Planning

Seals:

NORTH CAROLINA PROFESSIONAL SEAL 030518 ENGINEER TREVOR WINNELL

05/10/2016

General Notes:

Project Client:
CITY OF GREENVILLE

GREENVILLE TRANSPORTATION AND ACTIVITY CENTER
600 S. Pitt Street, Greenville, NC

Number	Description	Date
0	IFC	05/10/16

Key Plan: Project North

CAD File:
Project No.: L3005900
Copyright: 2015 Jacobs Engineering Group

Drawing Sheet Title:
DESIGN CRITERIA AND GENERAL NOTES

Drawing Sheet Number:
S-001

Owner's Drawing Sheet No.:

TIMBER AND ENGINEERED LUMBER NOTES

1. SOLID SAWN WOOD FRAMING SHALL CONFORM TO THE SPECIFICATIONS AS LISTED IN THE NATIONAL FOREST PRODUCTS ASSOCIATION "NATIONAL DESIGN SPECIFICATION FOR WOOD CONSTRUCTION" LATEST EDITION (NDS). PROVIDE DRESSED LUMBER, S4S, UNLESS OTHERWISE INDICATED. WITH A MAXIMUM MOISTURE CONTENT FOR DIMENSION LUMBER OF 15 PERCENT FOR 2-INCH NOMINAL THICKNESS OR LESS, 19 PERCENT FOR MORE THAN 2-INCH NOMINAL THICKNESS. TIMBER FRAMING (LARGER THAN 5X5 NOMINAL) SHALL HAVE A MAXIMUM MOISTURE CONTENT OF 20 PERCENT. THE FRAMING SHALL BE OF THE SPECIES AND GRADE AS LISTED BELOW UNLESS OTHERWISE NOTED ON THE FRAMING PLANS:
   1.1 JOISTS, RAFTERS, AND WOOD GIRDERS AND BEAMS SYP No. 2
   1.2 STUDS SEE SCHEDULE
   1.3 TIMBER FRAMING (LARGER THAN 5X5 NOMINAL) SYP No. 2

5. LUMBER IN CONTACT WITH CONCRETE, MASONRY, EARTH OR FRAMING MEMBERS THAT ARE LESS THAN 18 INCHES ABOVE THE GROUND IN CRAWL SPACES OR UNEXCAVATED AREAS, AND ALL OTHER EXPOSED TIMBER SHALL BE PRESSURE TREATED IN ACCORDANCE WITH AWPA STANDARD C-2, CONTAINING NO ARSENIC OR CHROMIUM.

6. FRAMING SHALL COMPLY WITH AF&PA'S "DETAILS FOR CONVENTIONAL WOOD FRAME CONSTRUCTION," UNLESS OTHERWISE INDICATED. STRUCTURAL MEMBERS SHALL NOT BE SPLICED BETWEEN SUPPORTS, UNLESS OTHERWISE INDICATED. STUDS SHALL BE CONTINUOUS FROM THE SOLE PLATE TO THE TOP PLATE. STUDS SHALL ONLY BE DISCONTINUOUS WHEN SUPPORTING BEAMS OR HEADERS AT OPENINGS. THOSE STUDS SHALL BE ATTACHED TO CONTINUOUS STUDS IN ACCORDANCE WITH THE REQUIREMENTS ON THE DESIGN DOCUMENTS.
   6.1 PROVIDE SOLID BLOCKING BETWEEN FLOOR FRAMING MEMBERS UNDER JAMB STUDS, AND STUD COLUMNS SUPPORTING BEAMS OR GIRDERS.

7. SECURELY ATTACH ROUGH CARPENTRY WORK TO SUBSTRATE BY ANCHORING AND FASTENING AS INDICATED BELOW. WHERE ROUGH CARPENTRY IS EXPOSED TO WEATHER, IN GROUND CONTACT, PRESSURE-PRESERVATIVE TREATED, OR IN AREA OF HIGH RELATIVE HUMIDITY, PROVIDE FASTENERS WITH HOT-DIP ZINC COATING COMPLYING WITH ASTM A 153:
   7.1 NES NER-272 FOR POWER-DRIVEN FASTENERS.
   7.2 TABLE 2304.9.1, "FASTENING SCHEDULE," IN ICC'S INTERNATIONAL BUILDING CODE.
   7.3 NAILS, BRADS, AND STAPLES: ASTM F 1667
   7.4 WOOD SCREWS: ASME B18.6.1.
   7.5 LAG BOLTS: ASME B18.2.1
   7.6 STEEL BOLTS COMPLYING WITH ASTM A 307, GRADE A; WITH ASTM A 563 HEX NUTS AND, FLAT WASHERS.

8. USE COMMON WIRE NAILS, UNLESS OTHERWISE INDICATED. SELECT FASTENERS OF SIZE THAT WILL NOT FULLY PENETRATE MEMBERS WHERE OPPOSITE SIDE WILL BE EXPOSED TO VIEW OR WILL RECEIVE FINISH MATERIALS. MAKE TIGHT CONNECTIONS BETWEEN MEMBERS. INSTALL FASTENERS WITHOUT SPLITTING WOOD; DO NOT COUNTERSINK NAIL HEADS, UNLESS OTHERWISE INDICATED.

9. EXPANSION ANCHORS AS NOTED ON THESE DRAWINGS SHALL BE OF CARBON-STEEL COMPONENTS, ZINC PLATED TO COMPLY WITH ASTM B 633, CLASS FE/ZN 5. ASSEMBLY SHALL SUSTAIN, WITHOUT FAILURE, A LOAD EQUAL TO 6 TIMES THE LOAD IMPOSED WHEN INSTALLED IN UNIT MASONRY ASSEMBLIES AND EQUAL TO 4 TIMES THE LOAD IMPOSED WHEN INSTALLED IN CONCRETE AS DETERMINED BY TESTING PER ASTM E 488 CONDUCTED BY A QUALIFIED INDEPENDENT TESTING AND INSPECTING AGENCY.

10. PROVIDE METAL FRAMING ANCHORS PRODUCTS AS INDICATED BY SIMPSON STRONG-TIE CO., INC. OR COMPARABLE PRODUCTS. MATERIAL FOR INTERIOR FRAMING SHALL BE HOT-DIP, ZINC-COATED STEEL SHEET COMPLYING WITH ASTM A 653, G90 COATING DESIGNATION. UNLESS STAINLESS STEEL IS INDICATED. EXTERIOR LOCATIONS SHALL BE STAINLESS-STEEL SHEET CONFORMING TO ASTM A 666, TYPE 304. INSTALL METAL FRAMING TO COMPLY WITH MANUFACTURER'S WRITTEN INSTRUCTIONS.

11. ALL STRUCTURAL GLUED LAMINATED TIMBER (GLULAM) AND CROSS LAMINATED TIMBER (CLT) SHALL BE FURNISHED AS SHOWN ON THE PLANS AND SPECIFIED HEREIN.

12. ALL GLULAM AND CROSS LAMINATED TIMBER SHALL BE MANUFACTURED IN ACCORDANCE WITH ANSI/AITC A190.1-2007. EACH TIMBER SHALL BE MARKED WITH THE AITC QUALITY MARK OR BE ACCOMPANIED WITH AN AITC CERTIFICATE OF CONFORMANCE. ONLY TIMBERS SPECIFIED TO BE SURFACED ON ALL FOUR SIDES FOR APPEARANCE REQUIREMENTS SHALL NOT BE GRADE MARKED, BUT SHALL BE ACCOMPANIED BY AN AITC CERTIFICATE OF CONFORMANCE.

13. ALL SOFTWOOD GLULAM TIMBER SHALL MEET THE REQUIREMENTS OF STRESS CLASS 24F-1.8E FROM AITC 117-2004 DESIGN OR 2005 NATIONAL DESIGN SPECIFICATION (NDS). UNLESS OTHERWISE NOTED, GLULAM TIMBER BEAMS SHALL HAVE BALANCED LAYUP.

14. ALL GLULAM TIMBERS SHALL BE MANUFACTURED FROM BLACK SPRUCE, LODGEPOLE PINE, DOUGLAS FIR, OR SPRUCE-PINE-FIR.

15. REFER TO THE ARCHITECTURAL SPECIFICATIONS AND DRAWINGS FOR APPEARANCE GRADES AND FINISH REQUIREMENTS.

16. FABRICATION DETAIL SHOP DRAWINGS ARE NOT ATTACHED. FABRICATION SHALL BE PERFORMED BY THE MANUFACTURE. CONNECTION HARDWARE SHALL BE SUPPLIED BY SIMPSON STRONG-TIE AND AS REQUIRED BY MANUFACTURER. STEEL FASTENERS SHALL CONFORM TO ASTM A307 UNLESS OTHERWISE NOTED. OTHER STEEL SHALL CONFORM TO ASTM A36 UNLESS OTHERWISE NOTED.

17. GLULAM TIMBERS SHALL BE INDIVIDUALLY WRAPPED.

18. REFER TO DIVISION 06 OF THE SPECIFICATIONS FOR ADDITIONAL INFORMATION.

ENGINEERED LUMBER DESIGN DELEGATION

1. DESIGN OF ALL ENGINEERED LUMBER AND THEIR CONNECTIONS SHALL BE THE SOLE RESPONSIBILITY OF THE CONTRACTOR. SUBMIT STRUCTURAL DRAWINGS, DESIGN LOAD DATA AND SUPPORT REACTIONS OF ENGINEERED LUMBER AND THEIR CONNECTIONS, SEALED BY AN ENGINEER LICENSED IN THE STATE OF NORTH CAROLINA.

2. STRUCTURAL DRAWINGS SHOW THE PRELIMINARY SIZES OF ENGINEERED LUMBER MEMBER THAT WERE ASSUMED FOR DESIGN. DESIGNOF THE ENGINEERED LUMBER SHALL BE BY THE MANUFACTURER.

3. SUBMIT SIGNED AND SEALED DRAWINGS PROVIDED BY ENGINEER TO JACOBS FOR REVIEW. JACOBS RESERVES THE RIGHT TO MODIFY ANY STRUCTURAL ELEMENT SHOWN ON THESE DRAWINGS ONCE FINAL CERTIFIED DRAWINGS HAVE BEEN RECEIVED.

3. CONNECTIONS:
   a. THE DESIGN AND FREQUENCY OF CONNECTIONS SHALL BE THE RESPONSIBILITY OF THE ENGINEERED LUMBER SUPPLIER AND THE DESIGN ENGINEER IN COORDINATION WITH THE ENGINEERED LUMBER DESIGN ITSELF. SHOP DRAWINGS SHALL ADEQUATELY DEPICT THE ATTACHMENT LOCATIONS.
   b. SUBMIT REACTIONS OF ALL ENGINEERED LUMBER ELEMENTS SHOWN ON THE DRAWINGS.

4. GLULAM BEAM AND COLUMN SIZES, AND CLT PANEL SIZE SHALL BE DETERMINED BY THE MANUFACTURER BUT SHALL MEET REQUIRED CLEARANCES AND MINIMUM SIZES SHOWN WITHIN THESE DRAWINGS AND BE APPROVED BY CONTRACTOR AND DESIGN TEAM.

5. REFER TO ARCHITECTURE DRAWINGS FOR LOCATIONS OF ALL OPENINGS IN CLT WALL PANELS. SUBMIT CERTIFIED SHOP DRAWING FOR REVIEW WITH PANEL ELEVATIONS LOCATING OPENING AND OPENING SIZES

6. SEE SPECIFICATION DIVISION 06 FOR ADDITIONAL REQUIREMENTS.

7. CROSS LAMINATED TIMBER BASIS OF DESIGN: STRUCTURLAM, INNOVATIVE WOOD SPECIALIST.

ABBREVIATIONS

ACI	AMERICAN CONCRETE INSTITUTE
AD	AREA DRAIN
ADDL	ADDITIONAL
ADH	ADHESIVE
ADJ	ADJACENT
AE	AIR ENTRAINED
AHR	ANCHOR
AISC	AMERICAN INSTITUTE OF STEEL CONSTRUCTION
ALNMT	ALIGNMENT
ALT	ALTERNATE
AB	ANCHOR BOLT
&	AND
APPROX	APPROXIMATE
ARCH	ARCHITECT or ARCHITECTURAL
ASCE	AMERICAN SOCIETY OF CIVIL ENGINEERS
ASTM	AMERICAN SOCIETY FOR TESTING & MATERIALS
@	AT
AWS	AMERICAN WELDING SOCIETY
B/B	BACK TO BACK
B PL	BASE PLATE
BSMT	BASEMENT
BM	BEAM
BTW	BETWEEN
BRG	BEARING
BRG PL	BEARING PLATE
BF	BOTH FACES
BS	BOTH SIDES
BOT	BOTTOM
B/	BOTTOM OF
B/STL	BOTTOM OF STEEL
BRDG	BRIDGING
BLDG	BUILDING
CANT	CANTILEVER
℄	CENTER LINE
C TO C	CENTER TO CENTER
CF	CUBIC FEET
CHFR	CHAMFER
CIP	CAST-IN-PLACE
CJ	CONTROL JOINT
CLMS	CONTROLLED LOW STRENGTH MATERIALS
CLR	CLEAR
CLT	CROSS LAMINATED TIMBER
CMU	CONCRETE MASONRY UNIT
CO	CLEANOUT
COL	COLUMN
CONC	CONCRETE
CONN	CONNECTION
CONST	CONSTRUCTION
CONST JT	CONSTRUCTION JOINT
CONT	CONTINUOUS
CONTR	CONTRACTOR
COORD	COORDINATE
COTR	CONTRACTING OFFICER TECH REPRESENTATIVE
CY	CUBIC YARD
D	DEPTH
db	REINF BAR DIAMETER
DBA	DEFORMED BAR ANCHOR
DBL	DOUBLE
DL	DEAD LOAD
DEMO	DEMOLITION
DEP	DEPRESSED or DEPRESSION
DIAG	DIAGONAL
DIA	DIAMETER
DIM	DIMENSION
DK	DECK
DN	DOWN
DR	DRAIN
DTL	DETAIL
DWG(S)	DRAWING(S)
EA	EACH
EE	EACH END
EF	EACH FACE
EL	ELEVATION
ELEC	ELECTRIC or ELECTRICAL
ELEV	ELEVATOR
EMB	EMBED or EMBEDDED
EOD	EDGE OF DECK
EOP	EDGE OF PANEL
EOS	EDGE OF SLAB
EQ	EQUAL
EQL SP	EQUALLY SPACED
EQUIP	EQUIPMENT
EST	ESTIMATE
ETC	ET CETERA
EW EF	EACH WAY EACH FACE
EW	EACH WAY
EXIST	EXISTING
EXP JT or EJ	EXPANSION JOINT
EXT	EXTERIOR
FA	FALL ARREST ANCHOR
FD	FLOOR DRAIN
FDN	FOUNDATION
FIG	FLANGE
FIN	FINISH or FINISHED
FLR	FLOOR
FOW	FACE OF WALL
FP	FIRE PROTECTION
FT	FOOT or FEET
FTG	FOOTING
GA	GAGE or GAUGE
GALV	GALVANIZED
GALV STL	GALVANIZED STEEL
GC	GENERAL CONTRACTOR
GR	GRADE
GLB	GLULAM BEAM
H	HIGH
H EF	HORIZONTAL EACH FACE
HCA	HEADED CONCRETE ANCHOR
HGR	HANGER
HK	HOOK
HORIZ	HORIZONTAL
HP	HIGH POINT
HPC	HIGH PERFORMANCE COATING
HSA	HEADED SHEAR ANCHOR
HT	HEIGHT
HVAC	HEATING, VENTILATING, AND AIR CONDITIONING
ID	INSIDE DIAMETER
IF	INSIDE FACE
IN	INCH
INCL	INCLUDED
INFO	INFORMATION
INT	INTERIOR
INV EL	INVERT ELEVATION
IP	INFLECTION POINT
JCT	JUNCTION
JT	JOINT
JST	JOIST
KB	KNEE BRACE
KSF	KIPS PER SQUARE FOOT
KSI	KIPS PER SQUARE INCH
KOP	KNOCK OUT PANEL
L	ANGLE
LB	POUND
Ld	REINF BAR DEVELOPMENT LENGTH
LE	LEFT END
LL	LIVE LOAD
LLH	LONG LEG HORIZONTAL
LLV	LONG LEG VERTICAL
LP	LOW POINT
LRL	LIVE ROOF LOAD
LTWT	LIGHT WEIGHT
MAS	MASONRY
MATL	MATERIAL
MAX	MAXIMUM
MC	MOMENT CONNECTION
MECH	MECHANICAL
MEP	MECHANICAL, ELECTRICAL, AND PLUMBING
MEZZ	MEZZANINE
MFR	MANUFACTURE(R)
MID	MIDDLE
MIN	MINIMUM
MISC	MISCELLANEOUS
MOW	MIDDLE OF WALL
MTL	METAL
MW	MEMBRANE WATERPROOFING
N	NORTH
N.I.C.	NOT IN CONTRACT
NLWT	NORMAL WEIGHT
NOM	NOMINAL
No. or #	NUMBER
NTS	NOT TO SCALE
OC	ON CENTER
OD	OUTSIDE DIAMETER OPENING
OF	OUTSIDE FACE
OPNG	OPENING
OPP	OPPOSITE
OPP HD	OPPOSITE HAND
PC	PILE CAP
PC CONC	PRECAST CONCRETE
PEN	PENETRATION
PJP	PARTIAL JOINT PENETRATION
PL	PLATE
PLUMB	PLUMBING
P.L. or PROP LINE	PROPERTY LINE
PS CONC	PRESTRESSED CONCRETE
PSF	POUND PER SQUARE FOOT
PSI	POUND PER SQUARE INCH
PT	POST-TENSIONED
PT CONC	POST-TENSIONED CONCRETE
RAD or R	RADIUS
RE	RIGHT END
REF	REFERENCE
REINF	REINFORCEMENT or REINFORCING
REBAR	REINFORCING STEEL BARS
REQD	REQUIRED
REV	REVISION
RF	ROOF
RFI	REQUEST FOR INFORMATION
SC	SLIP CONNECTION
SCH OR SCHED	SCHEDULE
SECT	SECTION
SHT	SHEET
SIM	SIMILAR
SK	SKETCH
SL	SNOW LOAD
SLV	SLEEVE
SOG	SLAB-ON-GRADE
SPEC	SPECIFICATION
SQ	SQUARE
SQ FT	SQUARE FOOT
SSTL	STAINLESS STEEL
STAG	STAGGERED
STD	STANDARD
STIF	STIFFENER
STIR	STIRRUPS
SJI	STEEL JOIST INSTITUTE
STL	STEEL
STRUCT	STRUCTURAL
SUPP	SUPPORT
SW	SHEAR WALL
SYMM	SYMMETRICAL or SYMMETRY
T/	TOP OF
TB	THROUGH BOLT
T&B	TOP AND BOTTOM
T/CONC	TOP OF CONCRETE
TEMP	TEMPORARY
THK	THICK or THICKNESS
THRU	THROUGH
TMS	THE MASONRY SOCIETY
TOF	TOP OF FOOTING
TOL	TOLERANCE
T/SLAB	TOP OF SLAB
T/STL	TOP OF STEEL
TYP	TYPICAL
UNO	UNLESS NOTED OTHERWISE
V EF	VERTICAL EACH FACE
VERT	VERTICAL
VR	VAPOR RETARDER
VIF	VERIFY IN FIELD
W	WIDTH
W/	WITH
WD	WOOD
WF	WIDE FLANGE
W/O	WITHOUT
WP	WATERPROOFING
WP	WORK POINT
WS	WATERSTOP
WT	WEIGHT
WWR	WELDED WIRE REINF

PLAN SYMBOLOGY

W12X72 BF1	COLUMN SIZE CALLOUT WITH BASE PLATE MARK
XX"-XX"	TOP OF SPREAD FOOTING
XXXX'-XX"	TOP OF WALL FOOTING ELEVATION
16"	TYPICAL MARK TO DENOTE STEP IN FOOTING LOCATION AND CHANGE IN ELEVATION VALUE. REFER TO TYPICAL FOOTING STEP DETAIL.
T/SLAB EL. = X'-X"	TYPICAL MARK TO DENOTE TOP OF SLAB ELEVATION
T/STEEL EL. = X'-X"	DENOTES TOP OF STEEL, JOIST BEARING (JBE), DECK BEARING (DBE), SLAB ELEVATION
	DENOTES DECK SPAN
	DENOTES DECK SPAN CHANGE
1/2"	DENOTES STEP IN SLAB OR DECK

Greenville
NORTH CAROLINA

JACOBS
333 Fayetteville Street, Suite 1100
Raleigh, NC 27601
PH: 919-334-3100 FX: 919-334-3122 www.jacobs.com
North Carolina Engineering Firm License No. F-287
North Carolina Architectural Firm Reg. No. 50757

AYERS SAINT GROSS

Consultants:
ARK Consulting Group, PLLC

Coaly Design
Landscape Architecture + Land Planning

Seals:

NORTH CAROLINA PROFESSIONAL SEAL 030518 ENGINEER TREVOR WINNELL

05/10/2016

General Notes:

Project Client:
CITY OF GREENVILLE

GREENVILLE TRANSPORTATION AND ACTIVITY CENTER
600 S. Pitt Street, Greenville, NC

Number	Description	Date
O	IFC	05/10/16

Key Plan: Project North

CAD File:

Project No.: L3005900

Copyright: 2015 Jacobs Engineering Group

Drawing Sheet Title:

GENERAL NOTES AND SPECIFICATIONS

Drawing Sheet Number:

S-002

Owner's Drawing Sheet No.:

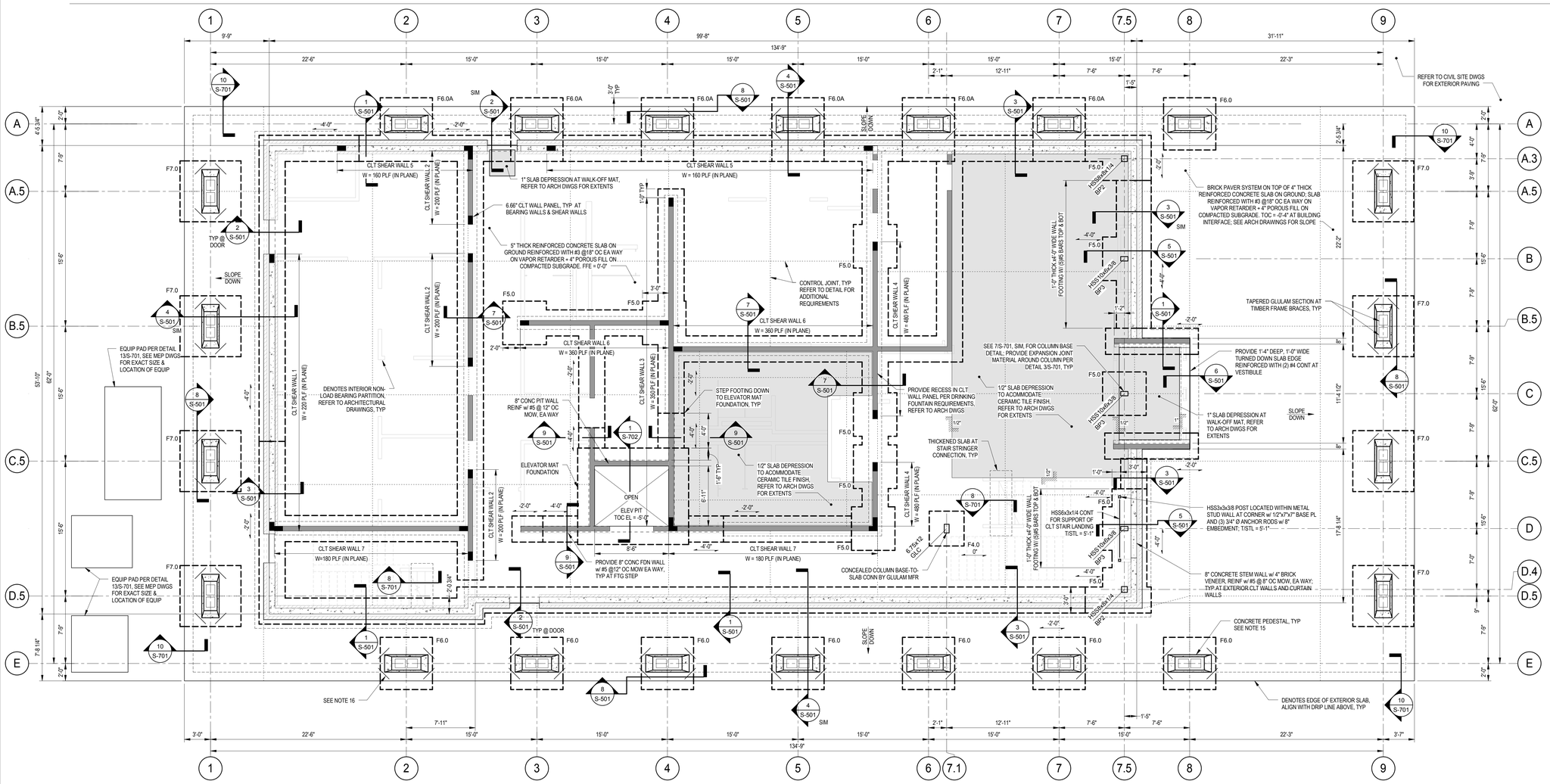

1 FOUNDATION PLAN

S-101 SCALE: 3/16" = 1'-0"

NOTES:

1. REFER TO GENERAL NOTES AND SPECIFICATIONS FOR ADDITIONAL STRUCTURAL INFORMATION.
2. ALL TOP OF FOOTING ELEVATIONS ARE MEASURED FROM THE TOP OF THE FLOOR SLAB; ELEVATION 0'-0". ALL TOP OF FOOTING ELEVATIONS ARE (-2'-0") UNLESS NOTED OTHERWISE.
3. COLUMNS, AS NOTED ON THIS DRAWINGS, SHALL RUN CONTINUOUSLY FROM THE FOUNDATION TO THE ROOF LEVEL, UNO.
4. ALL COLUMNS AND FOOTINGS SHALL BE CENTERED ON GRID LINES UNLESS NOTED OTHERWISE.
5. REFER TO PLAN FOR COLUMN SIZES AND BASEPLATE TYPES.
6. REFER TO SCHEDULES FOR TYPICAL SPREAD FOOTINGS.
7. PERIMETER COLUMN FOOTINGS ARE TO BE POURED MONOLITHICALLY WITH WALL FOOTINGS. REINFORCEMENT FOR WALL FOOTINGS SHALL RUN CONTINUOUSLY THROUGH COLUMN FOOTINGS.
8. STEEL COLUMNS SHALL BE SET ON TOP OF 2" OF GROUT ON TOP OF THE FOOTINGS AT THE ELEVATIONS SHOWN ON THIS PLAN. ALL BELOW GRADE BASE PLATES SHALL BE PROTECTED WITH 8" CONCRETE 3" CLEAR AROUND BASE PLATE, PER TYPICAL DETAIL.
9. REFER TO ARCHITECTURAL DRAWINGS FOR DIMENSIONS NOT SHOWN ON THIS DRAWING. INTERIOR CLT WALLS AND WALL FOOTINGS SHALL BE LOCATED PER THE ARCHITECTURAL DRAWINGS.
10. SLOPE ALL EXTERIOR SLABS AWAY FROM BUILDING AT A RATE OF 1/8" MIN PER FOOT FOR PROPER DRAINAGE, REFER TO CIVIL DRAWINGS.
11. REFER TO PLUMBING DRAWINGS FOR FLOOR DRAINS AND PIPING PENETRATIONS THROUGH THE FLOOR SLAB. REPORT ANY CONFLICTS WITH STRUCTURAL ELEMENTS OF SAID ITEMS TO JACOBS BEFORE CONSTRUCTION.
12. REFER TO ARCHITECTURAL PLANS FOR LOCATION OF FLOOR FINISHES, AND AREAS REQUIRING SLOPED OR DEPRESSED SLABS.
13. STEP WALL FOOTINGS AS REQUIRED TO CLEAR UTILITIES, SEE THE "TYPICAL STEPPED FOOTING DETAIL." MAXIMUM UNBALANCED FILL SHALL NOT EXCEED 2'-0". CONFIRM FOOTING LOCATIONS WITH JACOBS.
14. "PP" INDICATES CONCRETE PEDESTAL, REFER TO DETAIL 11/S-701 FOR SIZE AND REINFORCING.
15. TOP OF PEDESTAL ELEVATION = +1'-0" ABOVE FFE UNO.
16. PROVIDE (2) No. 3 BARS x 2'-6" LONG CENTERED IN SLAB AT ALL RE-ENTRANT CORNERS AND ON ALL SIDES OF STEEL COLUMNS. REFER TO DETAIL 2/S-701.
17. ■ INDICATES HOLDOWN ZONE FOR CLT SHEAR WALLS. REFER TO HOLDOWN SCHEDULE FOR HOLDOWN REQUIREMENTS.

SPREAD FOOTING SCHEDULE

MARK	PLAN SIZE		THICKNESS	REINFORCING	
	L	W		BOTTOM	TOP
F4.0	4'-0"	4'-0"	1'-0"	(5) No. 5 EA WAY	N/A
F5.0	5'-0"	5'-0"	1'-0"	(6) No. 5 EA WAY	(6) No. 5 EA WAY
F6.0	6'-0"	6'-0"	1'-6"	(7) No. 5 EA WAY	(7) No. 5 EA WAY
F6.0A	6'-0"	7'-3 3/4"	1'-6"	(7) No. 5 EA WAY	(7) No. 5 EA WAY
F7.0	7'-0"	7'-0"	1'-6"	(7) No. 6 EA WAY	(7) No. 6 EA WAY

NOTES:

1. SEE FOUNDATION PLAN FOR TOP OF FOOTING ELEVATION (TOF), TYPICAL, UNO
2. SPACE REINFORCING BARS EQUALLY THROUGH OUT FOOTING.
3. BOTTOM STEEL SHALL BE PLACED 3" CLEAR FROM THE BOTTOM OF THE FOOTING.
4. TOP STEEL SHALL BE PLACED 2" CLEAR FROM THE TOP OF THE FOOTING.

SHEAR WALL HOLDOWN SCHEDULE

CLT SHEAR WALL #	MAXIMUM NET UPLIFT FORCE (LBS)	HOLDOWN CONNECTION TYPE
1	N/A	CONCEALED
2	500	EXPOSED
3	N/A	EXPOSED
4	4300	EXPOSED
5	500	CONCEALED
6	3700	EXPOSED
7	N/A	EXPOSED

NOTES:

1. HOLDOWN CONNECTIONS TO BE DESIGNED BY THE CLT MANUFACTURER FOR THE MAXIMUM UPLIFT FORCES GIVEN IN THIS SCHEDULE.
2. FORCES SHOWN ARE BASED ON THE CONTROLLING LOAD COMBINATION 0.6D"W. THE FACTORED DEAD LOAD HAS ALREADY BEEN ACCOUNTED FOR AND SHOULD NOT BE DUPLICATED.
3. CONNECTION TYPES SPECIFIED AS "CONCEALED" ARE INTENDED TO BE KNIFE PLATE CONNECTIONS LOCATED IN THE MIDDLE OF THE CLT WALL PANEL WITH FASTENERS BEING COUNTERSUNK INTO THE CLT PANEL. SEE DETAILS 4 & 5/S-711
4. THE CENTERLINE OF ALL HOLDOWN ANCHORS IS TO BE LOCATED WITHIN 1'-0" OF THE SPECIFIED SHEAR WALL EDGE.

Greenville NORTH CAROLINA

JACOBS

333 Fayetteville Street, Suite 1100
Raleigh, NC 27601
PH: 919-334-3100 FX: 919-334-3122 www.jacobs.com
North Carolina Engineering Firm License No. F-287
North Carolina Architectural Firm Reg. No. 50757

AYERS SAINT GROSS

Consultants:

ARK Consulting Group, PLLC

Coaly Design
Landscape Architecture + Land Planning

Seals:

NORTH CAROLINA PROFESSIONAL SEAL 030518 ENGINEER TREVOR W. NINELL

05/10/2016

General Notes:

Project Client:

CITY OF GREENVILLE

GREENVILLE TRANSPORTATION AND ACTIVITY CENTER
600 S. Pitt Street, Greenville, NC

Number	Description	Date
0	IFC	05/10/16

Key Plan:

Project North

CAD File:

Project No.: L3005900

Copyright: 2015 Jacobs Engineering Group

Drawing Sheet Title:

FOUNDATION PLAN

Drawing Sheet Number:

S-101

Owner's Drawing Sheet No.:

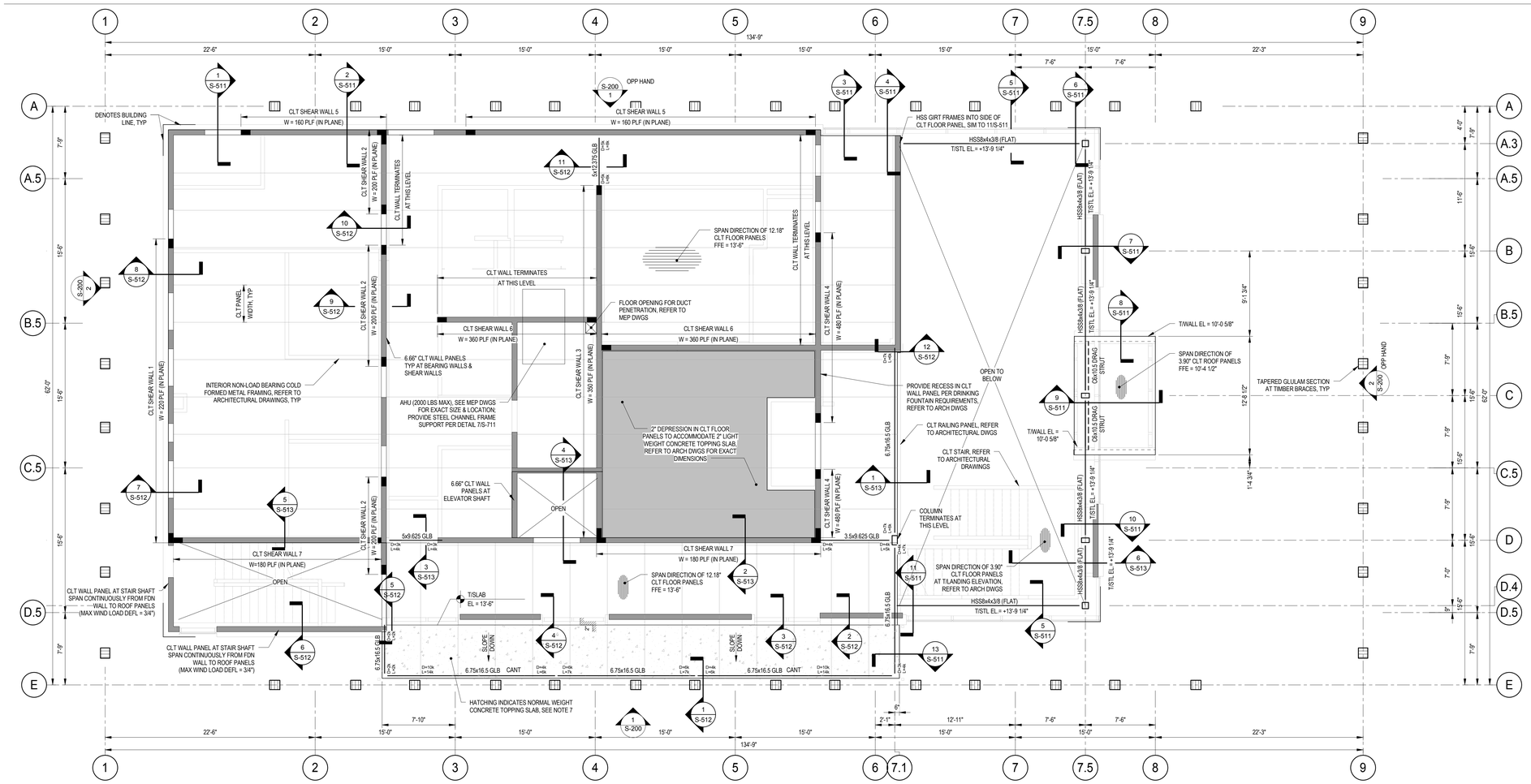

1 SECOND FLOOR FRAMING PLAN

S-102 SCALE: 3/16" = 1'-0"

NOTES:

1. REFER TO GENERAL NOTES AND SPECIFICATIONS FOR ADDITIONAL STRUCTURAL INFORMATION.
2. FINISH FLOOR ELEVATION = +13'-6" FROM REFERENCE ELEVATION 0'-0" UNO.
3. TOP OF WALL ELEVATION FOR ALL CLT WALL PANELS = -12.18" FROM FFE UNO. CLT WALL PANELS FRAME TO UNDERSIDE OF CLT FLOOR PANELS.
4. CLT FLOOR PANELS TO BEAR DIRECTLY ON TOP OF CLT WALL PANELS OR GLULAM BEAMS UNO.
5. TOP OF GLULAM BEAM ELEVATION = -12.18" FROM FFE FOR ALL GLULAM BEAMS UNO.
6. "GLB" INDICATES GLULAM BEAM SECTION.
7. ☐ INDICATES NORMAL WEIGHT CONCRETE TOPPING SLAB REINFORCED WITH WWR 6x6-W1.4xW1.4. TOPPING SLAB SLOPES AWAY FROM STRUCTURE WITH A MAXIMUM THICKNESS OF 2 1/2"; REFER TO ARCHITECTURAL DRAWINGS FOR SLOPE.
8. REFER TO FOUNDATION PLAN FOR COLUMN SIZES.
9. ALL ENGINEERED LUMBER ELEMENTS (GLULAM AND CLT) SHOWN ON THIS DRAWING SHALL BE DESIGNED BY A LICENSED PROFESSIONAL ENGINEER REGISTERED IN THE STATE OF NORTH CAROLINA. ALL CONNECTIONS OF ENGINEERED LUMBER ELEMENTS SHALL BE DESIGNED AND CERTIFIED BY ENGINEERED LUMBER DESIGNER. REFER TO ENGINEERED LUMBER NOTES ON SHEET S-002.
10. ■ INDICATES HOLDOWN ZONE FOR CLT SHEAR WALLS. REFER TO HOLDOWN SCHEDULE FOR HOLDOWN REQUIREMENTS.
11. CONTRACTOR SHALL SUBMIT WALL ELEVATIONS w/ CLT SHOP DRAWINGS DETAILING OPENING SIZE AND LOCATIONS FOR ALL WALL OPENINGS. REFER TO ARCH AND MEP DRAWINGS.
12. REFER TO ARCHITECTURAL DRAWINGS FOR SIZE AND LOCATION OF ALL OPENINGS IN CLT WALL PANELS.
13. REFER TO ARCHITECTURAL DRAWINGS FOR ALL DIMENSIONS THAT ARE NOT SHOWN ON THIS PLAN.

SHEAR WALL HOLDOWN SCHEDULE

CLT SHEAR WALL #	MAXIMUM NET UPLIFT FORCE (LBS)	HOLDOWN CONNECTION TYPE
1	N/A	CONCEALED
2	500	EXPOSED
3	N/A	EXPOSED
4	4300	EXPOSED
5	500	CONCEALED
6	3700	EXPOSED
7	N/A	EXPOSED

NOTES:

1. HOLDOWN CONNECTIONS TO BE DESIGNED BY THE CLT MANUFACTURER FOR THE MAXIMUM UPLIFT FORCES GIVEN IN THIS SCHEDULE.
2. FORCES SHOWN ARE BASED ON THE CONTROLLING LOAD COMBINATION 0.6D*W. THE FACTORED DEAD LOAD HAS ALREADY BEEN ACCOUNTED FOR AND SHOULD NOT BE DUPLICATED.
3. CONNECTION TYPES SPECIFIED AS "CONCEALED" ARE INTENDED TO BE KNIFE PLATE CONNECTIONS LOCATED IN THE MIDDLE OF THE CLT WALL PANEL WITH FASTENERS BEING COUNTERSUNK INTO THE CLT PANEL. SEE DETAILS 4 & 5/S-711
4. THE CENTERLINE OF ALL HOLDOWN ANCHORS IS TO BE LOCATED WITHIN 1'-0" OF THE SPECIFIED SHEAR WALL EDGE.
5. PROVIDE (2) ADDITIONAL #4 DOWELS AT ALL SHEAR WALL HOLDOWN LOCATIONS, SEE DETAIL 7/S-501.

Greenville
NORTH CAROLINA

JACOBS
333 Fayetteville Street, Suite 1100
Raleigh, NC 27601
PH: 919-334-3100 FX: 919-334-3122 www.jacobs.com
North Carolina Engineering Firm License No. F-287
North Carolina Architectural Firm Reg. No. 50757

AYERS SAINT GROSS

Consultants:
ARK Consulting Group, PLLC

Coaly Design
Landscape Architecture + Land Planning

Seals:

NORTH CAROLINA PROFESSIONAL SEAL 030518 ENGINEER TREVOR WINNELL

05/10/2016

General Notes:

Project Client:
CITY OF GREENVILLE

GREENVILLE TRANSPORTATION AND ACTIVITY CENTER
600 S. Pitt Street, Greenville, NC

Number	Description	Date
0	IFC	05/10/16

Key Plan:

Project North

CAD File:

Project No.: L3005900

Copyright: 2015 Jacobs Engineering Group

Drawing Sheet Title:

SECOND FLOOR FRAMING PLAN

Drawing Sheet Number:

S-102

Owner's Drawing Sheet No.:

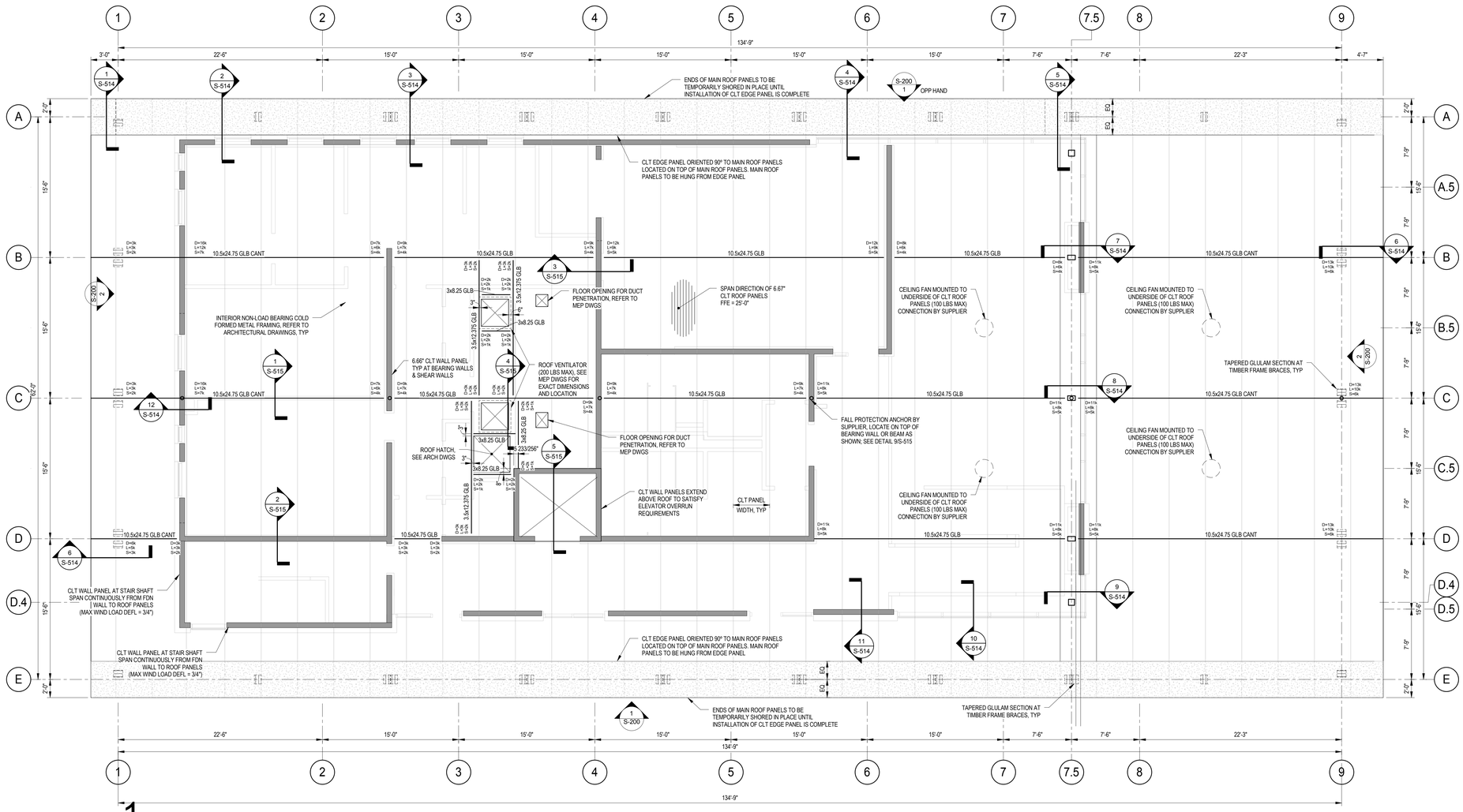

1 ROOF FRAMING PLAN

S-103 SCALE: 3/16" = 1'-0"

NOTES:

1. REFER TO GENERAL NOTES AND SPECIFICATIONS FOR ADDITIONAL STRUCTURAL INFORMATION.
2. REFER TO FOUNDATION PLAN FOR COLUMN SIZES.
3. ROOFS ARE DESIGNED FOR THE UNIFORMLY DISTRIBUTED LOADS SHOWN ON THE CONSTRUCTION SPECIFICATIONS. SPECIAL LOADING CONDITIONS MUST BE REPORTED TO JACOBS. ALL NONSTANDARD LOADS ARE NOTED ON THE DESIGN DOCUMENTS. JACOBS NOT RESPONSIBLE FOR DEFECTS RESULTING FROM UNREPORTED CONDITIONS MITIGATING THE ABOVE ASSUMPTIONS.
4. TOP OF CLT ROOF PANEL ELEVATION = +25'-0" FROM REFERENCE ELEVATION 0'-0". ROOF DRAINAGE TO BE ACHIEVED BY USE OF TAPERED INSULATION (9 1/2" MAXIMUM THICKNESS, 3 PSF TOTAL WEIGHT).
5. TOP OF WALL ELEVATION = -6.66" FROM TOP OF ROOF PANEL ELEVATION FOR ALL WALL PANELS UNO.
6. CLT ROOF PANELS TO BEAR DIRECTLY ON TOP OF CLT WALL PANELS OR GLULAM BEAMS UNO.
7. TOP OF GLULAM BEAM ELEVATION = -6.66" FROM TOP OF ROOF PANEL ELEVATION FOR ALL GLULAM BEAMS UNO.
8. "GLB" INDICATES GLULAM BEAM SECTION.
9. CLT ROOF PANELS, GLULAM BEAMS, AND THEIR CONNECTIONS SHALL BE DESIGNED FOR A MAXIMUM NET WIND UPLIFT LOAD OF 32 PSF.
10. ALL ENGINEERED LUMBER ELEMENTS (GLULAM AND CLT) SHOWN ON THIS DRAWING SHALL BE DESIGNED BY A LICENSED PROFESSIONAL REGISTERED IN THE STATE OF NORTH CAROLINA. ALL CONNECTIONS OF ENGINEERED LUMBER ELEMENTS SHALL BE DESIGNED AND CERTIFIED BY ENGINEERED LUMBER DESIGNER. REFER TO ENGINEERED LUMBER NOTES ON SHEET S-002.
11. COORD LOCATION AND BOTTOM OF STEEL ELEVATION WITH ELEVATOR MANUFACTURER TO MEET OVERRUN REQUIREMENTS.

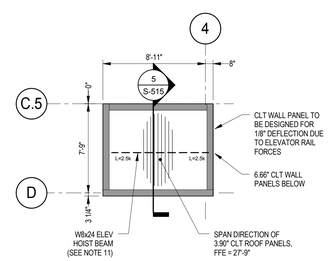

2 ELEVATOR OVERRUN FRAMING PLAN

S-103 SCALE: 3/16" = 1'-0"

Greenville NORTH CAROLINA

JACOBS

333 Fayetteville Street, Suite 1100
Raleigh, NC 27601
PH: 919-334-3100 FX: 919-334-3122 www.jacobs.com
North Carolina Engineering Firm License No. F-287
North Carolina Architectural Firm Reg. No. 50757

AYERS SAINT GROSS

Consultants:

ARK Consulting Group, PLLC

Coaly Design
Landscape Architecture + Land Planning

Seals:

NORTH CAROLINA PROFESSIONAL SEAL 030518 ENGINEER TREVOR WINNELL

05/10/2016

General Notes:

Project Client:

CITY OF GREENVILLE

GREENVILLE TRANSPORTATION AND ACTIVITY CENTER

600 S. Pitt Street, Greenville, NC

Number	Description	Date
0	IFC	05/10/16

Key Plan:

Project North

CAD File:

Project No.: L3005900

Copyright: 2015 Jacobs Engineering Group

Drawing Sheet Title:

ROOF FRAMING PLAN

Drawing Sheet Number:

S-103

Owner's Drawing Sheet No.:

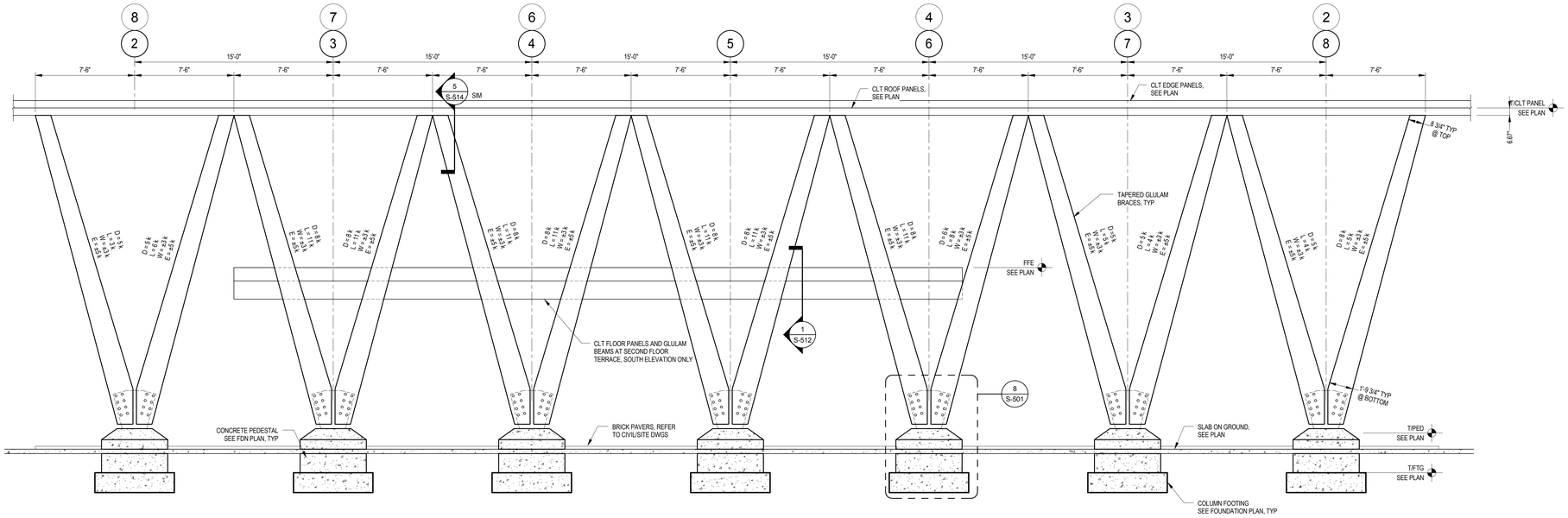

1 NORTH & SOUTH ELEVATIONS

S-200 SCALE: 1/4" = 1'-0"

NOTES:
1. SEE GENERAL AND SPECIFICATIONS FOR ADDITIONAL INFORMATION.
2. LOADS INDICATED ON THIS PLAN REPRESENT SERVICE LEVEL LOAD CASES AND ARE UNFACTORED.
3. CLT AND GLULAM MANUFACTURERS SHALL DESIGN ALL CLT ROOF PANELS, GLULAM FRAMING, AND ALL CONNECTIONS BASED ON THE LOADS PROVIDED. CONNECTIONS SHALL ALSO BE DESIGNED FOR THE OUT-OF-PLANE LOADING DUE TO WIND PER LOADING REQUIREMENTS SHOWN ON SHEET S-001.

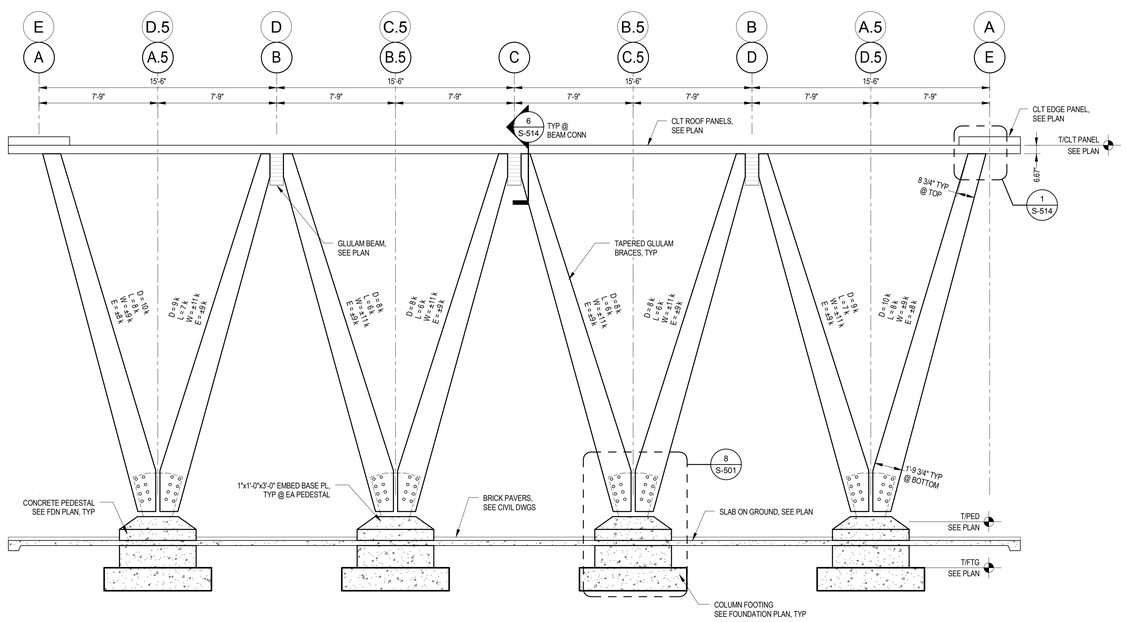

2 EAST & WEST ELEVATIONS

S-200 SCALE: 1/4" = 1'-0"

NOTES:
1. SEE GENERAL AND SPECIFICATIONS FOR ADDITIONAL INFORMATION.
2. LOADS INDICATED ON THIS PLAN REPRESENT SERVICE LEVEL LOAD CASES AND ARE UNFACTORED.
3. CLT AND GLULAM MANUFACTURERS SHALL DESIGN ALL CLT ROOF PANELS, GLULAM FRAMING, AND ALL CONNECTIONS BASED ON THE LOADS PROVIDED. CONNECTIONS SHALL ALSO BE DESIGNED FOR THE OUT-OF-PLANE LOADING DUE TO WIND PER LOADING REQUIREMENTS SHOWN ON SHEET S-001.

Greenville
NORTH CAROLINA

JACOBS
333 Fayetteville Street, Suite 1100
Raleigh, NC 27601
PH: 919-334-3100 FX: 919-334-3122 www.jacobs.com
North Carolina Engineering Firm License No. F-287
North Carolina Architectural Firm Reg. No. 50757

AYERS SAINT GROSS

Consultants:
ARK Consulting Group, PLLC
Coaly Design
Landscape Architecture + Land Planning

Seals:

NORTH CAROLINA PROFESSIONAL SEAL 030518 ENGINEER TREVOR WINNELL

05/10/2016

General Notes:

Project Client:
CITY OF GREENVILLE

GREENVILLE TRANSPORTATION AND ACTIVITY CENTER

600 S. Pitt Street, Greenville, NC

Number	Description	Date
0	IFC	05/10/16

Key Plan: Project North

CAD File:
Project No.: L3005900
Copyright: 2015 Jacobs Engineering Group

Drawing Sheet Title:
LATERAL FRAME ELEVATIONS

Drawing Sheet Number:
S-200

Owner's Drawing Sheet No.:

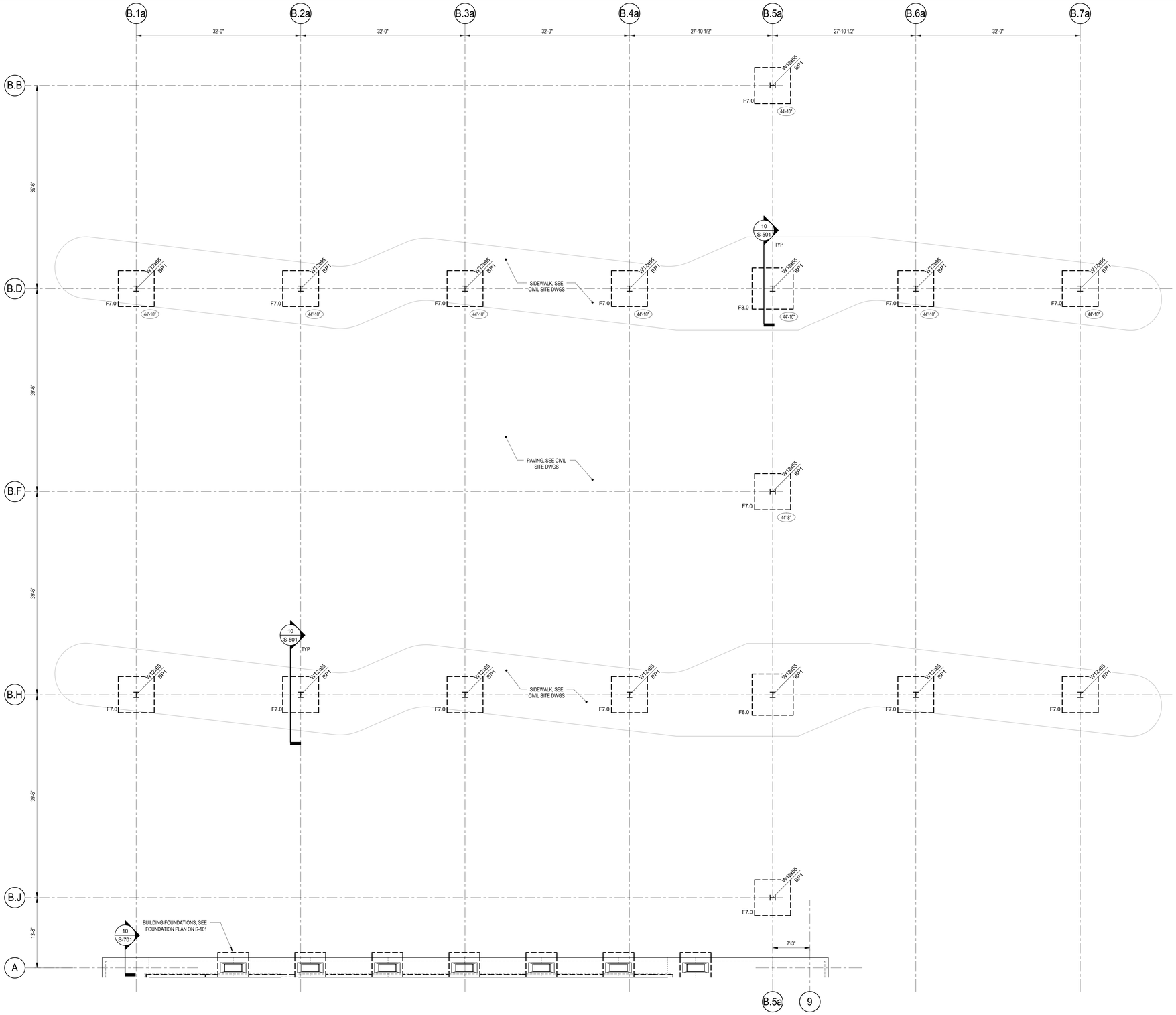

1 BUS BAY FOUNDATION PLAN

S-301 SCALE: 1/8" = 1'-0"

NOTES:

1. REFER TO GENERAL NOTES AND SPECIFICATIONS FOR ADDITIONAL STRUCTURAL INFORMATION.
2. ALL TOP OF FOOTING ELEVATIONS ARE AT ELEVATION SHOWN. REFER TO CIVIL/SITE DRAWINGS FOR DATUM INFORMATION. ALL TOP OF FOOTING ELEVATIONS ARE (44'-0") UNLESS NOTED OTHERWISE.
3. COLUMNS, AS NOTED ON THIS DRAWINGS, SHALL RUN CONTINUOUSLY FROM THE FOUNDATION TO THE BUS BAY ROOF LEVEL, UNO.
4. ALL COLUMNS AND FOOTINGS SHALL BE CENTERED ON GRID LINES UNLESS NOTED OTHERWISE.
5. REFER TO SHEET 12/S-701 FOR BASEPLATE SCHEDULE.
6. REFER TO SCHEDULES FOR TYPICAL SPREAD FOOTINGS.
7. STEEL COLUMNS SHALL BE SET ON TOP OF 2" OF GROUT ON TOP OF THE FOOTINGS AT THE ELEVATIONS SHOWN ON THIS PLAN. ALL BELOW GRADE BASE PLATES SHALL BE PROTECTED WITH 8" CONCRETE 3" CLEAR AROUND BASE PLATE. PER TYPICAL DETAIL.
8. REFER TO ARCHITECTURAL DRAWINGS FOR DIMENSIONS NOT SHOWN ON THIS DRAWING.
9. REFER TO CIVIL SITE DRAWINGS FOR ALL CURB, SIDEWALK, AND GRADING INFORMATION.
10. ALL STEEL TO BE HOT-DIPPED GALVANIZED.
11. ALL STEEL AND CONNECTIONS SHALL MEET THE REQUIREMENTS OF ARCHITECTURALLY EXPOSED STRUCTURAL STEEL (AESS). SEE SPECIFICATIONS.

BUS BAY SPREAD FOOTING SCHEDULE

MARK	PLAN SIZE		THICKNESS	REINFORCING	
	L	W		BOTTOM	TOP
F7.0	7'-0"	7'-0"	1'-6"	(7) No. 6 EA WAY	(7) No. 6 EA WAY
F8.0	8'-0"	8'-0"	2'-0"	(10) No. 6 EA WAY	(10) No. 6 EA WAY

Greenville
NORTH CAROLINA

JACOBS
333 Fayetteville Street, Suite 1100
Raleigh, NC 27601
PH: 919-334-3100 FX: 919-334-3122 www.jacobs.com
North Carolina Engineering Firm License No. F-287
North Carolina Architectural Firm Reg. No. 50757

AYERS SAINT GROSS

Consultants:

ARK Consulting Group, PLLC

Coaly Design
Landscape Architecture + Land Planning

Seals:

NORTH CAROLINA PROFESSIONAL SEAL 030518 ENGINEER TREVOR WINNELL

05/10/2016

General Notes:

Project Client:
CITY OF GREENVILLE

GREENVILLE TRANSPORTATION AND ACTIVITY CENTER
600 S. Pitt Street, Greenville, NC

Number	Description	Date
0	IFC	05/10/16

Key Plan:

Project North

CAD File:

Project No.: L3005900

Copyright: 2015 Jacobs Engineering Group

Drawing Sheet Title:

BUS BAY FOUNDATION PLAN

Drawing Sheet Number:

S-301

Owner's Drawing Sheet No.:

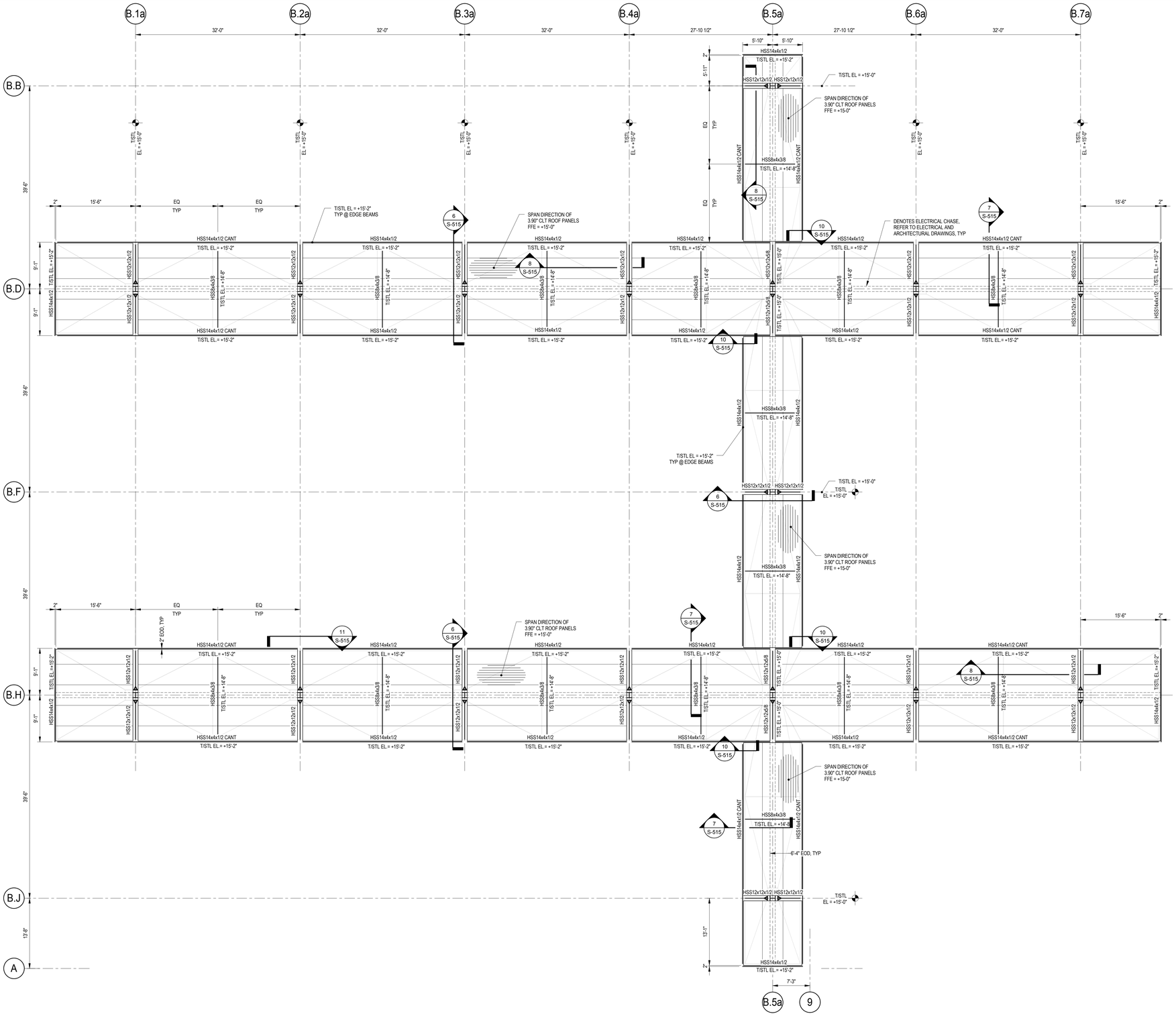

1 BUS BAY FRAMING PLAN

S-302 SCALE: 1/8" = 1'-0"

NOTES:

1. REFER TO GENERAL NOTES AND SPECIFICATIONS FOR ADDITIONAL STRUCTURAL INFORMATION.
2. REFER TO FOUNDATION PLAN FOR COLUMN SIZES.
3. ROOFS ARE DESIGNED FOR THE UNIFORMLY DISTRIBUTED LOADS SHOWN ON THE CONSTRUCTION SPECIFICATIONS. SPECIAL LOADING CONDITIONS MUST BE REPORTED TO JACOBS. ALL NONSTANDARD LOADS ARE NOTED ON THE DESIGN DOCUMENTS. JACOBS NOT RESPONSIBLE FOR DEFECTS RESULTING FROM UNREPORTED CONDITIONS MITIGATING THE ABOVE ASSUMPTIONS.
4. SEE PLAN FOR FINISH FLOOR ELEVATION MEASURED FROM BUILDING FINISH FLOOR ELEVATION, REFERENCE ELEVATION 0'-0" UNO.
5. TOP OF STEEL COLUMN ELEVATION = -1'-0" FROM FINISH FLOOR ELEVATION INDICATED ON PLAN.
6. ALL STEEL AND CONNECTIONS SHALL MEET THE REQUIREMENTS OF ARCHITECTURALLY EXPOSED STRUCTURAL STEEL (AESS). SEE SPECIFICATIONS.
7. ALL CANOPY STEEL TO BE HOT-DIPPED GALVANIZED.
8. PROVIDE 1/4" CAP PLATE TO ALL EXPOSED ENDS OF HSS FRAMING.

Greenville NORTH CAROLINA

JACOBS

333 Fayetteville Street, Suite 1100
Raleigh, NC 27601
PH: 919-334-3100 FX: 919-334-3122 www.jacobs.com
North Carolina Engineering Firm License No. F-287
North Carolina Architectural Firm Reg. No. 50757

AYERS SAINT GROSS

Consultants:

ARK Consulting Group, PLLC

Coaly Design
Landscape Architecture + Land Planning

Seals:

NORTH CAROLINA PROFESSIONAL SEAL 030518 ENGINEER TREVOR WINNIEL

05/10/2016

General Notes:

Project Client:

CITY OF GREENVILLE

GREENVILLE TRANSPORTATION AND ACTIVITY CENTER
600 S. Pitt Street, Greenville, NC

Number	Description	Date
O	IFC	05/10/16

Key Plan:

Project North

CAD File:

Project No.: L3005900

Copyright: 2015 Jacobs Engineering Group

Drawing Sheet Title:

BUS BAY FRAMING PLAN

Drawing Sheet Number:

S-302

Owner's Drawing Sheet No.:

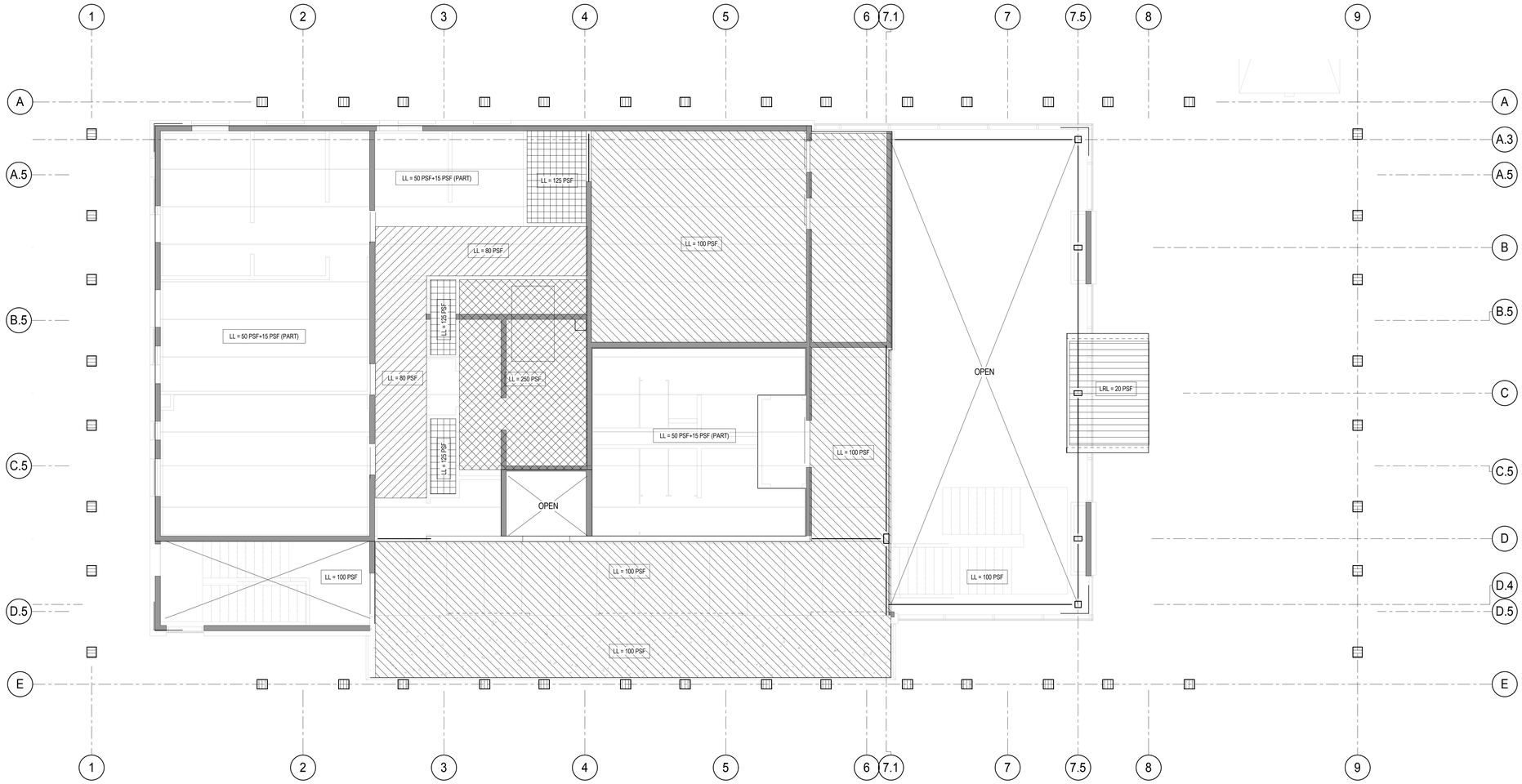

1 CLT PANEL UNIFORM LOADING PLAN - SECOND FLOOR

S-401

SCALE: 3/16" = 1'-0"

NOTES:

1. SEE GENERAL NOTES FOR ALL DESIGN CRITERIA AND ADDITIONAL DESIGN LOAD INFORMATION.
2. LOADS INDICATED ON THIS PLAN REPRESENT SERVICE LEVEL LIVE LOADS AND ARE UNFACTORED. SEE S-001 FOR DESIGN DEAD LOAD VALUES TO BE USED IN COMBINATION WITH THE LIVE LOADS INDICATED ON THIS PLAN FOR DESIGN OF ALL CLT, GLULAM FRAMING, AND CONNECTIONS.
3. CLT AND GLULAM MANUFACTURERS SHALL DESIGN ALL CLT FLOOR PANELS, GLULAM FRAMING, AND ALL CONNECTIONS BASED ON THE LOADS PROVIDED.

Greenville
NORTH CAROLINA

JACOBS
333 Fayetteville Street, Suite 1100
Raleigh, NC 27601
PH: 919-334-3100 FX: 919-334-3122 www.jacobs.com
North Carolina Engineering Firm License No. F-287
North Carolina Architectural Firm Reg. No. 50757

AYERS SAINT GROSS

Consultants:

ARK Consulting Group, PLLC

Coaly Design
Landscape Architecture + Land Planning

Seals:

NORTH CAROLINA PROFESSIONAL SEAL 030518 ENGINEER TREVOR WINNELL

05/10/2016

General Notes:

Project Client:
CITY OF GREENVILLE

GREENVILLE TRANSPORTATION AND ACTIVITY CENTER
600 S. Pitt Street, Greenville, NC

Number	Description	Date
0	IFC	05/10/16

Key Plan:

Project North

CAD File:

Project No.: L3005900

Copyright: 2015 Jacobs Engineering Group

Drawing Sheet Title:

SECOND FLOOR LOADING PLAN

Drawing Sheet Number:

S-401

Owner's Drawing Sheet No.:

1 CLT PANEL UNIFORM LOADING PLAN - ROOF

S-402 SCALE: 3/16" = 1'-0"

NOTES:

1. SEE GENERAL NOTES FOR ALL DESIGN CRITERIA AND ADDITIONAL DESIGN LOAD INFORMATION.
2. LOADS INDICATED ON THIS PLAN REPRESENT SERVICE LEVEL LIVE LOADS AND ARE UNFACTORED.
3. WIND UPLIFT LOADS INDICATED ON THIS PLAN REPRESENT NET WIND UPLIFT VALUES.
4. CLT AND GLULAM MANUFACTURERS SHALL DESIGN ALL CLT ROOF PANELS, GLULAM FRAMING, AND ALL CONNECTIONS BASED ON THE LOADS PROVIDED.

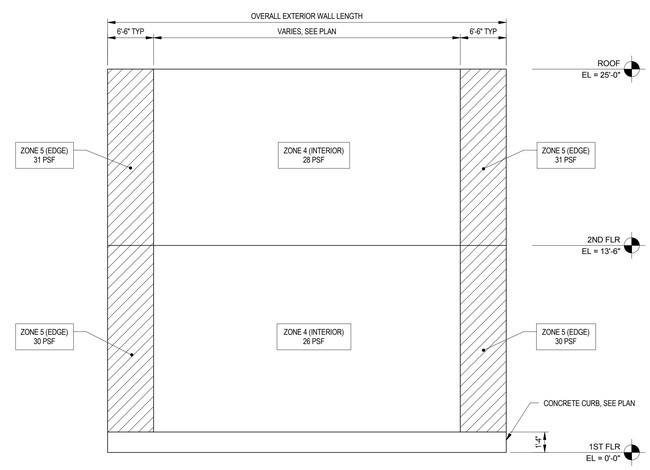

2 OUT-OF-PLANE WIND LOADING AT EXTERIOR WALLS

S-402 SCALE: 1/4" = 1'-0"

NOTE:

1. SEE GENERAL NOTES FOR ALL DESIGN CRITERIA AND ADDITIONAL DESIGN LOAD INFORMATION.
2. CLT MANUFACTURER SHALL DESIGN ALL CLT WALL PANELS AND CONNECTIONS BASED ON THE LOADS PROVIDED.
3. THIS LOADING DIAGRAM REPRESENTS THE OUT-OF-PLANE COMPONENTS AND CLADDING WIND LOADS ACTING ON THE EXTERIOR WALLS OF THE BUILDING. LOADS INDICATED ON THIS ELEVATION REPRESENT SERVICE LEVEL LOADS AND ARE UNFACTORED.
4. THE LOADS SHOWN ARE BASED ON AN EFFECTIVE WIND AREA EQUAL TO STORY HEIGHT*(STORY HEIGHT/3) AS SET FORTH IN ASCE 7-05.
5. REFER TO ARCHITECTURAL DRAWINGS FOR ALL WINDOW AND DOOR OPENINGS.

Greenville
NORTH CAROLINA

JACOBS
333 Fayetteville Street, Suite 1100
Raleigh, NC 27601
PH: 919-334-3100 FX: 919-334-3122 www.jacobs.com
North Carolina Engineering Firm License No. F-287
North Carolina Architectural Firm Reg. No. 50757

AYERS SAINT GROSS

Consultants:

ARK Consulting Group, PLLC

Coaly Design
Landscape Architecture + Land Planning

Seals:

NORTH CAROLINA PROFESSIONAL SEAL 030518 ENGINEER TREVOR WINNELL

05/10/2016

General Notes:

Project Client:
CITY OF GREENVILLE

GREENVILLE TRANSPORTATION AND ACTIVITY CENTER
600 S. Pitt Street, Greenville, NC

Number	Description	Date
O	IFC	05/10/16

Key Plan:

Project North

CAD File:

Project No.: L3005900

Copyright: 2015 Jacobs Engineering Group

Drawing Sheet Title:

ROOF LOADING PLAN & WALL LOADING DIAGRAM

Drawing Sheet Number:

S-402

Owner's Drawing Sheet No.:

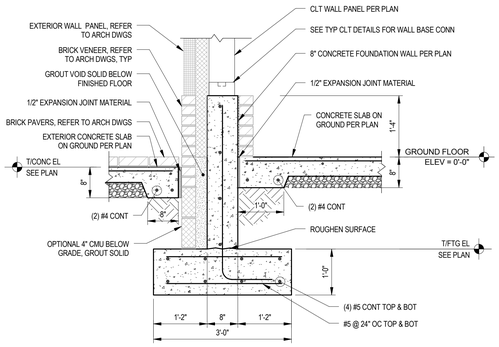

1 FOUNDATION WALL AT METAL PANEL

S-501 SCALE: 3/4" = 1'-0"

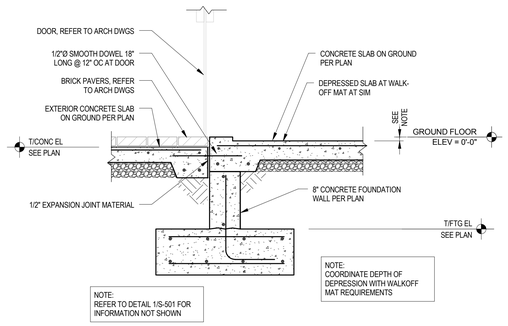

2 FOUNDATION WALL AT EXTERIOR DOOR

S-501 SCALE: 3/4" = 1'-0"

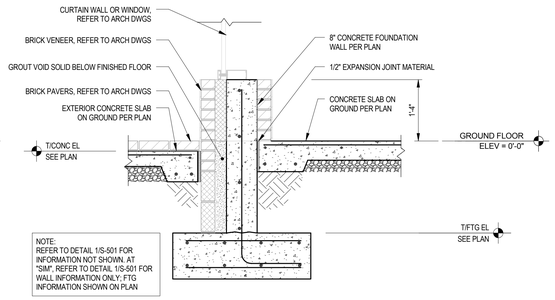

3 FOUNDATION WALL AT CURTAIN WALL OR WINDOW

S-501 SCALE: 3/4" = 1'-0"

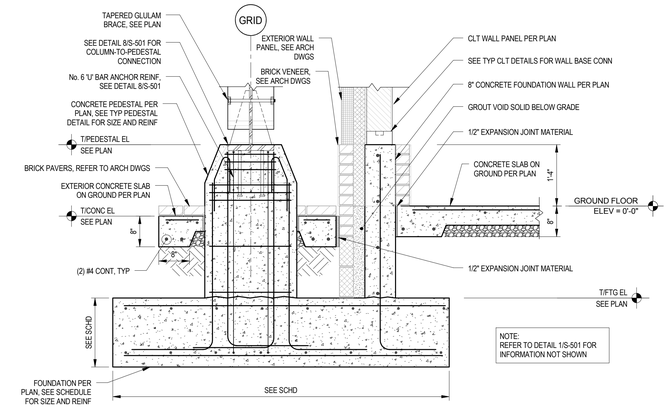

4 GLULAM BRACE PEDESTAL AT FOUNDATION WALL

S-501 SCALE: 3/4" = 1'-0"

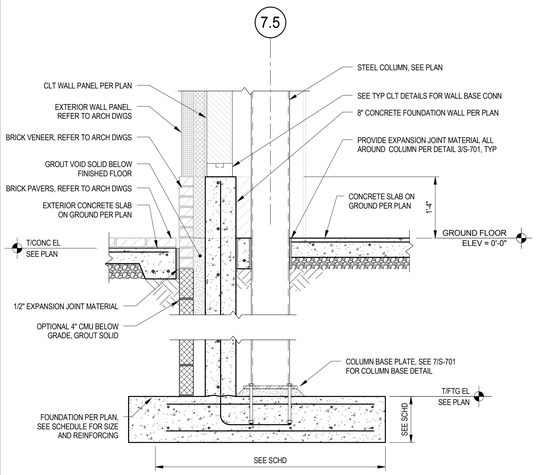

5 STEEL COLUMN FOOTING AT FOUNDATION WALL

S-501 SCALE: 3/4" = 1'-0"

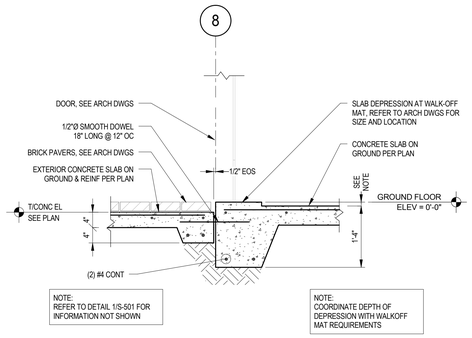

6 SLAB TRANSITION AT ENTRY VESTIBULE

S-501 SCALE: 3/4" = 1'-0"

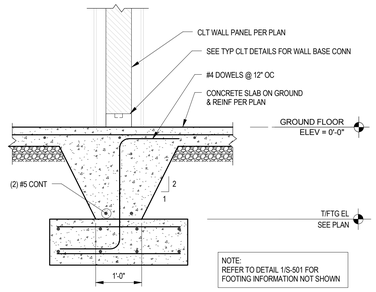

NOTE:
1. PROVIDE ALTERNATE CONCEALED WALL-TO-FLOOR CONNECTION PER DETAIL 5/S-711 AT LOCATIONS WHERE BASE OF CLT WALL IS EXPOSED. REFER TO ARCHITECTURAL DRAWINGS.
2. AT SHEAR WALL HOLDOWN LOCATIONS, PROVIDE (2) ADDITIONAL #4 DOWELS TYP

7 SECTION AT INTERIOR CLT WALL BASE

S-501 SCALE: 3/4" = 1'-0"

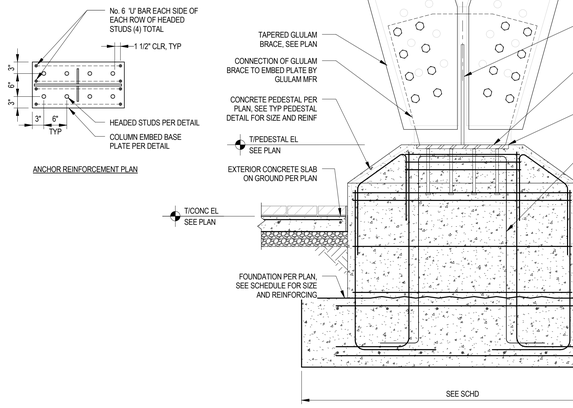

8 GLULAM BRACE PEDESTAL DETAIL

S-501 SCALE: 3/4" = 1'-0"

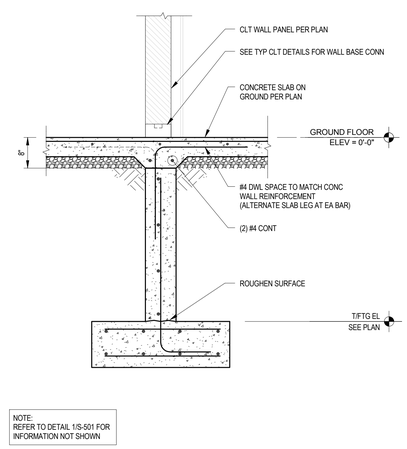

9 FOUNDATION WALL AT INTERIOR CLT WALL

S-501 SCALE: 3/4" = 1'-0"

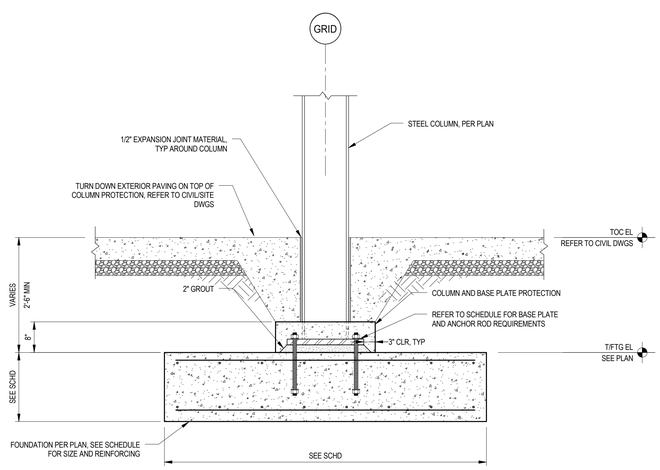

10 TYPICAL COLUMN FOOTING AT BUS CANOPY

S-501 SCALE: 3/4" = 1'-0"

Greenville NORTH CAROLINA

JACOBS
333 Fayetteville Street, Suite 1100
Raleigh, NC 27601
PH: 919-334-3100 FX: 919-334-3122 www.jacobs.com
North Carolina Engineering Firm License No. F-287
North Carolina Architectural Firm Reg. No. 50757

AYERS SAINT GROSS

Consultants:

ARK Consulting Group, PLLC

Coaly Design
Landscape Architecture + Land Planning

Seals:

NORTH CAROLINA PROFESSIONAL SEAL 030518 ENGINEER TREVOR W. INNELL

05/10/2016

General Notes:

Project Client:
CITY OF GREENVILLE

GREENVILLE TRANSPORTATION AND ACTIVITY CENTER
600 S. Pitt Street, Greenville, NC

Number	Description	Date
0	IFC	05/10/16

Key Plan: Project North

CAD File:
Project No.: L3005900
Copyright: 2015 Jacobs Engineering Group

Drawing Sheet Title:
FOUNDATION SECTIONS & DETAILS

Drawing Sheet Number:
S-501

Owner's Drawing Sheet No.:

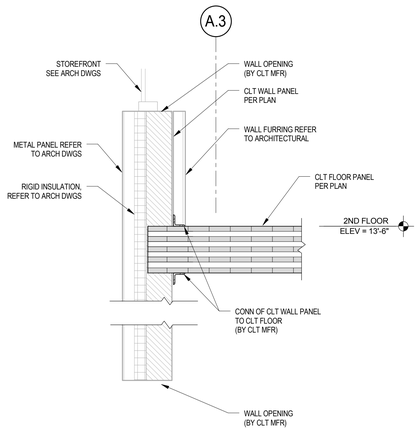

1 CLT FRAMING AT WINDOW
S-511 SCALE: 3/4" = 1'-0"

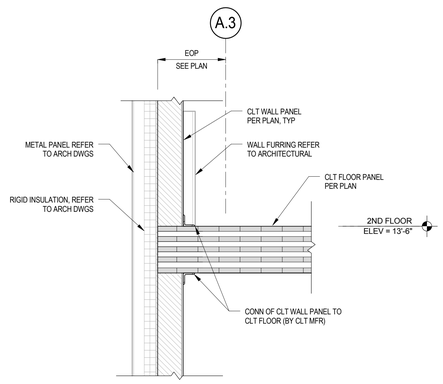

NOTE:
1. PROVIDE ALTERNATE CONCEALED WALL-TO-FLOOR CONNECTION PER DETAIL 2/S-711 AT LOCATIONS WHERE BASE OF CLT WALL IS EXPOSED, REFER TO ARCHITECTURAL DRAWINGS.

2 CLT FRAMING AT METAL PANEL
S-511 SCALE: 3/4" = 1'-0"

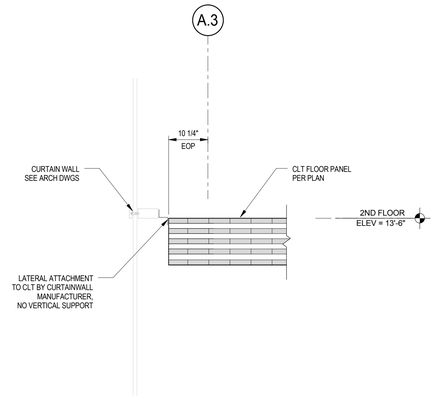

3 CLT FRAMING AT CURTAIN WALL
S-511 SCALE: 3/4" = 1'-0"

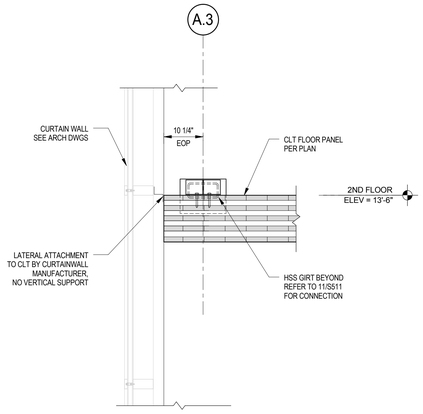

4 GIRT CONNECTION AT CLT FLOOR
S-511 SCALE: 3/4" = 1'-0"

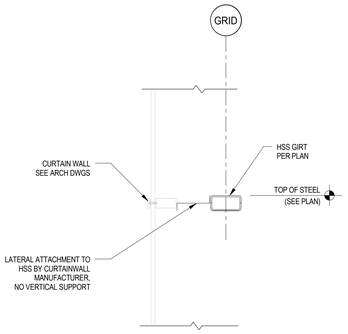

5 GIRT AT LOBBY CURTAIN WALL
S-511 SCALE: 3/4" = 1'-0"

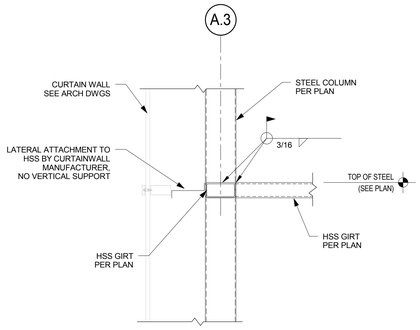

6 GIRT CONNECTION AT LOBBY CURTAIN WALL
S-511 SCALE: 3/4" = 1'-0"

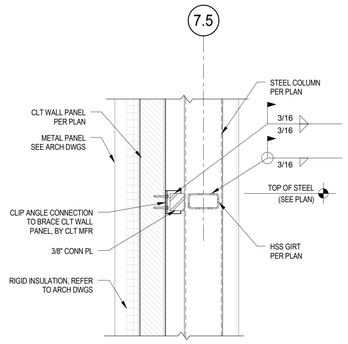

7 CLT WALL CONNECTION AT STEEL COLUMN
S-511 SCALE: 3/4" = 1'-0"

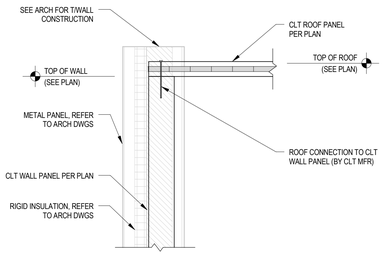

8 CLT FRAMING AT VESTIBULE ROOF
S-511 SCALE: 3/4" = 1'-0"

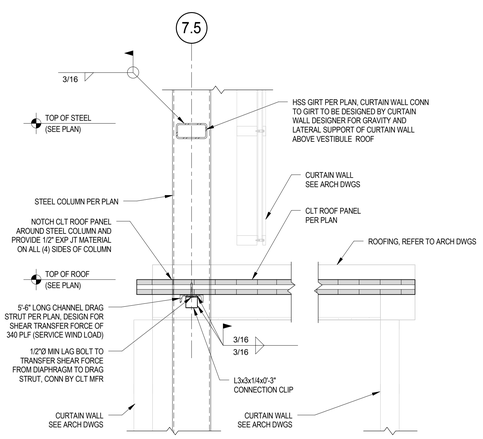

9 CLT CONNECTION TO STEEL FRAMING AT VESTIBULE
S-511 SCALE: 3/4" = 1'-0"

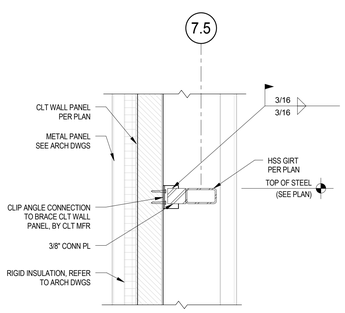

10 CLT WALL CONNECTION AT GIRT
S-511 SCALE: 3/4" = 1'-0"

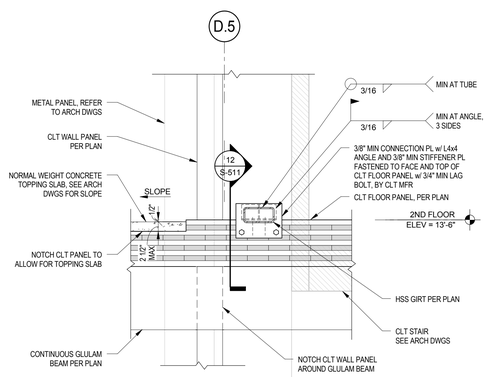

11 GIRT CONNECTION AT CLT FLOOR
S-511 SCALE: 3/4" = 1'-0"

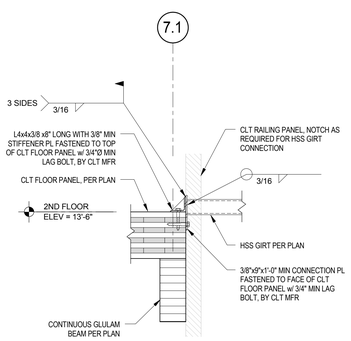

12 GIRT CONNECTION AT CLT FLOOR
S-511 SCALE: 3/4" = 1'-0"

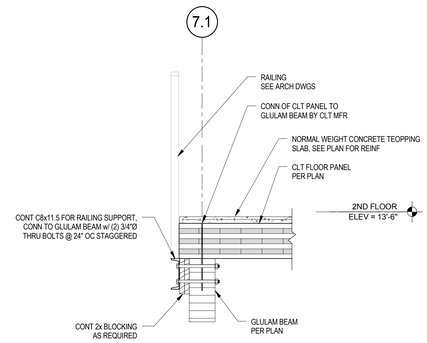

13 CLT FRAMING AT TERRACE
S-511 SCALE: 3/4" = 1'-0"

NOTES:
1. ALL STEEL AT EXTERIOR TERRACE SHALL BE HOT-DIPPED GALVANIZED.

Greenville
NORTH CAROLINA

JACOBS

333 Fayetteville Street, Suite 1100
Raleigh, NC 27601
PH: 919-334-3100 FX: 919-334-3122 www.jacobs.com
North Carolina Engineering Firm License No. F-287
North Carolina Architectural Firm Reg. No. 50757

AYERS SAINT GROSS

Consultants:

ARK Consulting Group, PLLC

Coaly Design
Landscape Architecture + Land Planning

Seals:

NORTH CAROLINA PROFESSIONAL SEAL 030518 ENGINEER TREVOR WINNELL

05/10/2016

General Notes:

Project Client:
CITY OF GREENVILLE

GREENVILLE TRANSPORTATION AND ACTIVITY CENTER
600 S. Pitt Street, Greenville, NC

Number	Description	Date
0	IFC	05/10/16

Key Plan: Project North

CAD File:
Project No.: L3005900
Copyright: 2015 Jacobs Engineering Group

Drawing Sheet Title:
FLOOR FRAMING SECTIONS & DETAILS

Drawing Sheet Number:
S-511

Owner's Drawing Sheet No.:

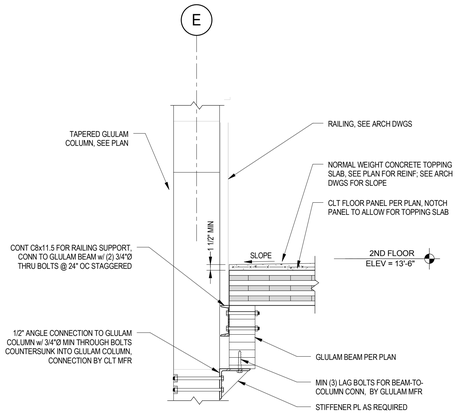

1 CLT FLOOR AT TERRACE EDGE BEAM
S-512 SCALE: 3/4" = 1'-0"

NOTES:
1. ALL STEEL AT EXTERIOR TERRACE SHALL BE HOT-DIPPED GALVANIZED.

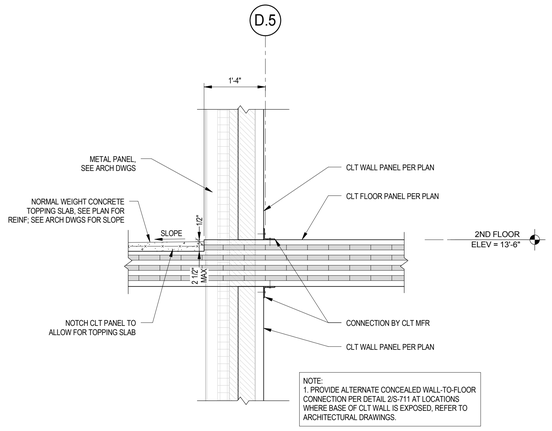

2 CLT TERRACE FLOOR TRANSITION AT EXTERIOR WALL
S-512 SCALE: 3/4" = 1'-0"

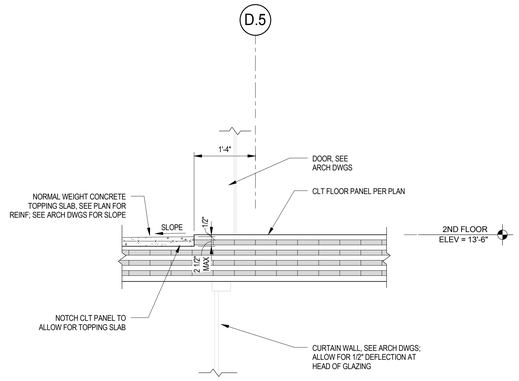

3 CLT TERRACE FLOOR TRANSITION AT EXTERIOR DOOR
S-512 SCALE: 3/4" = 1'-0"

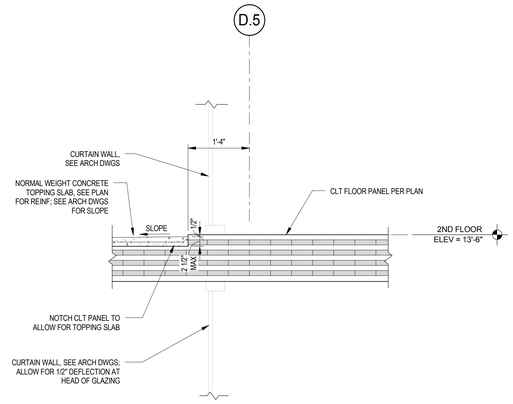

4 CLT TERRACE FLOOR TRANSITION AT EXTERIOR CURTAIN WALL
S-512 SCALE: 3/4" = 1'-0"

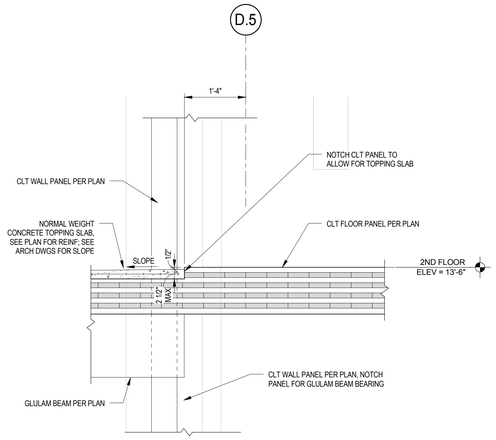

5 TERRACE GLULAM EDGE BEAM AT CLT BEARING WALL
S-512 SCALE: 3/4" = 1'-0"

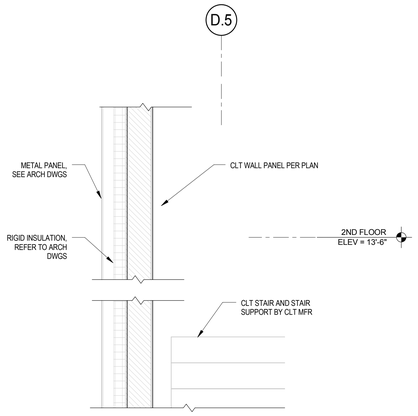

6 EXTERIOR CLT WALL AT STAIR SHAFT
S-512 SCALE: 3/4" = 1'-0"

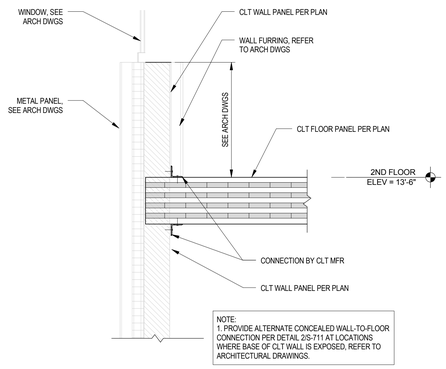

7 CLT FRAMING AT EXTERIOR WALL W/ WINDOW
S-512 SCALE: 3/4" = 1'-0"

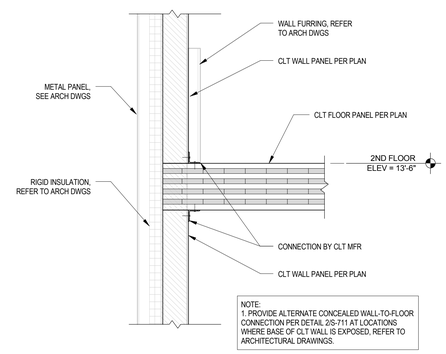

8 CLT FRAMING AT EXTERIOR WALL W/ VENEER
S-512 SCALE: 3/4" = 1'-0"

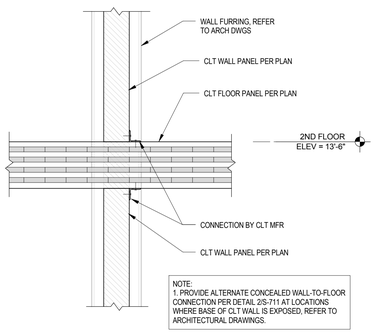

9 CLT FRAMING AT INTERIOR BEARING WALL
S-512 SCALE: 3/4" = 1'-0"

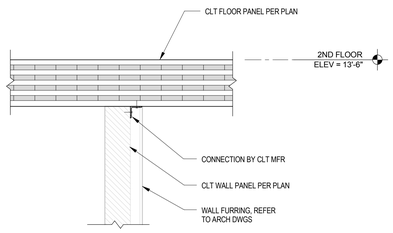

10 CLT FRAMING AT INTERIOR BEARING WALL
S-512 SCALE: 3/4" = 1'-0"

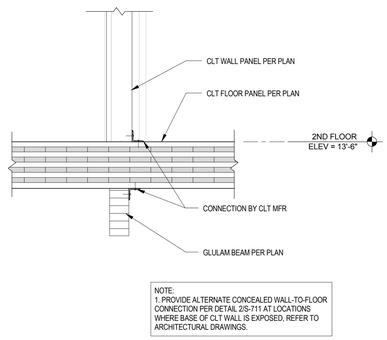

11 CLT FRAMING AT GLULAM BEAM
S-512 SCALE: 3/4" = 1'-0"

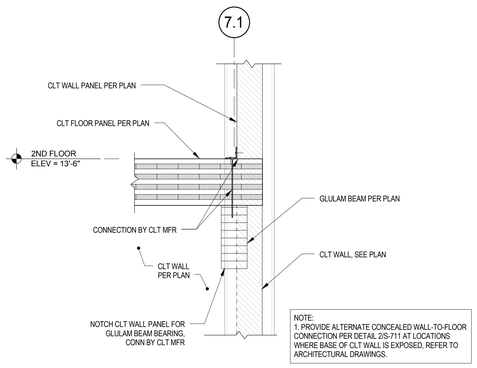

12 CLT FRAMING AT GLULAM BEAM
S-512 SCALE: 3/4" = 1'-0"

NOTES:
1. ALL STEEL AT EXTERIOR TERRACE SHALL BE HOT-DIPPED GALVANIZED.

Greenville
NORTH CAROLINA

JACOBS
333 Fayetteville Street, Suite 1100
Raleigh, NC 27601
PH: 919-334-3100 FX: 919-334-3122 www.jacobs.com
North Carolina Engineering Firm License No. F-287
North Carolina Architectural Firm Reg. No. 50757

AYERS SAINT GROSS

Consultants:
ARK Consulting Group, PLLC

Coaly Design
Landscape Architecture + Land Planning

Seals:

NORTH CAROLINA PROFESSIONAL SEAL 030518 ENGINEER TREVOR WINNELL

05/10/2016

General Notes:

Project Client:
CITY OF GREENVILLE

GREENVILLE TRANSPORTATION AND ACTIVITY CENTER
600 S. Pitt Street, Greenville, NC

Number	Description	Date
0	IFC	05/10/16

Key Plan: Project North

CAD File:
Project No.: L3005900
Copyright: 2015 Jacobs Engineering Group

Drawing Sheet Title:
FLOOR FRAMING SECTIONS & DETAILS

Drawing Sheet Number:
S-512

Owner's Drawing Sheet No.:

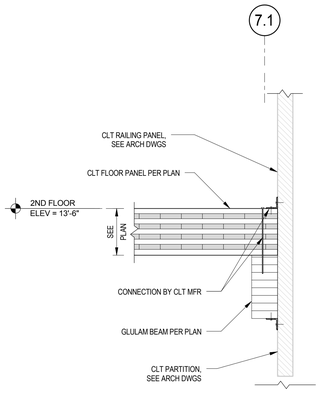

1 CLT FLOOR FRAMING AT RAILING PANEL
S-513 SCALE: 3/4" = 1'-0"

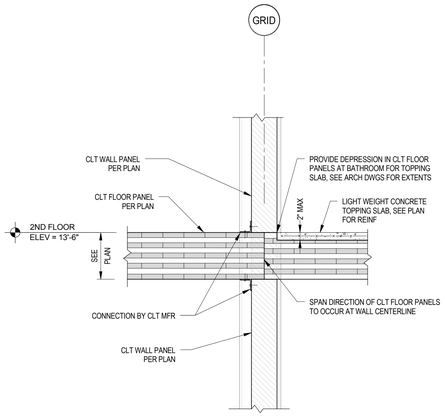

2 CLT FLOOR SPAN DIRECTION CHANGE AT TERRACE
S-513 SCALE: 3/4" = 1'-0"

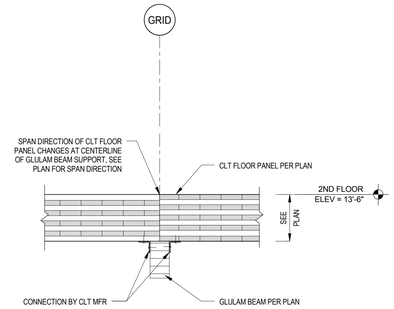

3 CLT FLOOR SPAN DIRECTION CHANGE AT INTERIOR BEAM
S-513 SCALE: 3/4" = 1'-0"

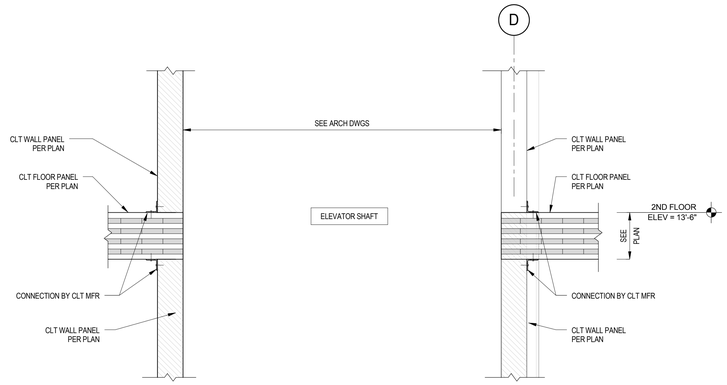

4 CLT FLOOR FRAMING AT ELEVATOR
S-513 SCALE: 3/4" = 1'-0"

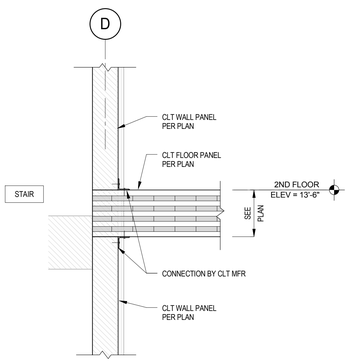

5 CLT FLOOR FRAMING AT STAIR
S-513 SCALE: 3/4" = 1'-0"

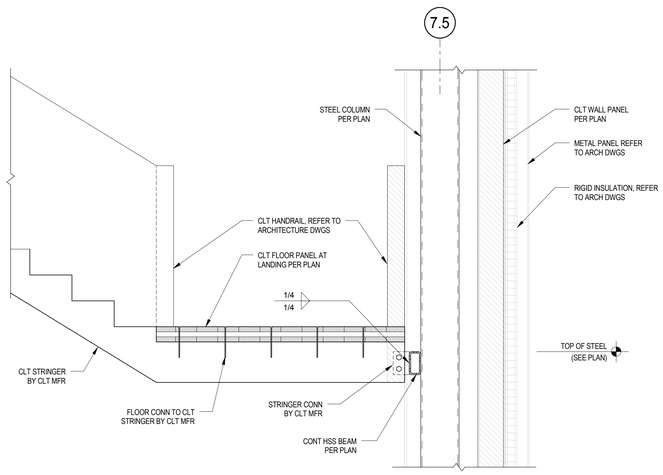

6 MONUMENTAL STAIR LANDING
S-513 SCALE: 3/4" = 1'-0"

Greenville NORTH CAROLINA
JACOBS
333 Fayetteville Street, Suite 1100
Raleigh, NC 27601
PH: 919-334-3100 FX: 919-334-3122 www.jacobs.com
North Carolina Engineering Firm License No. F-287
North Carolina Architectural Firm Reg. No. 50757
AYERS SAINT GROSS

Consultants:
ARK Consulting Group, PLLC
Coaly Design
Landscape Architecture + Land Planning

Seals:
NORTH CAROLINA PROFESSIONAL SEAL 030518 ENGINEER TREVOR WINNELL
05/10/2016

General Notes:

Project Client:
CITY OF GREENVILLE

GREENVILLE TRANSPORTATION AND ACTIVITY CENTER
600 S. Pitt Street, Greenville, NC

Number	Description	Date
0	IFC	05/10/16

Key Plan: Project North

CAD File:
Project No.: L3005900
Copyright: 2015 Jacobs Engineering Group

Drawing Sheet Title:
FLOOR FRAMING SECTIONS & DETAILS

Drawing Sheet Number:
S-513

Owner's Drawing Sheet No.:

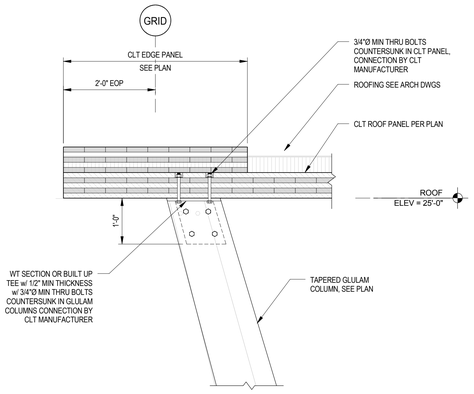

1 GLULAM COLUMN TOP CONNECTION TO CLT
S-514 SCALE: 3/4" = 1'-0"

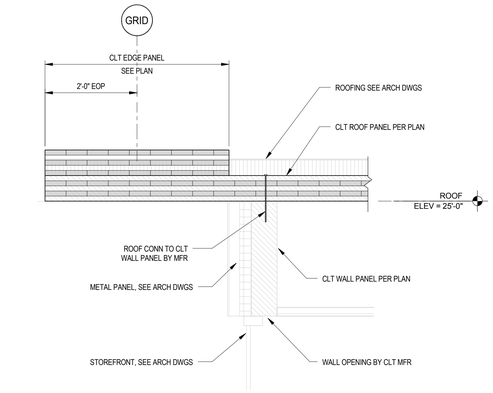

2 CLT ROOF OVERHANG AT EXTERIOR BEARING WALL
S-514 SCALE: 3/4" = 1'-0"

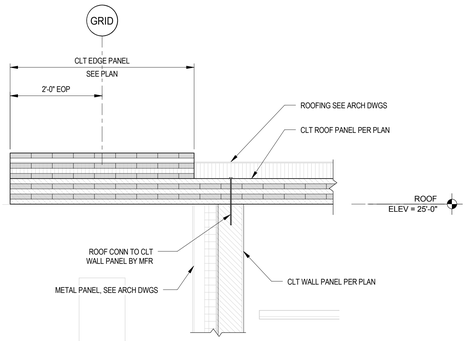

3 CLT ROOF OVERHANG AT EXTERIOR BEARING WALL
S-514 SCALE: 3/4" = 1'-0"

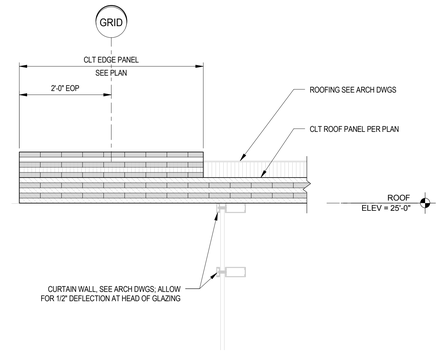

4 CLT ROOF OVERHANG AT CURTAIN WALL
S-514 SCALE: 3/4" = 1'-0"

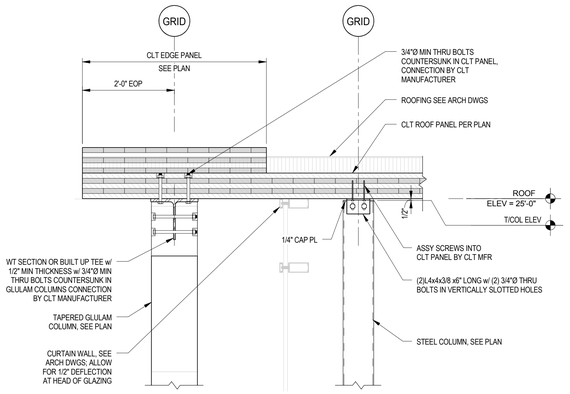

5 GLULAM COLUMN AND STEEL COLUMN TOP CONNECTION TO CLT ROOF
S-514 SCALE: 3/4" = 1'-0"

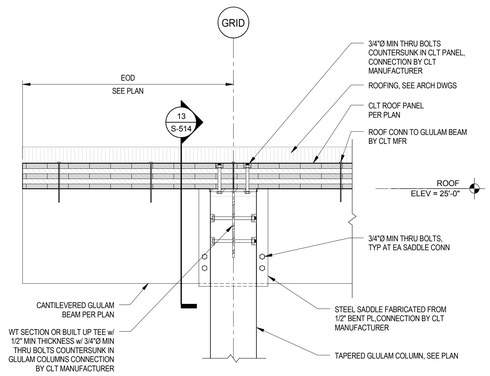

6 GLULAM COLUMN TO BEAM CONNECTION AT ROOF
S-514 SCALE: 3/4" = 1'-0"

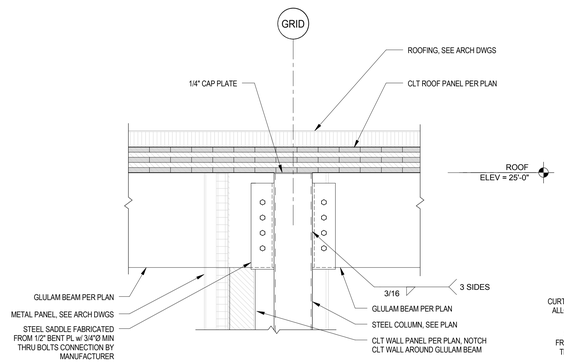

7 GLULAM BEAM TO STEEL COLUMN CONNECTION AT ROOF
S-514 SCALE: 3/4" = 1'-0"

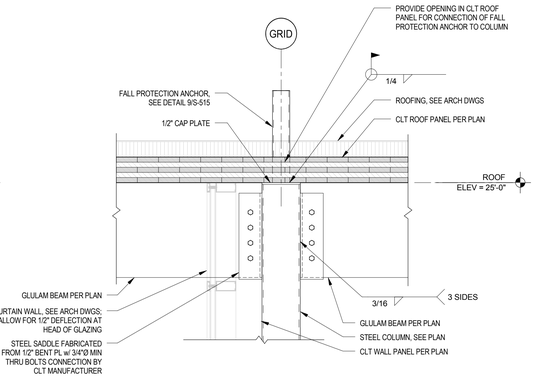

8 GLULAM BEAMTO STEEL COLUMN CONNECTION W/ FALL PROTECTION
S-514 SCALE: 3/4" = 1'-0"

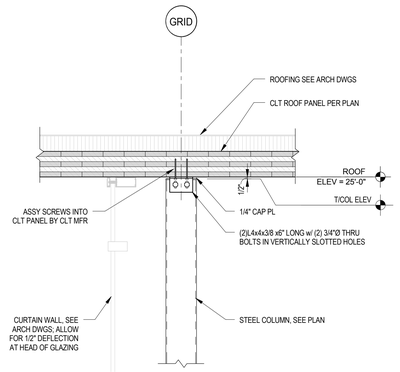

9 STEEL COLUMN TOP CONNECTION TO CLT ROOF
S-514 SCALE: 3/4" = 1'-0"

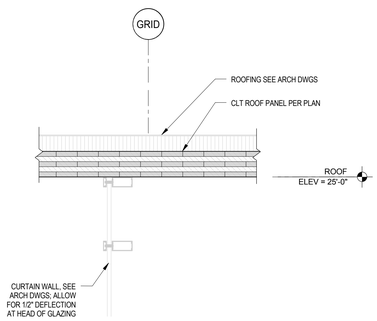

10 CLT ROOF FRAMING AT EXTERIOR CURTAIN WALL
S-514 SCALE: 3/4" = 1'-0"

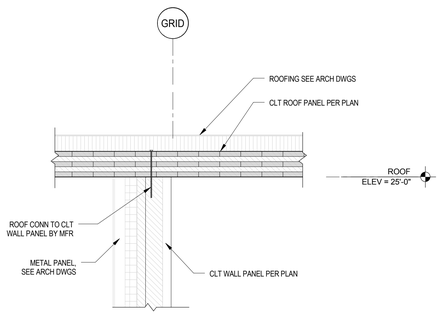

11 CLT ROOF FRAMING AT EXTERIOR BEARING WALL
S-514 SCALE: 3/4" = 1'-0"

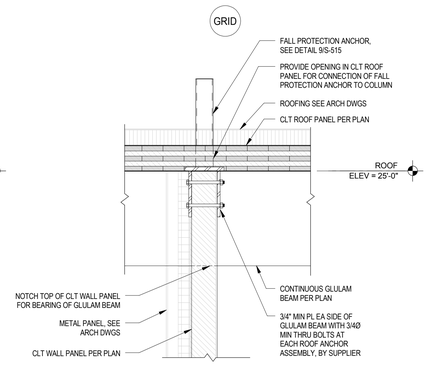

12 GLULAM BEAM BEARING ON EXTERIOR CLT WALL
S-514 SCALE: 3/4" = 1'-0"

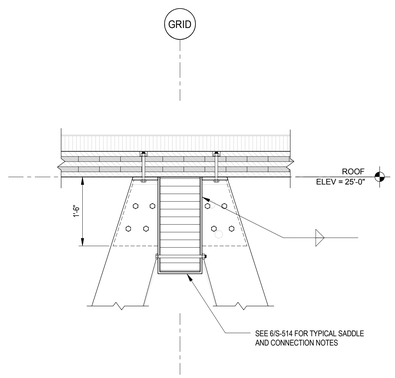

13 GLULAM COLUMN TO BEAM CONNECTION AT ROOF
S-514 SCALE: 3/4" = 1'-0"

Greenville
NORTH CAROLINA

JACOBS
333 Fayetteville Street, Suite 1100
Raleigh, NC 27601
PH: 919-334-3100 FX: 919-334-3122 www.jacobs.com
North Carolina Engineering Firm License No. F-287
North Carolina Architectural Firm Reg. No. 50757

AYERS SAINT GROSS

Consultants:
ARK Consulting Group, PLLC

Coaly Design
Landscape Architecture + Land Planning

Seals:

05/10/2016

General Notes:

Project Client:
CITY OF GREENVILLE

GREENVILLE TRANSPORTATION AND ACTIVITY CENTER
600 S. Pitt Street, Greenville, NC

Number	Description	Date
0	IFC	05/10/16

Key Plan: Project North

CAD File:
Project No.: L3005900
Copyright: 2015 Jacobs Engineering Group

Drawing Sheet Title:
ROOF FRAMING SECTIONS & DETAILS

Drawing Sheet Number:
S-514

Owner's Drawing Sheet No.:

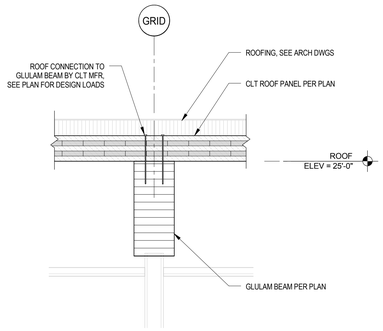

1 CLT ROOF BEARING ON GLULAM BEAM
S-515 SCALE: 3/4" = 1'-0"

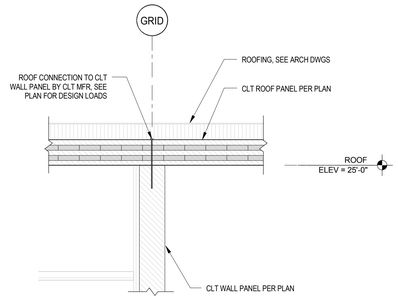

2 CLT ROOF AT CLT BEARING WALL
S-515 SCALE: 3/4" = 1'-0"

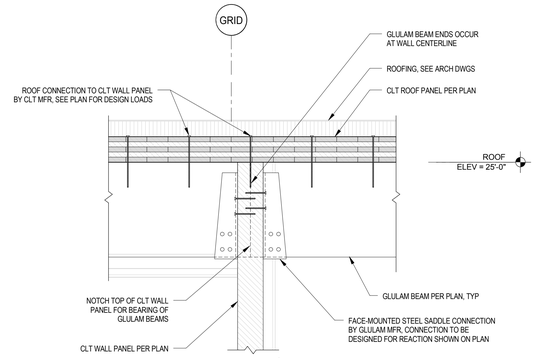

3 GLULAM BEAMS AT CLT BEARING
S-515 SCALE: 3/4" = 1'-0"

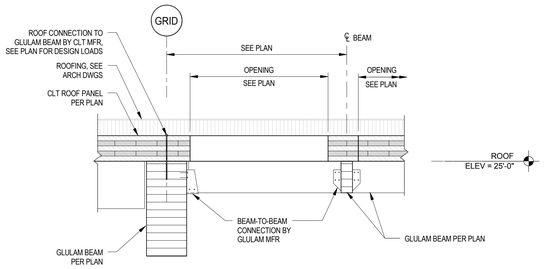

4 GLULAM FRAMING AT ROOF OPENINGS
S-515 SCALE: 3/4" = 1'-0"

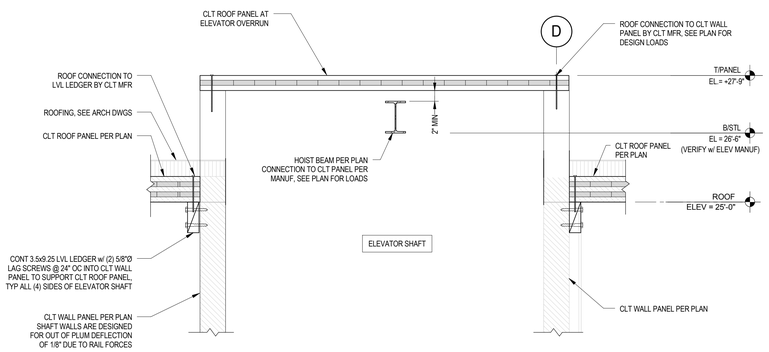

5 SECTION AT ELEVATOR OVERRUN
S-515 SCALE: 3/4" = 1'-0"

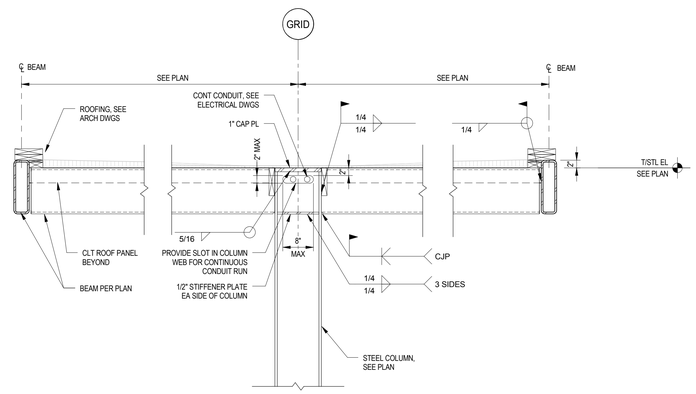

6 SECTION AT BUS CANOPY COLUMN
S-515 SCALE: 3/4" = 1'-0"

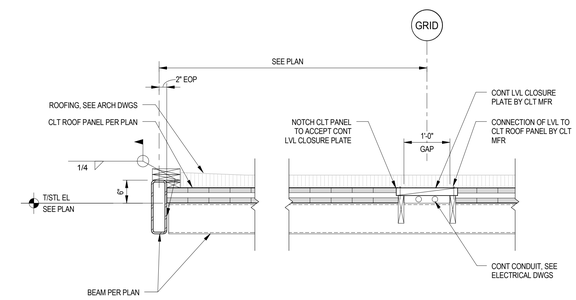

7 SECTION AT BUS CANOPY INTERMEDIATE BEAM
S-515 SCALE: 3/4" = 1'-0"

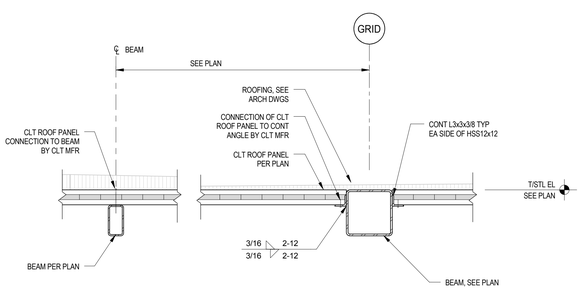

8 SECTION AT BUS CANOPY CLT SUPPORT
S-515 SCALE: 3/4" = 1'-0"

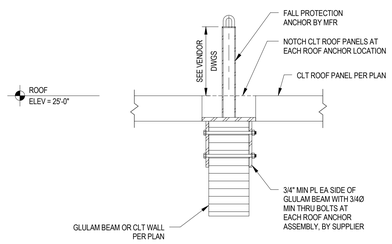

9 TYPICAL FALL PROTECTION ANCHOR DETAIL
S-515 SCALE: 3/4" = 1'-0"

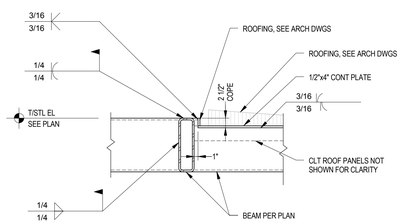

10 SECTION AT BUS CANOPY ROOF TRANSITION
S-515 SCALE: 3/4" = 1'-0"

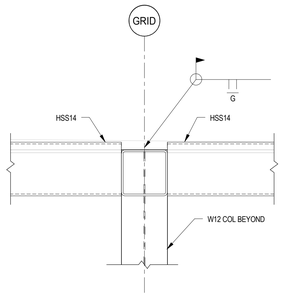

11 SECTION AT BUS CANOPY FACIA SPLICE
S-515 SCALE: 3/4" = 1'-0"

Greenville
NORTH CAROLINA

JACOBS

333 Fayetteville Street, Suite 1100
Raleigh, NC 27601
PH: 919-334-3100 FX: 919-334-3122 www.jacobs.com
North Carolina Engineering Firm License No. F-287
North Carolina Architectural Firm Reg. No. 50757

AYERS SAINT GROSS

Consultants:

ARK Consulting Group, PLLC

Coaly Design
Landscape Architecture + Land Planning

Seals:

NORTH CAROLINA PROFESSIONAL SEAL 030518 ENGINEER TREVOR WINNELL

05/10/2016

General Notes:

Project Client:
CITY OF GREENVILLE

GREENVILLE TRANSPORTATION AND ACTIVITY CENTER
600 S. Pitt Street, Greenville, NC

Number	Description	Date
0	IFC	05/10/16

Key Plan: Project North

CAD File:
Project No.: L3005900
Copyright: 2015 Jacobs Engineering Group

Drawing Sheet Title:
ROOF FRAMING SECTIONS & DETAILS

Drawing Sheet Number:
S-515

Owner's Drawing Sheet No.:

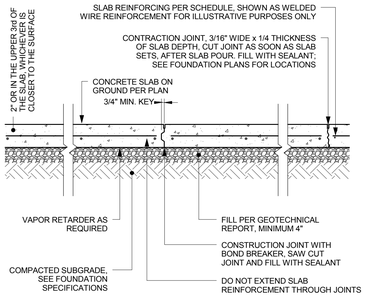

SLAB-ON-GROUND NOTES:

1. THIS DETAIL DEPICTS JOINT TYPES AS WELL AS TYPICAL SLAB REQUIREMENTS. REFER TO THE CONCRETE SLAB AND FLOOR SPECIFICATIONS FOR FURTHER REQUIREMENTS.
2. UNLESS OTHERWISE NOTED PROVIDE A SLAB FLATNESS (FF) OF 35 AND A SLAB LEVELNESS (FL) OF 30.
3. PROVIDE (2) No. 3 X 2'-6" LONG, CENTERED IN SLAB AT ALL RE-ENTRANT CORNERS EVEN IF NOT SHOWN ON THE FOUNDATION PLAN.
4. PROVIDE ISOLATION JOINTS AT JUNCTIONS WITH WALLS (NOT REQUIRING LATERAL RESTRAINT FROM THE SLAB), COLUMNS, EQUIPMENT FOUNDATIONS, FOOTINGS OR OTHER POINTS OF RESTRAINT SUCH AS DRAINS, MANHOLES, SUMPS AND STAIRWAYS EVEN IF NOT SHOWN ON THE FOUNDATION PLAN.
5. PROVIDE A VAPOR RETARDER UNDER ALL SLABS ON GROUND, SEE SPECIFICATIONS FOR RETARDER REQUIREMENTS. THE RETARDER SHALL BE PLACED DIRECTLY UNDER THE SLAB ITSELF.
6. IF CONCRETING IS INTERRUPTED LONG ENOUGH FOR THE PLACED CONCRETE TO HARDEN PROVIDE A CONSTRUCTION JOINT AS SHOWN ON THIS DETAIL. CONSTRUCTION JOINTS SHALL NOT BE PLACED CLOSER THAN 5'-0" FROM ANY JOINT TO WHICH THEY ARE PARALLEL. THE USE OF ALTERNATE CONSTRUCTION JOINTS PER ACI 302.1R-04 MAY BE USED WITH APPROVAL FROM DESIGN PROFESSIONAL.
7. PROVIDE CONTRACTION JOINTS BETWEEN COLUMN LINES AS SHOWN ON THE FOUNDATION PLANS.
8. PROVIDE #3@18" OC REINFORCING IN 5" CONCRETE SLAB ON GROUND.
9. MAXIMUM CONTROL JOINT SPACING FOR 5" SLAB SHALL NOT EXCEED 15'-0" OC.

1 TYPICAL SLAB ON GROUND REQUIREMENTS
S-701 SCALE: 3/4" = 1'-0"

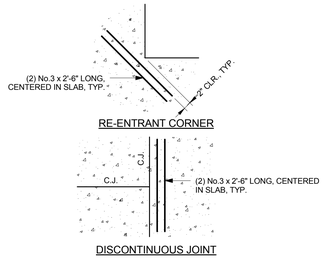

2 TYPICAL REINFORCEMENT AT SLAB RE-ENTRANT CORNERS
S-701 SCALE: 3/4" = 1'-0"

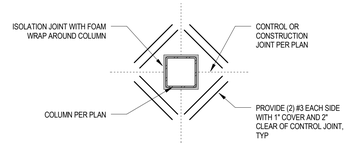

3 TYPICAL EXPANSION JOINT MATERIAL AT STEEL COLUMN
S-701 SCALE: 3/4" = 1'-0"

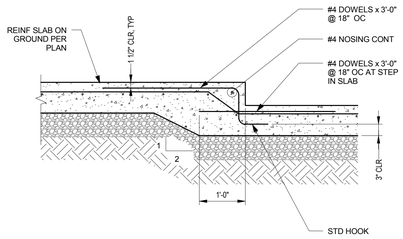

4 TYPICAL STEP IN SLAB-ON-GROUND (6" MAX)
S-701 SCALE: 3/4" = 1'-0"

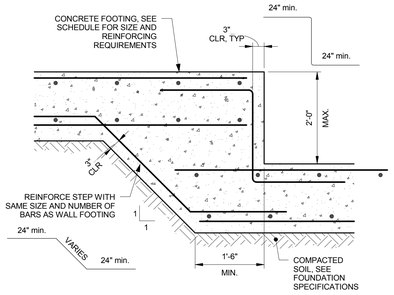

5 TYPICAL STEPPED FOOTING REQUIREMENTS
S-701 SCALE: 3/4" = 1'-0"

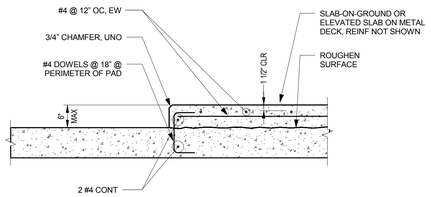

NOTE:
1. SEE ARCH, MECH, PLUMBING, FIRE PROTECTION, & ELEC DWGS FOR EQUIPMENT PAD DIMENSIONS AND LOCATIONS
2. AT CONTRACTOR'S OPTION POST INSTALLED DOWELS MAY BE USED. INSTALL USING HIT-HY 200 ADHESIVE WITH 2 3/4" EMBEDMENT

6 TYPICAL RAISED SLAB OR EQUIPMENT PAD DETAIL
S-701 SCALE: 3/4" = 1'-0"

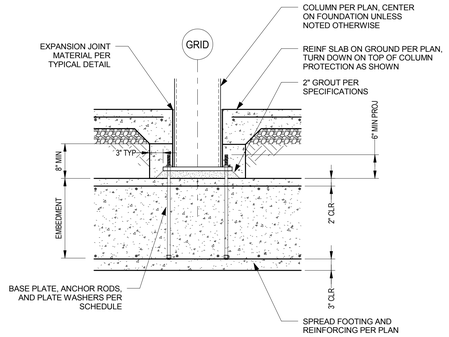

7 TYPICAL COLUMN SETTING DETAIL
S-701 SCALE: 3/4" = 1'-0"

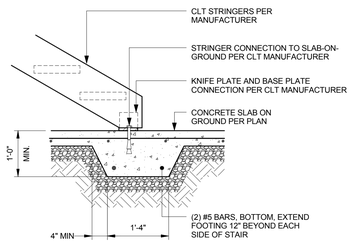

8 THICKENED SLAB AT STAIR STRINGER
S-701 SCALE: 3/4" = 1'-0"

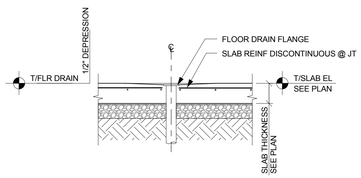

9 TYPICAL FLOOR DRAIN SLAB DEPRESSION
S-701 SCALE: 1/2" = 1'-0"

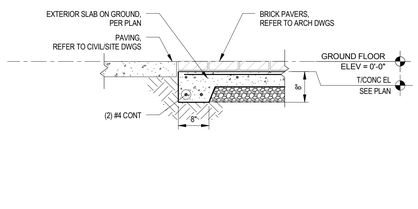

10 TURNDOWN SLAB EDGE AT EXTERIOR SLAB-ON-GROUND
S-701 SCALE: 3/4" = 1'-0"

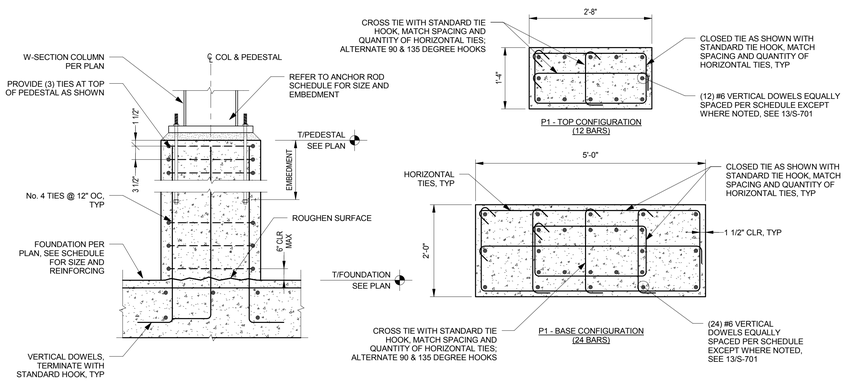

11 TYPICAL PEDESTAL DETAIL
S-701 SCALE: 3/4" = 1'-0"

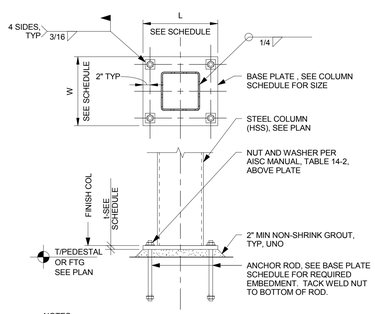

NOTES:
1. SET AND SECURE ANCHOR RODS WITH TEMPLATES PRIOR TO PLACING CONCRETE.
2. PROVIDE 1/2" MINIMUM EXTENSION OF ANCHOR RODS ABOVE TOP NUT.
3. LEVELING NUTS SHALL NOT BE USED. PROVIDE SHIM PLATES UNDER BASE PLATES
4. INSTALL GROUT AFTER COLUMN HAS BEEN PLUMBED AND PRIOR TO ERECTION OF SECOND TIER OF STEEL FRAMING.

BASE PLATE SCHEDULE

	BASE PLATE			ANCHOR BOLTS	
MARK	LENGTH (L)	WIDTH (W)	THICKNESS (t)	QTY & SIZE	EMBEDMENT
BP1	17"	17"	1"	(4) 1"Ø	1'-4"
BP2	14"	14"	3/4"	(4) 3/4"Ø	0'-8"
BP3	16"	16"	3/4"	(4) 3/4"Ø	0'-8"

12 COLUMN BASE DETAIL
S-701 SCALE: 3/4" = 1'-0"

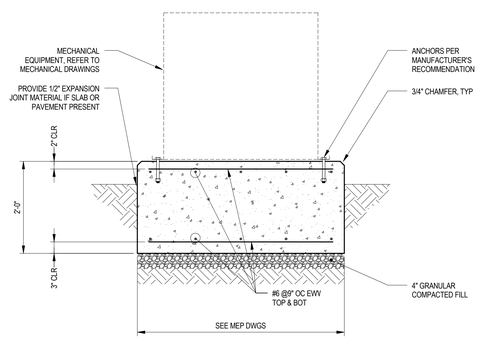

13 TYPICAL EQUIPMENT MAT FOUNDATION
S-701 SCALE: 3/4" = 1'-0"

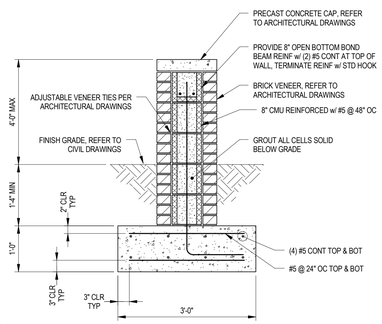

14 MASONRY SITE WALL
S-701 SCALE: 3/4" = 1'-0"

Greenville NORTH CAROLINA
JACOBS
333 Fayetteville Street, Suite 1100
Raleigh, NC 27601
PH: 919-334-3100 FX: 919-334-3122 www.jacobs.com
North Carolina Engineering Firm License No. F-287
North Carolina Architectural Firm Reg. No. 50757
AYERS SAINT GROSS
Consultants:
ARK Consulting Group, PLLC
Coaly Design Landscape Architecture + Land Planning

Seals:

NORTH CAROLINA PROFESSIONAL SEAL 030518 ENGINEER TREVOR W. WINNELL

05/10/2016

General Notes:

Project Client:
CITY OF GREENVILLE

GREENVILLE TRANSPORTATION AND ACTIVITY CENTER
600 S. Pitt Street, Greenville, NC

Number	Description	Date
0	IFC	05/10/16

Key Plan: Project North

CAD File:
Project No.: L3005900
Copyright: 2015 Jacobs Engineering Group

Drawing Sheet Title:
TYPICAL FOUNDATION DETAILS

Drawing Sheet Number:
S-701

Owner's Drawing Sheet No.:

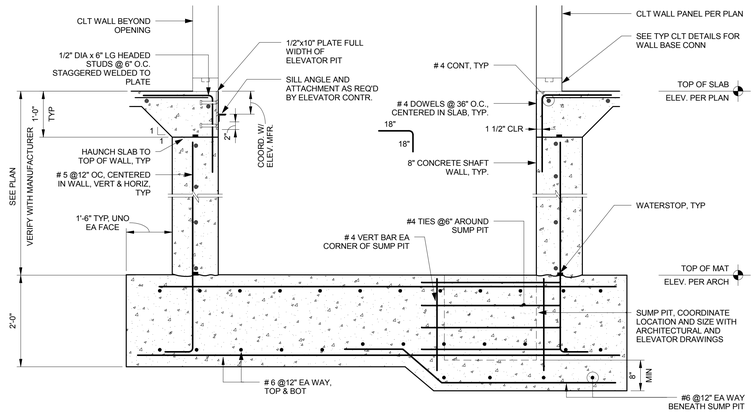

1 TYPICAL ELEVATOR MAT
S-702 SCALE: 3/4" = 1'-0"

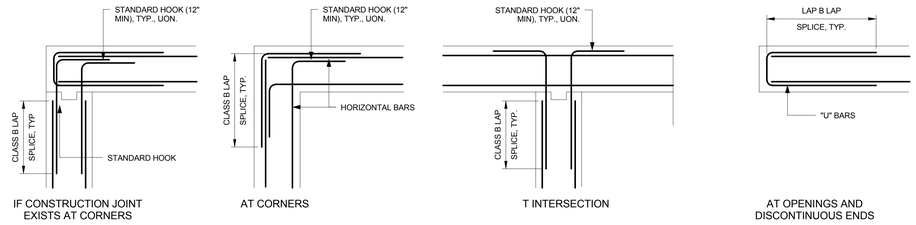

NOTES:
1. VERTICAL REINFORCING NOT SHOWN FOR CLARITY.
2. HOOKED, CORNER, AND "U" BARS SHALL MATCH SIZE OF HORIZONTAL WALL REINFORCING, TYP. UON.

2 TYPICAL WALL INTERSECTION
S-702 SCALE: 3/4" = 1'-0"

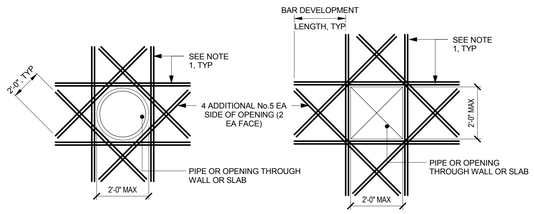

NOTES:
1. PROVIDE ADDITIONAL HORIZONTAL AND VERTICAL BARS EQUAL TO THE NUMBER OF BARS TERMINATED AT OPENING, HALF EACH SIDE.
2. TERMINATE REINFORCING w/ STANDARD HOOK WHERE OPENING IS ADJACENT TO WALL OR SLAB EDGE.
3. REFER TO ARCHITECTURAL FOR SEAL AND WATERPROOFING REQUIREMENTS.
4. OPENINGS SHALL BE SPACED NO CLOSER THAN A DISTANCE EQUAL TO THE LARGER OPENING DIMENSION.

3 TYPICAL REINFORCING AT CONCRETE OPENING
S-702 SCALE: 3/4" = 1'-0"

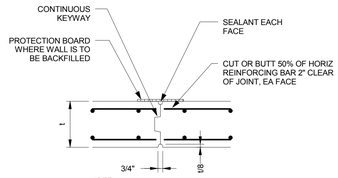

NOTE:
PROVIDE CONSTRUCTION JOINTS IN ALL WALLS AND SLABS AS REQUIRED FOR CONSTRUCTION AND AT 60'-0" MAX.

4 TYPICAL WALL OR SLAB CONSTRUCTION JOINT
S-702 SCALE: 3/4" = 1'-0"

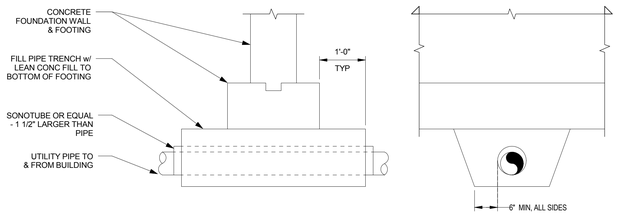

5 UTILITY PIPES UNDER WALL FOOTINGS
S-702 SCALE: NTS

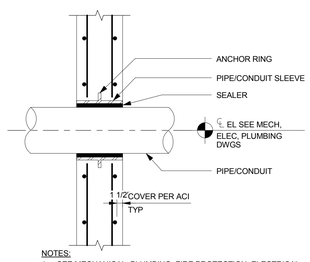

NOTES:
1. SEE MECHANICAL, PLUMBING, FIRE PROTECTION, ELECTRICAL DRAWINGS FOR SLEEVE DETAIL, SIZE, AND LOCATIONS.

6 TYPICAL UTILITY SLEEVE THRU WALL
S-702 SCALE: NTS

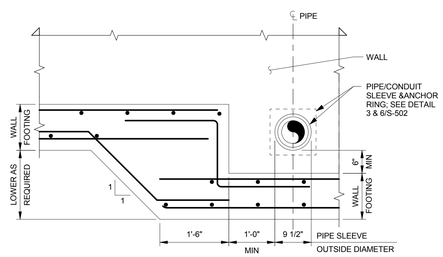

NOTES:
1. DETAIL SYMMETRICAL ABOUT CENTERLINE.
2. REFER TO DETAIL 8/S-501 FOR STEPPED FOOTING REQUIREMENTS

7 TYPICAL UTILITY CROSSING WALL FOOTING
S-702 SCALE: NTS

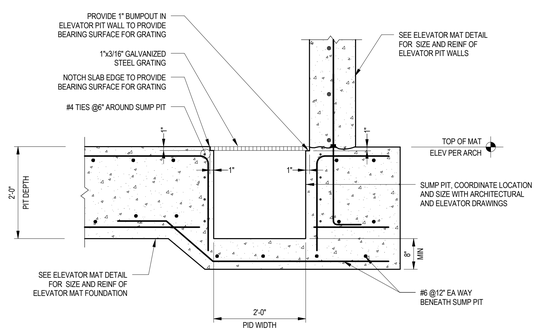

8 TYPICAL ELEVATOR SUMP PIT
S-702 SCALE: 3/4" = 1'-0"

Greenville NORTH CAROLINA
JACOBS
333 Fayetteville Street, Suite 1100
Raleigh, NC 27601
PH: 919-334-3100 FX: 919-334-3122 www.jacobs.com
North Carolina Engineering Firm License No. F-287
North Carolina Architectural Firm Reg. No. 50757
AYERS SAINT GROSS
Consultants:
ARK Consulting Group, PLLC
Coaly Design
Landscape Architecture + Land Planning

Seals:

NORTH CAROLINA PROFESSIONAL SEAL 030518 ENGINEER TREVOR W. WINNELL

05/10/2016

General Notes:

Project Client:
CITY OF GREENVILLE

GREENVILLE TRANSPORTATION AND ACTIVITY CENTER
600 S. Pitt Street, Greenville, NC

Number	Description	Date
0	IFC	05/10/16

Key Plan: Project North

CAD File:
Project No.: L3005900
Copyright: 2015 Jacobs Engineering Group

Drawing Sheet Title:
TYPICAL FOUNDATION DETAILS

Drawing Sheet Number:
S-702

Owner's Drawing Sheet No.:

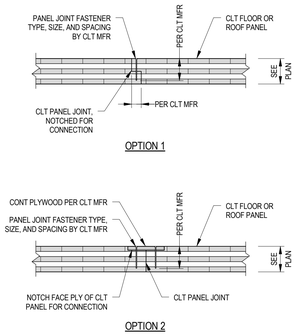

1 TYPICAL CLT FLOOR/ROOF JOINT PARALLEL TO MAIN LAYERS

S-711 SCALE: 3/4" = 1'-0"

NOTES:

1. ALL PANEL JOINTS TO HAVE SEALANT, TYP UNO. SEE ARCH DWGS.

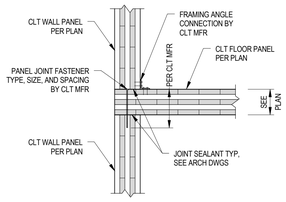

TYP EXTERIOR WALL TO FLOOR CONNECTION

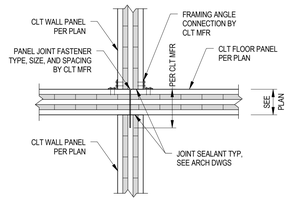

TYP INTERIOR WALL TO FLOOR CONNECTION

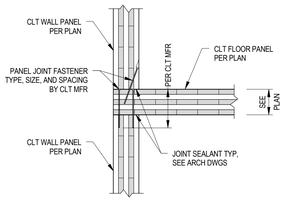

CONCEALED WALL TO FLOOR CONNECTION OPTION

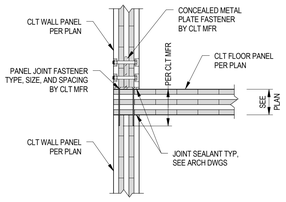

CONCEALED WALL TO FLOOR CONNECTION OPTION

2 TYPICAL CLT WALL TO FLOOR CONNECTION DETAILS

S-711 SCALE: 3/4" = 1'-0"

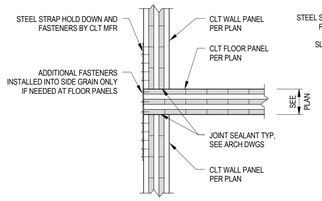

TYP EXTERIOR WALL HOLD DOWN CONNECTION AT ELEVATED FLOOR

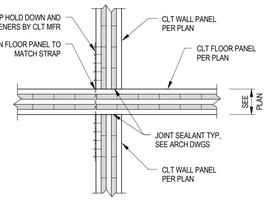

TYP INTERIOR WALL HOLD DOWN CONNECTION AT ELEVATED FLOOR

3 TYPICAL CLT HOLD DOWN CONNECTIONS AT ELEVATED FLOOR

S-711 SCALE: 3/4" = 1'-0"

NOTES:

1. CLT WALL TO FLOOR CONNECTION NOT SHOWN FOR CLARITY, REFER TO TYPICAL DETAILS.

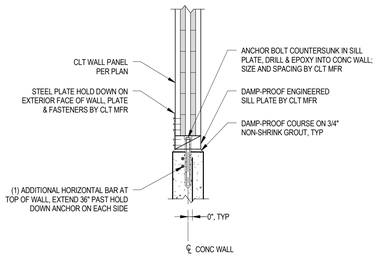

4 TYPICAL EXTERIOR CLT WALL HOLD DOWN ANCHORS AT WALL BASE

S-711 SCALE: 3/4" = 1'-0"

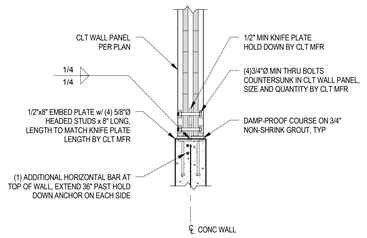

5 TYPICAL INTERIOR CLT WALL HOLD DOWN ANCHORS AT WALL BASE

S-711 SCALE: 3/4" = 1'-0"

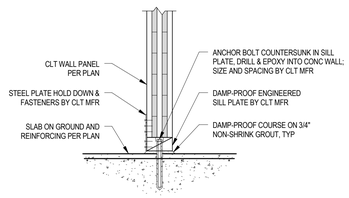

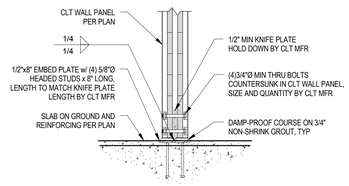

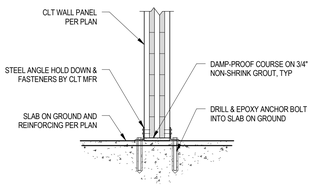

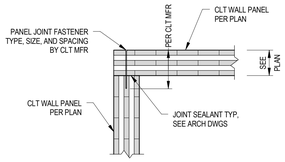

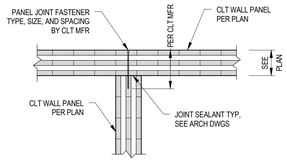

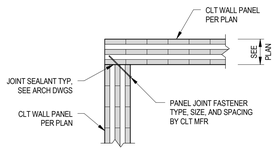

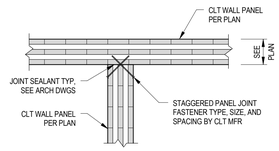

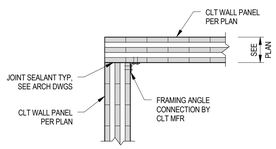

PLAN DETAIL - CORNER WALL CONNECTION

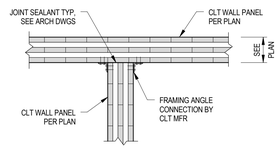

PLAN DETAIL - WALL T-INTERSECTION

6 TYPICAL CLT WALL CONNECTION PLAN DETAILS

S-711 SCALE: 3/4" = 1'-0"

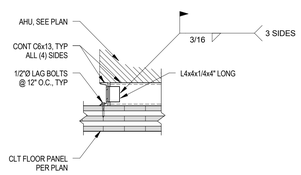

7 AHU STEEL CHANNEL SUPPORT FRAME

S-711 SCALE: 3/4" = 1'-0"

Greenville NORTH CAROLINA

JACOBS

333 Fayetteville Street, Suite 1100
Raleigh, NC 27601
PH: 919-334-3100 FX: 919-334-3122 www.jacobs.com
North Carolina Engineering Firm License No. F-287
North Carolina Architectural Firm Reg. No. 50757

AYERS SAINT GROSS

Consultants:

ARK Consulting Group, PLLC

Coaly Design
Landscape Architecture + Land Planning

Seals:

NORTH CAROLINA PROFESSIONAL SEAL 030518 ENGINEER TREVOR WINNELL

05/10/2016

General Notes:

Project Client:

CITY OF GREENVILLE

GREENVILLE TRANSPORTATION AND ACTIVITY CENTER
600 S. Pitt Street, Greenville, NC

Number	Description	Date
0	IFC	05/10/16

Key Plan: Project North

CAD File:

Project No.: L3005900

Copyright: 2015 Jacobs Engineering Group

Drawing Sheet Title:

TYPICAL CLT FRAMING DETAILS

Drawing Sheet Number:

S-711

Owner's Drawing Sheet No.:

ABBREVIATIONS

A	
A/C	AIR CONDITION
AD	AREA DRAIN
AED	DEFIBRILLATOR
AFF	ABOVE FINISHED FLOOR
AHU	AIR HANDLING UNIT
ALUM	ALUMINUM
ANO	ANODIZED
B	
BOS	BOTTOM OF STEEL
BO	BOTTOM OF
C	
C	CELSIUS
CF/CI	CONTRACTOR FURNISHED/ CONTRACTOR INSTALLED
CF/OI	CONTRACTOR FURNISHED/ OWNER INSTALLED
CG	CORNER GUARD
CH	COAT HOOK
CJ	CONSTRUCTION JOINT; CONTROL JOINT
CL	CENTERLINE
CLO	CLOSET
CLT	CROSS LAMINATED TIMBER
CMU	CONCRETE MASONRY UNIT
CONC	CONCRETE
CONT	CONTINUOUS
CORR	CORRIDOR
CUH	CABINET UNIT HEATER
D	
D	DEEP
DEMO	DEMOLITION
DF	DRINKING FOUNTAIN
DIA	DIAMETER
DR	DOOR
DS	DOWNSPOUT
DWG	DRAWING
E	
EIFS	EXTERIOR INSULATION AND FINISH SYSTEM
EJ	EXPANSION JOINT
EL	ELEVATION
EOS	EDGE OF SLAB
EQ	EQUAL
ERD	EXISTING ROOF DRAIN
EWC	ELECTRIC WATER COOLER
EXIST	EXISTING
EXP	EXPOSED
EXT	EXTERIOR
F	
F	FAHRENHEIT
FA	FIRE ALARM
FACP	FIRE ALARM CONTROL PANEL
FEC	FIRE EXTINGUISHER CABINET
FD	FLOOR DRAIN
FDC	FIRE DEPARTMENT CONNECTION
FE	FIRE EXTINGUISHER
FEC	FIRE EXTINGUISHER IN 1 HOUR FIRE RATED FIRE EXTINGUISHER CABINET
FLR	FLOOR
FHC	FIRE HOSE CABINET
FIBG	FIBERGLASS
FIN	FINISH
FO	FNISHED OPENING
FOC	FACE OF CONCRETE
FOM	FACE OF MASONRY
FOS	FACE OF STUD
FOW	FACE OF WALL
FRG	FIBER REINFORCED GYPSUM
FSP	FIRE STANDPIPE
G	
GFRC	GLASS-FIBER-REINFORCED CONCRETE
GFRG	GLASS-FIBER-REINFORCED GYPSUM
GL	GLASS
GWB	GYPSUM (WALL) BOARD
H	
H	HIGH
HB	HOSE BIBB
HM	HOLLOW METAL
HPC	HIGH PERFORMANCE COATING
HPT	HIGH POINT
HR	HOUR
HT	HEIGHT
I	
ID	INSIDE DIAMETER; INSIDE DIMENSION
IGU	INSULATED GLAZING UNIT
INFO	INFORMATION
J	
JAN	JANITOR
K (NOT USED)	
L	
LAB	LABORATORY
LAV	LAVATORY
LPT	LOW POINT
M	
MACH RM	MACHINE ROOM
MAX	MAXIMUM
MFR	MANUFACTURER
MIN	MINIMUM
MIN	MINUTE
MO	MASONRY OPENING
N	
NA	NOT APPLICABLE
NIC	NOT IN CONTRACT
NOM	NOMINAL
NTS	NOT TO SCALE
O	
OC	ON CENTER
OD	OVERFLOW DRAIN
	OUTSIDE DIMENSION
OF/CI	OWNER FURNISHED/ CONTRACTOR INSTALLED
OF/OI	OWNER FURNISHED/ OWNER INSTALLED
OFD	OVERFLOW DRAIN
OH DR	OVERHEAD DOOR
OPH	OPPOSITE HAND
ORIG	ORIGINAL
P	
PLAS	PLASTER
PVC	POLYVINYL CHLORIDE
PWP	PHENOLIC WALL PANEL
Q (NOT USED)	
R	
R	RADIUS; RISER
RAF	RAISED ACCESS FLOOR
RCP	REFLECTED CEILING PLAN
RDL	ROOF DRAIN LEADER
RD	ROOF DRAIN
REF	REFRIGERATOR
REST	RESTROOM
RH	RELATIVE HUMIDITY
RM	ROOM
RO	ROUGH OPENING
RTU	ROOF TOP UNIT
RWL	RAIN WATER LEADER
S	
SD	SMOKE DETECTOR
SECT	SECTION
SIM	SIMILAR
SST	STAINLESS STEEL
T	
T	TREAD
TEL	TELEPHONE
TEMP	TEMPORARY
TOC	TOP OF CONCRETE
TOM	TOP OF MASONRY
TOP	TOP OF PARAPET
TOS	TOP OF SLAB; TOP OF STEEL
TOW	TOP OF WALL
TPO	THERMOPLASTIC POLYOLEFIN
TYP	TYPICAL
U	
UL	UNDERWRITERS' LABORATORIES
UON	UNLESS OTHERWISE NOTED
V	
VEST	VESTIBULE
VIF	VERIFY IN FIELD
VMB	VISUAL MESSAGE BOARD
W	
W	WIDE
WD	WOOD
WH	WALL HYDRANT
WP	WORKING POINT
X,Y,Z (NOT USED)	

(R) BACKER ROD (F) FILLER
(S) SEALANT

THE PRECEDING LIST OF ABBREVIATIONS IS PRESENTED AS A GENERAL GUIDE AND DOES NOT NECESSARILY SHOW ALL ABBREVIATIONS USED. OTHER GENERALLY ACCEPTED ABBREVIATIONS MAY BE FOUND AMONG THE DRAWINGS - REFER TO NCS FOR DEFINITIONS. ALL ABBREVIATIONS SHOWN ABOVE MAY NOT BE USED WITHIN THIS DRAWING SET.

SYMBOLS

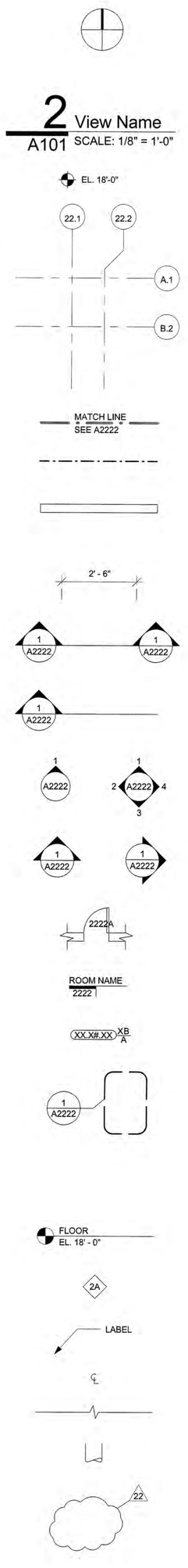

Greenville
NORTH CAROLINA

JACOBS
333 Fayetteville Street, Suite 1100
Raleigh, NC 27601
PH: 919-334-3100 FX: 919-334-3122 www.jacobs.com
North Carolina Engineering Firm License No. F-287
North Carolina Architectural Firm Reg. No. 50757

AYERS SAINT GROSS

Consultants:
ARK Consulting Group, PLLC

Coaly Design
Landscape Architecture + Land Planning

Seals:

JOHN A. STEVERMER, NC LICENSE NO. 5858

General Notes:

Project Client:
CITY OF GREENVILLE

GREENVILLE TRANSPORTATION ACTIVITY CENTER
600 S. Pitt Street, Greenville, NC

Number	Description	Date
0	IFC	05-10-2016

Key Plan: Project North

CAD File:
Project No.: L3005900
Copyright: 2015 Jacobs Engineering Group

Drawing Sheet Title:
ABBREVIATIONS & SYMBOLS

Drawing Sheet Number:
A-001

Owner's Drawing Sheet No.:

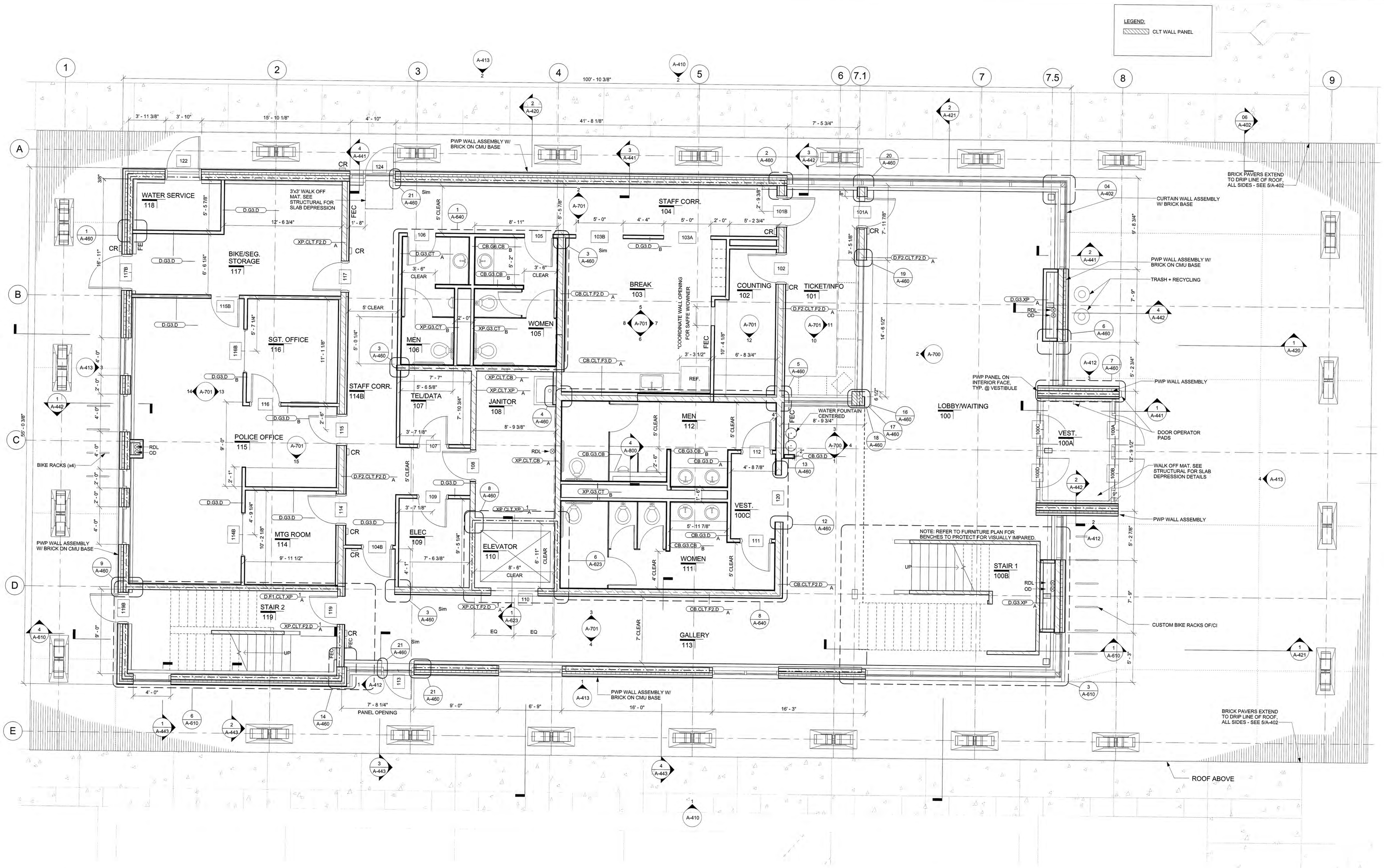

1 FIRST FLOOR PLAN
A-101 SCALE: 1/4" = 1'-0"

1-HR FIRE RATED WALL LINE

GENERAL NOTES:

1. ALL DIMENSIONS ARE TO FACE OF CLT OR STUD, U.O.N.

2. 'CLEAR' DIMENSIONS ARE TO FACE OF FINISH

2. ALL FIRE RATED WALLS TO BE CONTINUOUS FROM STRUCTURAL FLOOR TO STRUCTURAL FLOOR OR ROOF DECK ABOVE, OR AS INDICATED.

3. COORDINATE WITH SITE DOCUMENTS FOR SITE ELEMENTS.

4. REFER TO ENLARGED ELEVATIONS SHEETS IN A-400 SERIES FOR DIMENSIONAL LOCATIONS OF GLAZED DOORS AND OPENINGS WITHIN GLAZING SYSTEMS.

5. MAINTAIN REQUIRED ACOUSTICAL RATINGS WHEREVER PARTITIONS PENETRATING FINISHED CEILING ARE PIERCED BY ITEMS SUCH AS CABLE TRAY, CONDUIT, DUCTS, PIPES, OR STEEL.

6. CONCEALED BLOCKING IN PARTITIONS TO BE PROVIDED WHERE REQUIRED. THESE AREAS TO INCLUDE, BUT ARE NOT LIMITED TO, OPENED AND CLOSED SHELVING, COAT RODS AND SHELVES, CABINETRY, COUNTERS, DOOR FRAMES AND HEADERS, AND SUPPORT OF TRIM. ALSO COORDINATE BLOCKING AS REQUIRED FOR SECURITY, AUDIO VISUAL, TELECOM, PAGING LOCATIONS.

7. PROVIDE APPROVED FIRESTOPPING ASSEMBLY AT ALL SHAFT WALLS, FLOOR SLAB, AND EXTERIOR WALL PENETRATIONS AS REQUIRED. PENETRATIONS INCLUDE, BUT ARE NOT LIMITED TO, DUCTWORK, PIPEWAYS, CABLE TRAYS,AND CONDUIT RUNS.

8. WHERE SCHEDULED PARTITION TYPE IS TO BE FINISHED WITH CERAMIC TILE OR IS TO BE LOCATED IN WET APPLICATION AREA, OMIT GWB AND PROVIDE CEMENT BOARD TYPE PRODUCT.

9. ALL METAL STUD WALLS ARE D.G3.D WITH TYP. HEAD CONDITION TO DECK ABOVE, U.O.N.

10. REFER TO DRAWING A-500 FOR PARTITION TYPES

Greenville
NORTH CAROLINA

JACOBS
333 Fayetteville Street, Suite 1100
Raleigh, NC 27601
PH: 919-334-3100 FX: 919-334-3122 www.jacobs.com
North Carolina Engineering Firm License No. F-287
North Carolina Architectural Firm Reg. No. 50757

AYERS SAINT GROSS

Consultants:
ARK Consulting Group, PLLC
Coaly Design
Landscape Architecture + Land Planning

Seals:
JOHN A. STEVERMER REGISTERED ARCHITECT SEAL 5858 NORTH CAROLINA DURHAM, N.C.
05-09-16

JOHN A. STEVERMER, NC LICENSE NO. 5858

General Notes:

Project Client:
CITY OF GREENVILLE

GREENVILLE TRANSPORTATION ACTIVITY CENTER
600 S. Pitt Street, Greenville, NC

Number	Description	Date
0	IFC	05-10-2016

Key Plan:

Project North

CAD File:
Project No.: L3005900
Copyright: 2015 Jacobs Engineering Group

Drawing Sheet Title:
OVERALL FIRST FLOOR PLAN

Drawing Sheet Number:
A-101

Owner's Drawing Sheet No.:

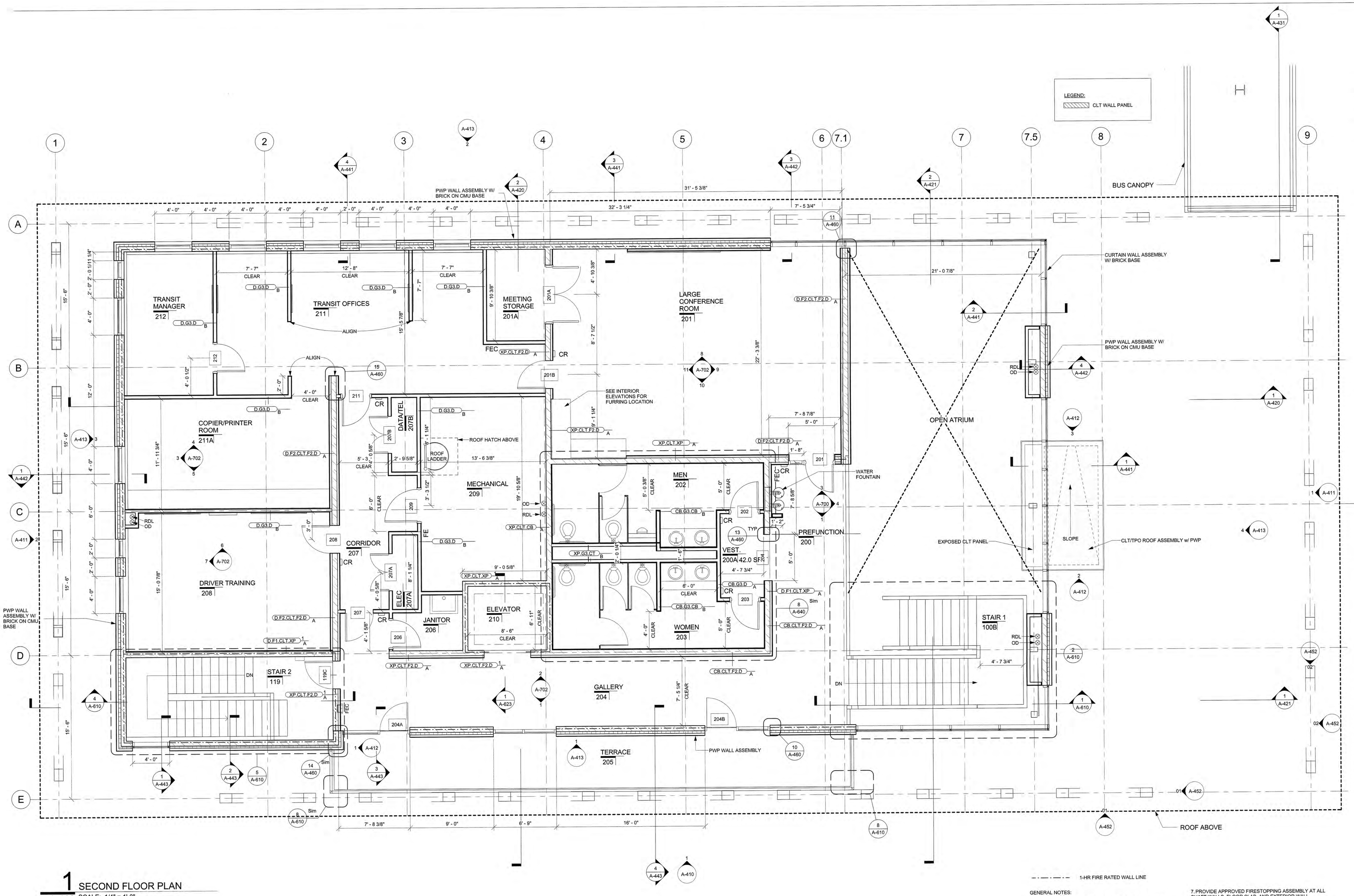

1 SECOND FLOOR PLAN
A-102 SCALE: 1/4" = 1'-0"

1-HR FIRE RATED WALL LINE

GENERAL NOTES:

1. ALL DIMENSIONS ARE TO FACE OF CLT OR STUD, U.O.N.

2. 'CLEAR' DIMENSIONS ARE TO FACE OF FINISH

2. ALL FIRE RATED WALLS TO BE CONTINUOUS FROM STRUCTURAL FLOOR TO STRUCTURAL FLOOR OR ROOF DECK ABOVE, OR AS INDICATED.

3. COORDINATE WITH SITE DOCUMENTS FOR SITE ELEMENTS.

4. REFER TO ENLARGED ELEVATIONS SHEETS IN A-400 SERIES FOR DIMENSIONAL LOCATIONS OF GLAZED DOORS AND OPENINGS WITHIN GLAZING SYSTEMS.

5. MAINTAIN REQUIRED ACOUSTICAL RATINGS WHEREVER PARTITIONS PENETRATING FINISHED CEILING ARE PIERCED BY ITEMS SUCH AS CABLE TRAY, CONDUIT, DUCTS, PIPES, OR STEEL.

6. CONCEALED BLOCKING IN PARTITIONS TO BE PROVIDED WHERE REQUIRED. THESE AREAS TO INCLUDE, BUT ARE NOT LIMITED TO, OPENED AND CLOSED SHELVING, COAT RODS AND SHELVES, CABINETRY, COUNTERS, DOOR FRAMES AND HEADERS, AND SUPPORT OF TRIM. ALSO COORDINATE BLOCKING AS REQUIRED FOR SECURITY, AUDIO VISUAL, TELECOM, PAGING LOCATIONS.

7. PROVIDE APPROVED FIRESTOPPING ASSEMBLY AT ALL SHAFT WALLS, FLOOR SLAB, AND EXTERIOR WALL PENETRATIONS AS REQUIRED. PENETRATIONS INCLUDE, BUT ARE NOT LIMITED TO, DUCTWORK, PIPEWAYS, CABLE TRAYS,AND CONDUIT RUNS.

8. WHERE SCHEDULED PARTITION TYPE IS TO BE FINISHED WITH CERAMIC TILE OR IS TO BE LOCATED IN WET APPLICATION AREA, OMIT GWB AND PROVIDE CEMENT BOARD TYPE PRODUCT.

9. ALL METAL STUD WALLS ARE D.G3.D WITH TYP. HEAD CONDITION TO DECK ABOVE, U.O.N.

10. REFER TO DRAWING A-500 FOR PARTITION TYPES

Greenville
NORTH CAROLINA

JACOBS
333 Fayetteville Street, Suite 1100
Raleigh, NC 27601
PH: 919-334-3100 FX: 919-334-3122 www.jacobs.com
North Carolina Engineering Firm License No. F-287
North Carolina Architectural Firm Reg. No. 50757

AYERS SAINT GROSS

Consultants:
ARK Consulting Group, PLLC

Coaly Design
Landscape Architecture + Land Planning

Seals:
JOHN A. STEVERMER, NC LICENSE NO. 5858

General Notes:

Project Client:
CITY OF GREENVILLE

GREENVILLE TRANSPORTATION ACTIVITY CENTER
600 S. Pitt Street, Greenville, NC

Number	Description	Date
0	IFC	05-10-2016

Key Plan:

Project North

CAD File:

Project No.: L3005900

Copyright: 2015 Jacobs Engineering Group

Drawing Sheet Title:
OVERALL SECOND FLOOR PLAN

Drawing Sheet Number:
A-102

Owner's Drawing Sheet No.:

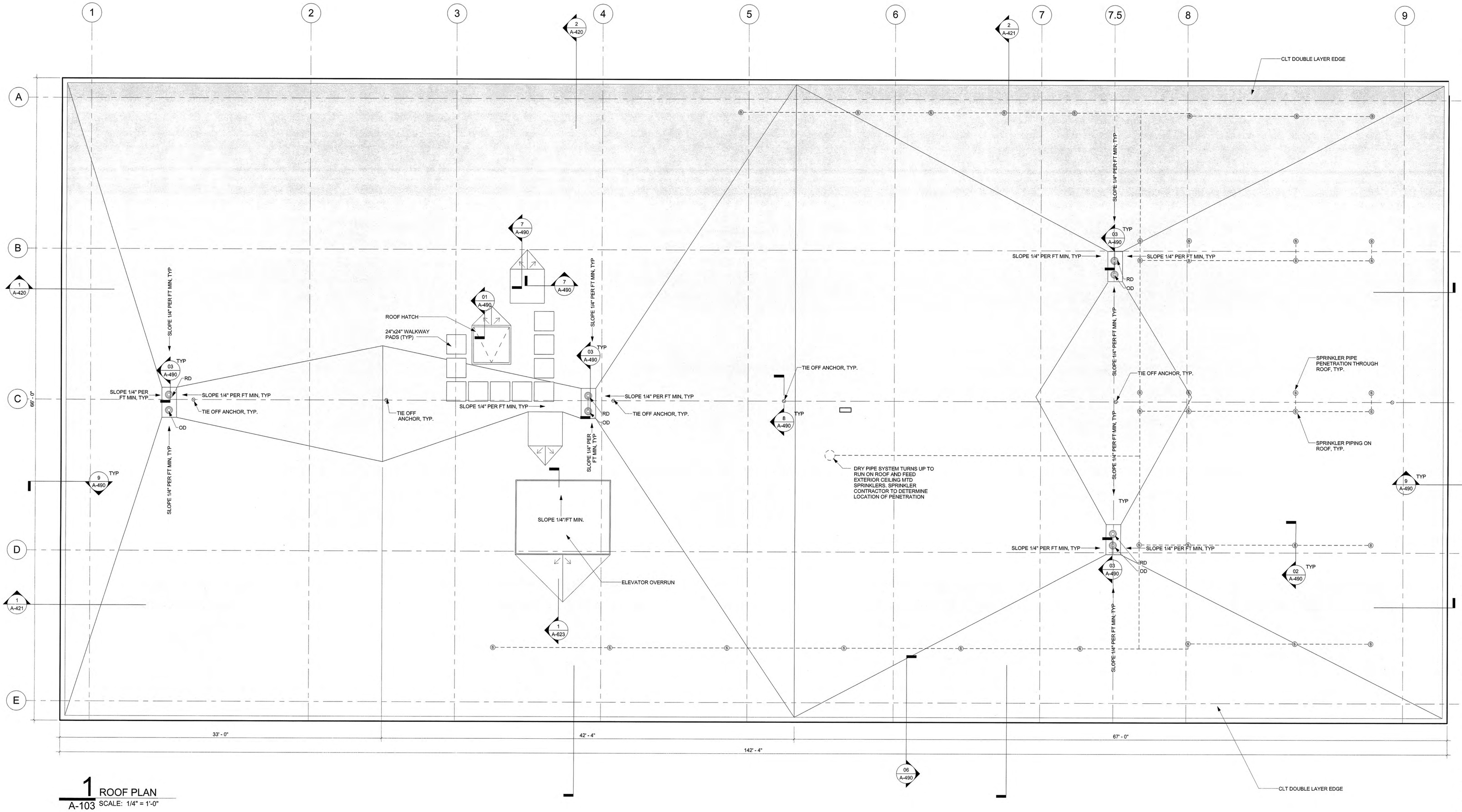

1 ROOF PLAN
A-103 SCALE: 1/4" = 1'-0"

Greenville
NORTH CAROLINA

JACOBS
333 Fayetteville Street, Suite 1100
Raleigh, NC 27601
PH: 919-334-3100 FX: 919-334-3122 www.jacobs.com
North Carolina Engineering Firm License No. F-287
North Carolina Architectural Firm Reg. No. 50757

AYERS SAINT GROSS

Consultants:
ARK Consulting Group, PLLC

Coaly Design
Landscape Architecture + Land Planning

Seals:
JOHN A. STEVERMER, NC LICENSE NO. 5858

General Notes:

ROOF GENERAL NOTES:

1. SHADED AREA INDICATE TAPERED INSULATION
2. SLOPE MUST BE AT LEAST 1/4" PER FOOT, TYP.

ROOF KEY NOTES:

1. COORDINATE WITH MECHANICAL AND STRUCUTRAL FOR ADDITONAL INFORMATION REGARDING ROOFTOP EQUIPMENT AND SAFETY SYSTEM.

Project Client:
CITY OF GREENVILLE

GREENVILLE TRANSPORTATION ACTIVITY CENTER
600 S. Pitt Street, Greenville, NC

Number	Description	Date
0	IFC	05-10-2016

Key Plan:
Project North

CAD File:
Project No.: L3005900
Copyright: 2015 Jacobs Engineering Group

Drawing Sheet Title:
OVERALL ROOF PLAN

Drawing Sheet Number:
A-103

Owner's Drawing Sheet No.:

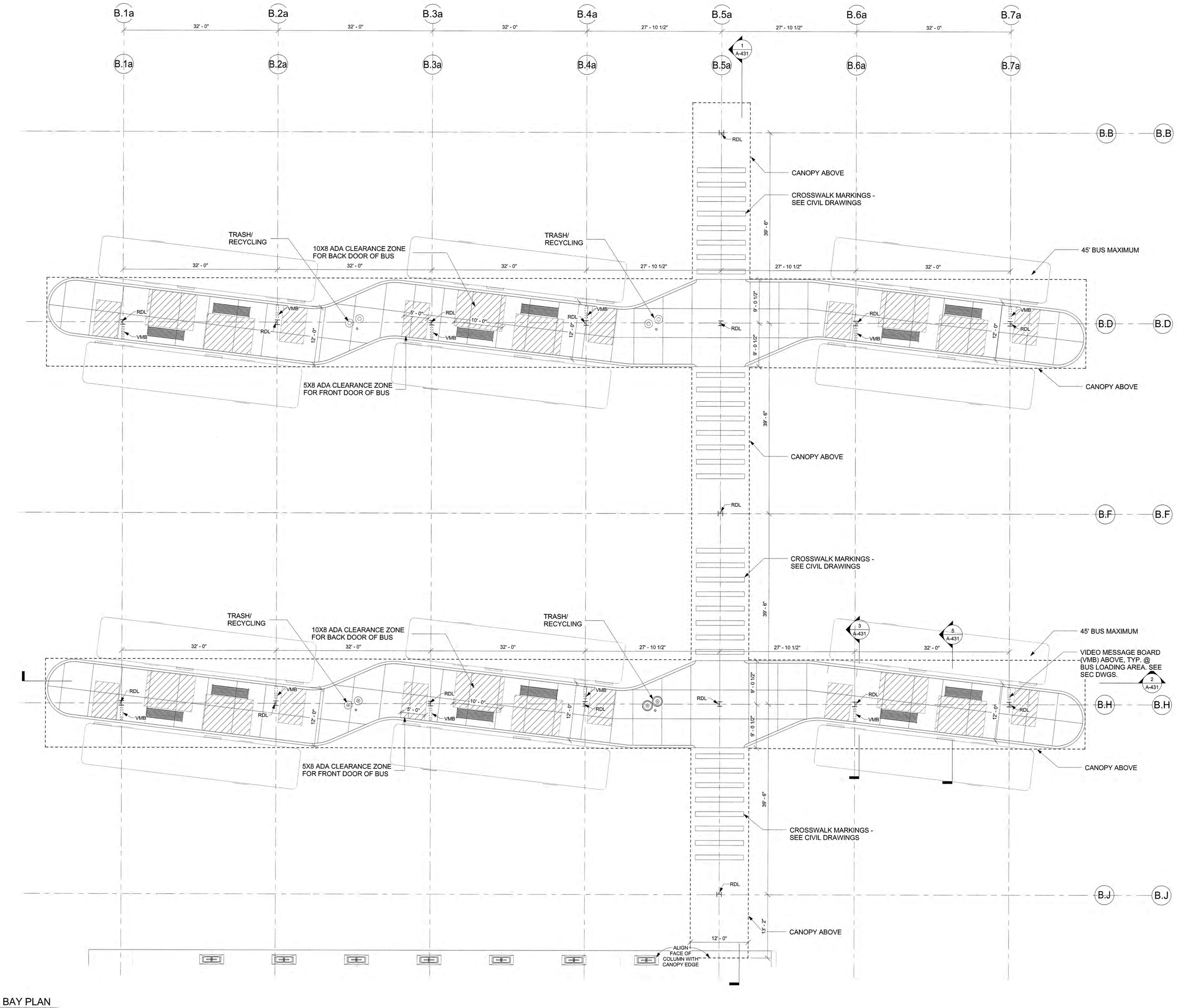

1 ENLARGED BUS BAY PLAN
A-104 SCALE: 1/8" = 1'-0"

Greenville
NORTH CAROLINA

JACOBS
333 Fayetteville Street, Suite 1100
Raleigh, NC 27601
PH: 919-334-3100 FX: 919-334-3122 www.jacobs.com
North Carolina Engineering Firm License No. F-287
North Carolina Architectural Firm Reg. No. 50757

AYERS SAINT GROSS

Consultants:
ARK Consulting Group, PLLC

Coaly Design
Landscape Architecture + Land Planning

Seals:

JOHN A. STEVERMER, NC LICENSE NO. 5858

General Notes:
SYMBOLS LEGEND:

	CLEAR ZONE FOR BUS PASSENGER UNLOADING/LOADING
	TRASH CAN
	5'x18" BENCH
	AV DISPLAY BOARD
	ROOF DRAIN DOWNSPOUT

NOTES:

1. CLEAR ZONE FOR BUS PASSENGER LOADING IS FOR REFERENCE ONLY TO DIMENSION FURNITURE - DOES NOT REPRESENT PHYSICAL ELEMENTS

2. ALL EXPOSED STRUCTURAL STEEL FRAMING TO RECEIVE HIGH PERFORMANCE COATINGS, SEE DIVISION 9.

3. REFER TO DRAWING A-901 FOR FURNITURE

Project Client:
CITY OF GREENVILLE

GREENVILLE TRANSPORTATION ACTIVITY CENTER
600 S. Pitt Street, Greenville, NC

Number	Description	Date
0	IFC	05-10-2016

Key Plan: Project North

CAD File:
Project No.: L3005900
Copyright: 2015 Jacobs Engineering Group

Drawing Sheet Title:
ENLARGED BUS BAY PLAN

Drawing Sheet Number:
A-104

Owner's Drawing Sheet No.:

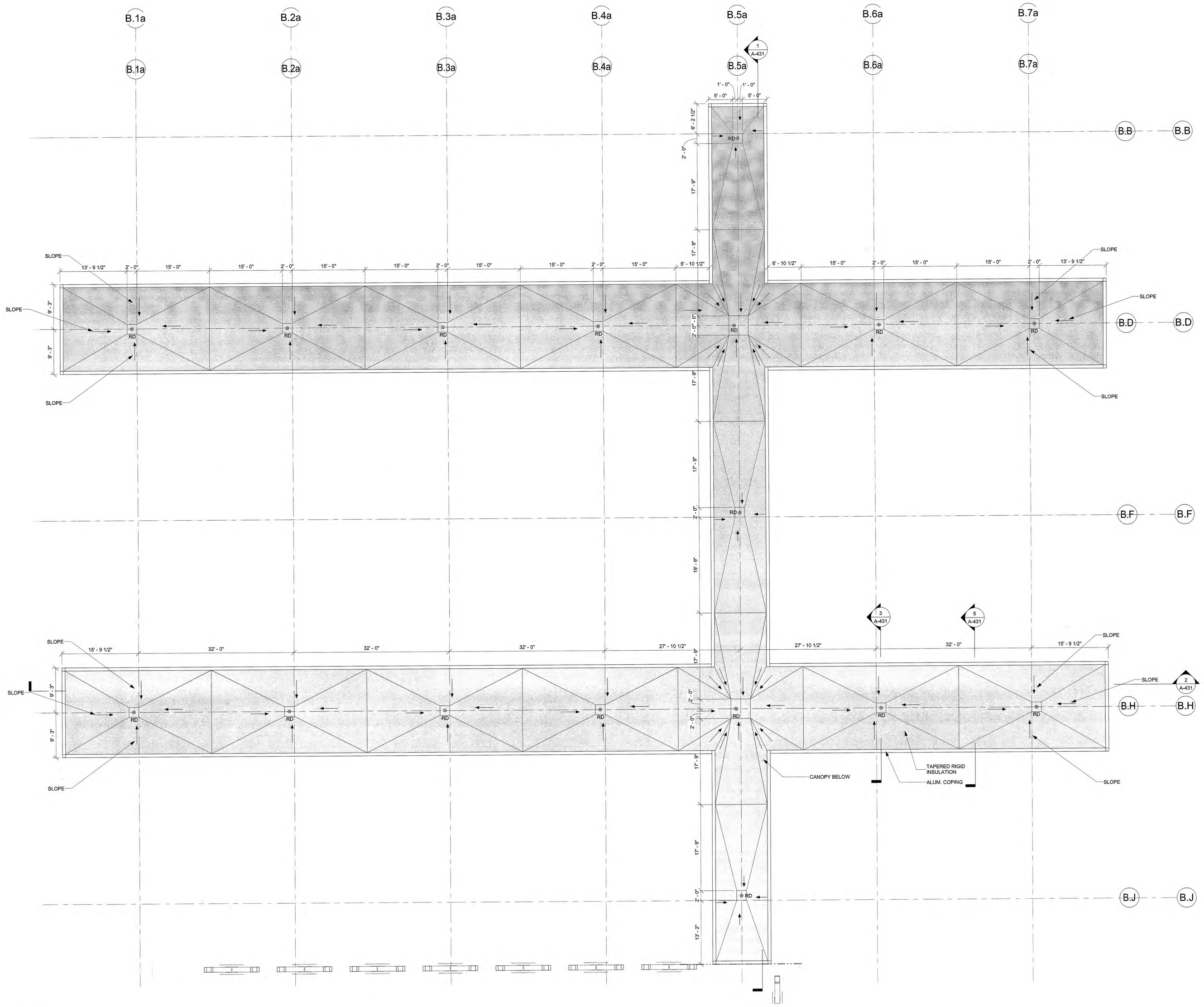

1 BUS BAY ROOF PLAN
A-105 SCALE: 1/8" = 1'-0"

Greenville
NORTH CAROLINA

JACOBS
333 Fayetteville Street, Suite 1100
Raleigh, NC 27601
PH: 919-334-3100 FX: 919-334-3122 www.jacobs.com
North Carolina Engineering Firm License No. F-287
North Carolina Architectural Firm Reg. No. 50757

AYERS SAINT GROSS

Consultants:
ARK Consulting Group, PLLC
Coaly Design
Landscape Architecture + Land Planning

Seals:

JOHN A. STEVERMER, NC LICENSE NO. 5858

General Notes:

ROOF GENERAL NOTES:

1. SHADED AREA INDICATE TAPERED INSULATION
2. SLOPE MUST BE AT LEAST 1/4" PER FOOT, TYP.

Project Client:
CITY OF GREENVILLE

GREENVILLE TRANSPORTATION ACTIVITY CENTER
600 S. Pitt Street, Greenville, NC

Number	Description	Date
0	IFC	05-10-2016

Key Plan: Project North

CAD File:
Project No.: L3005900
Copyright: 2015 Jacobs Engineering Group

Drawing Sheet Title:
ENLARGED BUS BAY ROOF PLAN

Drawing Sheet Number:
A-105

Owner's Drawing Sheet No.:

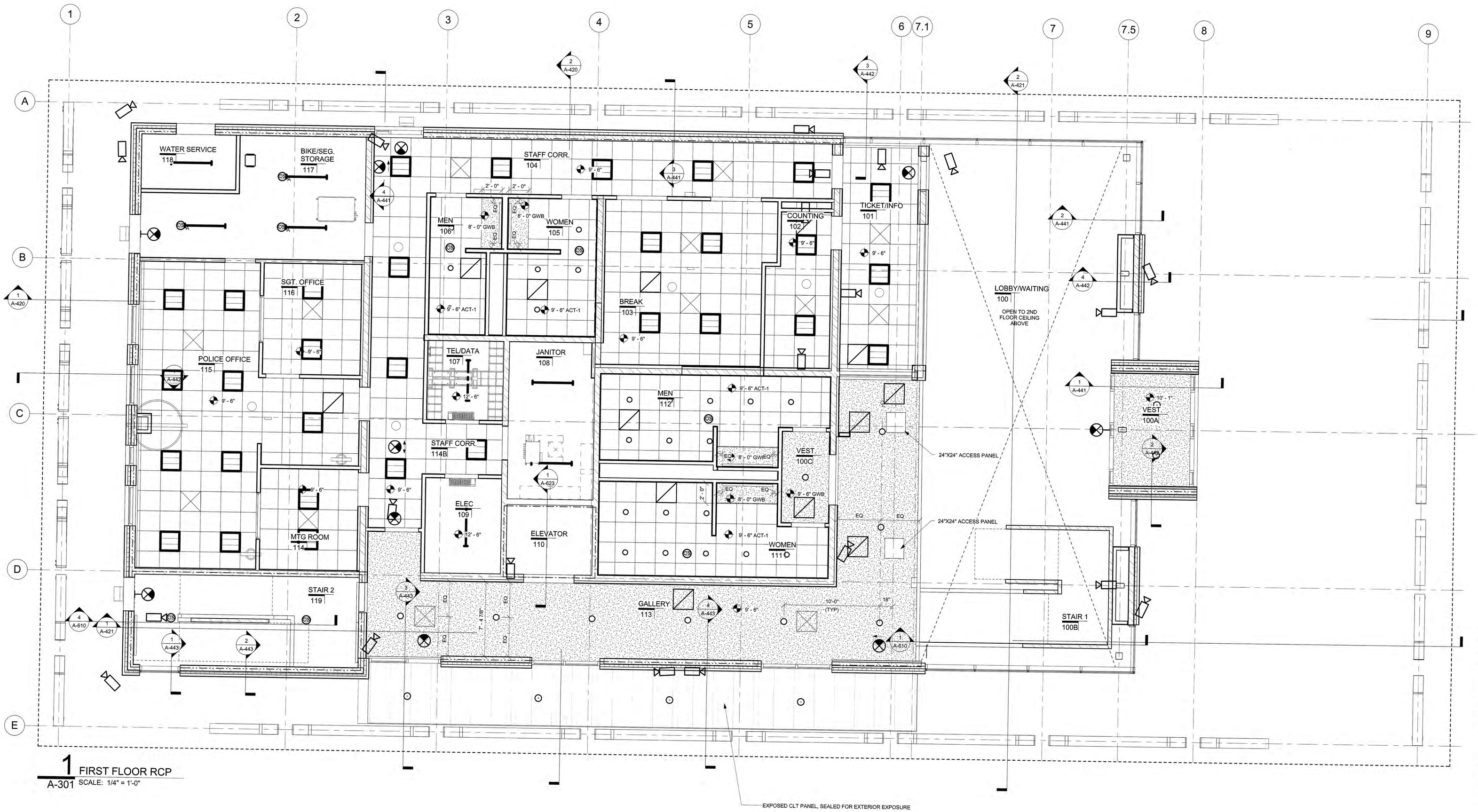

1 FIRST FLOOR RCP
A-301 SCALE: 1/4" = 1'-0"

REFLECTED CEILING PLAN GENERAL NOTES

1. NOT USED
2. CEILINGS IN ALL AREAS UNDER CONTRACT TO BE INSTALLED IN STRICT ACCORDANCE WITH MANUFACTURERS' SPECIFICATIONS, LOCAL BUILDING CODES AND ALL OTHER APPLICABLE CODES. PROVIDE LATERAL BRACING AS REQUIRED.
3. VERIFY ALL CEILING HEIGHTS AND CEILING PLENUM CLEARANCES TO ASSURE FINISHED CEILING HEIGHTS CALLED OUT ON DOCUMENTS. ANY DISCREPANCIES SHALL BE BROUGHT TO ARCHITECT'S ATTENTION IMMEDIATELY, PRIOR TO COMMENCEMENT OF WORK.
4. ANY CONFLICTS OR DISCREPANCIES AMONG FIXTURES, FIRE AND SMOKE DETECTION DEVICES, HVAC OR OTHER CONDITIONS SHALL BE BROUGHT TO THE ATTENTION OF ARCHITECT FOR CLARIFICATION.
5. COORDINATE LIGHTING REQUIREMENTS OF FIXTURES MOUNTED WITHIN ARCHITECTURAL WOODWORK FOR LOCATION, POWER REQUIREMENTS AND ATTACHMENTS.
6. ALL FIXTURE DIMENSIONS ARE TO CENTERLINE OF FIXTURE, UNLESS NOTED OTHERWISE.
7. ALL FIXTURE DIMENSIONS ARE TO CENTERLINE OF FIXTURE, UNLESS NOTED OTHERWISE.
8. ALL CEILING GRIDS TO BE CENTERED IN SPACES WITH EQUAL TILES AT OPPOSITE SIDES AS SHOWN UNLESS NOTED OTHERWISE.
9. ALL CEILING FIXTURES TO BE CENTERED ON LAY-IN PANELS IN SUSPENDED CEILING AREAS AS SHOWN, UNLESS NOTED OTHERWISE.
10. PROVIDE ADDITIONAL BLOCKING AND/OR ANCHORING ABOVE CEILINGS AS REQUIRED FOR SUPPORT OF LIGHT FIXTURES.
11. ALL CEILING HEIGHTS ARE INDICATED AS AFF OF RAISED AND POURED FLOOR HEIGHTS
12. ALL SUPPLY AND RETURN GRILLES AND DIFFUSERS AT GWB CEILINGS TO BE LINEAR DIFFUSERS TO ALIGN WITH ADJACENT LIGHT FIXTURES OR CEILING FEATURES. PROVIDE DUMMY GRILLES AS REQUIRED TO YIELD CONTINUOUS APPEARANCE. FINISH INSIDE OF ACTIVE AND DUMMY GRILLES AND ANY DUCTWORK OR FRAMINGIN VIEW FROM BELOW MATTE WHITE. FINAL LOCATIONS AND LENGTHS TO BE REVIEWED WITH ARCHITECT PRIOR TO FRAMING.
13. EXPOSED GLU-LAM AND CLT PANELS TO RECEIVE HIGH PERFORMANCE COATING SEE DIVISION 09.
14. NOT USED.
15. GC TO COORDINATE INSTALLATION OF PROJECTOR AND PROJECTION SCREEN WITH MANUFACTURER RECOMMENDATIONS. GC TO ENSURE THAT NO GAPS ARE LEFT AT OPENING FOR SCREEN.
16. ALL EXPOSED CONDUIT, BOXES AND PIPING IN EXPOSED CLT CEILING AREAS TO BE PAINTED.
17. EXTERIOR EXPOSED CONDUIT, BOXES AND PIPING TO RECEIVE HIGH PERFORMANCE COATING - SEE DIVISION 09.

REFLECTED CEILING PLANS

NOTE: SEE LIGHT FIXTURE SCHEDULE AT ELECTRICAL ENGINEERING DRAWINGS FOR ADDITIONAL INFO

SYMBOLS LEGEND:

	2x2 ACT CEILING (ACT-1), TYP
	EXPOSED CLT PANEL, TYP
	LED 2X2 LAY-IN FIXTURE
	LED LINEAR LIGHT FIXTURE, HORIZ.
	LED LINEAR LIGHT FIXTURE, VERT.
	LED DOWN LIGHT SURFACE MOUNTED
	LED RECESSED CAN
	DECORATIVE PENDANT
	WALL MOUNTED LIGHT FIXTURE
	LED EXIT SIGNAGE
	CEILING MOUNTED SPRINKLER HEAD
	SUPPLY AIR DIFFUSERS SEE ENGINEERING DRAWINGS
	RETURN AIR DIFFUSERS SEE ENGINEERING DRAWINGS
9'-0"	CEILING ELEVATION ABOVE FINISHED FLOOR
	CEILING MOUNTED FAN
	LIGHTING CONDUIT
	SPRINKLER PIPING (ON ROOF)

Greenville
NORTH CAROLINA

JACOBS
333 Fayetteville Street, Suite 1100
Raleigh, NC 27601
PH: 919-334-3100 FX: 919-334-3122 www.jacobs.com
North Carolina Engineering Firm License No. F-287
North Carolina Architectural Firm Reg. No. 50757

AYERS SAINT GROSS

Consultants:
ARK Consulting Group, PLLC
Coaly Design
Landscape Architecture + Land Planning

Seals:

JOHN A. STEVERMER, NC LICENSE NO. 5858

General Notes:

Project Client:
CITY OF GREENVILLE

GREENVILLE TRANSPORTATION ACTIVITY CENTER
600 S. Pitt Street, Greenville, NC

Number	Description	Date
0	IFC	05-10-2016

Key Plan:

Project North

CAD File:
Project No.: L3005900
Copyright: 2015 Jacobs Engineering Group

Drawing Sheet Title:
RCP - FIRST FLOOR

Drawing Sheet Number:
A-301

Owner's Drawing Sheet No.:

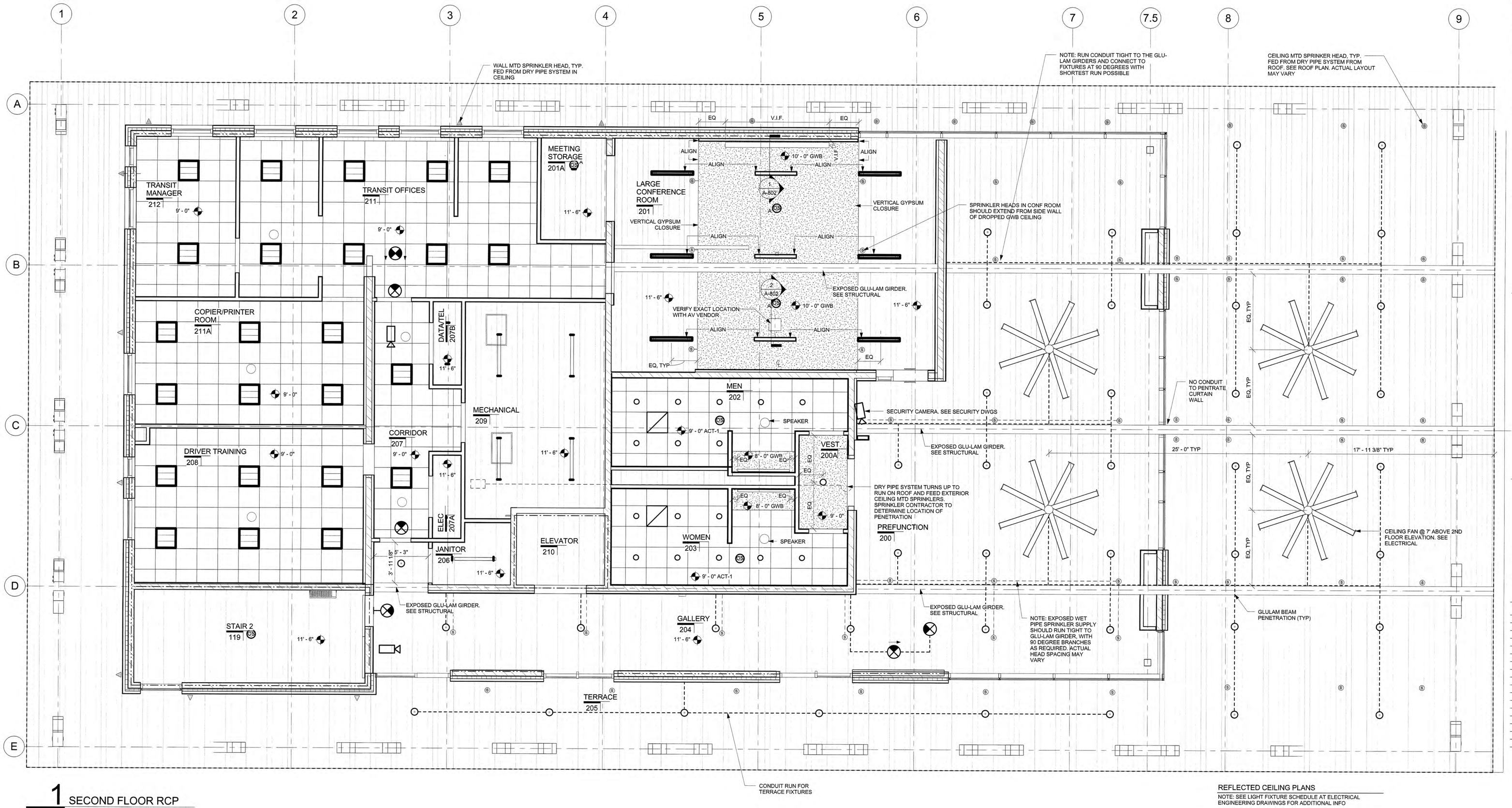

1 SECOND FLOOR RCP
A-302 SCALE: 1/4" = 1'-0"

REFLECTED CEILING PLAN GENERAL NOTES

1. NOT USED
2. CEILINGS IN ALL AREAS UNDER CONTRACT TO BE INSTALLED IN STRICT ACCORDANCE WITH MANUFACTURERS' SPECIFICATIONS, LOCAL BUILDING CODES AND ALL OTHER APPLICABLE CODES. PROVIDE LATERAL BRACING AS REQUIRED.
3. VERIFY ALL CEILING HEIGHTS AND CEILING PLENUM CLEARANCES TO ASSURE FINISHED CEILING HEIGHTS CALLED OUT ON DOCUMENTS. ANY DISCREPANCIES SHALL BE BROUGHT TO ARCHITECT'S ATTENTION IMMEDIATELY, PRIOR TO COMMENCEMENT OF WORK.
4. ANY CONFLICTS OR DISCREPANCIES AMONG FIXTURES, FIRE AND SMOKE DETECTION DEVICES, HVAC OR OTHER CONDITIONS SHALL BE BROUGHT TO THE ATTENTION OF ARCHITECT FOR CLARIFICATION.
5. COORDINATE LIGHTING REQUIREMENTS OF FIXTURES MOUNTED WITHIN ARCHITECTURAL WOODWORK FOR LOCATION, POWER REQUIREMENTS AND ATTACHMENTS.
6. ALL FIXTURE DIMENSIONS ARE TO CENTERLINE OF FIXTURE, UNLESS NOTED OTHERWISE.
7. ALL FIXTURE DIMENSIONS ARE TO CENTERLINE OF FIXTURE, UNLESS NOTED OTHERWISE.
8. ALL CEILING GRIDS TO BE CENTERED IN SPACES WITH EQUAL TILES AT OPPOSITE SIDES AS SHOWN UNLESS NOTED OTHERWISE.
9. ALL CEILING FIXTURES TO BE CENTERED ON LAY-IN PANELS IN SUSPENDED CEILING AREAS AS SHOWN, UNLESS NOTED OTHERWISE.
10. PROVIDE ADDITIONAL BLOCKING AND/OR ANCHORING ABOVE CEILINGS AS REQUIRED FOR SUPPORT OF LIGHT FIXTURES.
11. ALL CEILING HEIGHTS ARE INDICATED AS AFF OF RAISED AND POURED FLOOR HEIGHTS.
12. ALL SUPPLY AND RETURN GRILLES AND DIFFUSERS AT GWB CEILINGS TO BE LINEAR DIFFUSERS TO ALIGN WITH ADJACENT LIGHT FIXTURES OR CEILING FEATURES. PROVIDE DUMMY GRILLES AS REQUIRED TO YIELD CONTINUOUS APPEARANCE. FINISH INSIDE OF ACTIVE AND DUMMY GRILLES AND ANY DUCTWORK OR FRAMINGIN VIEW FROM BELOW MATTE WHITE. FINAL LOCATIONS AND LENGTHS TO BE REVIEWED WITH ARCHITECT PRIOR TO FRAMING.
13. EXPOSED GLU-LAM AND CLT PANELS TO RECEIVE HIGH PERFORMANCE COATING SEE DIVISION 09.
14. NOT USED.
15. GC TO COORDINATE INSTALLATION OF PROJECTOR AND PROJECTION SCREEN WITH MANUFACTURER RECOMMENDATIONS. GC TO ENSURE THAT NO GAPS ARE LEFT AT OPENING FOR SCREEN.
16. ALL EXPOSED CONDUIT, BOXES AND PIPING IN EXPOSED CLT CEILING AREAS TO BE PAINTED.
17. EXTERIOR EXPOSED CONDUIT, BOXES AND PIPING TO RECEIVE HIGH PERFORMANCE COATING - SEE DIVISION 09.

REFLECTED CEILING PLANS

NOTE: SEE LIGHT FIXTURE SCHEDULE AT ELECTRICAL ENGINEERING DRAWINGS FOR ADDITIONAL INFO

SYMBOLS LEGEND:

	2x2 ACT CEILING (ACT-1), TYP
	EXPOSED CLT PANEL, TYP
	LED 2X2 LAY-IN FIXTURE
	LED LINEAR LIGHT FIXTURE, HORIZ.
	LED LINEAR LIGHT FIXTURE, VERT.
	LED DOWN LIGHT SURFACE MOUNTED
	LED RECESSED CAN
	DECORATIVE PENDANT
	WALL MOUNTED LIGHT FIXTURE
	LED EXIT SIGNAGE
	CEILING MOUNTED SPRINKLER HEAD
	SUPPLY AIR DIFFUSERS SEE ENGINEERING DRAWINGS
	RETURN AIR DIFFUSERS SEE ENGINEERING DRAWINGS
9'-0"	CEILING ELEVATION ABOVE FINISHED FLOOR
	CEILING MOUNTED FAN
	LIGHTING CONDUIT
	SPRINKLER PIPING (ON ROOF)

Greenville
NORTH CAROLINA

JACOBS
333 Fayetteville Street, Suite 1100
Raleigh, NC 27601
PH: 919-334-3100 FX: 919-334-3122 www.jacobs.com
North Carolina Engineering Firm License No. F-287
North Carolina Architectural Firm Reg. No. 50757

AYERS SAINT GROSS

Consultants:
ARK Consulting Group, PLLC

Coaly Design
Landscape Architecture + Land Planning

Seals:

JOHN A. STEVERMER, NC LICENSE NO. 5858

General Notes:

Project Client:
CITY OF GREENVILLE

GREENVILLE TRANSPORTATION ACTIVITY CENTER
600 S. Pitt Street, Greenville, NC

Number	Description	Date
0	IFC	05-10-2016

Key Plan:

Project North

CAD File:
Project No.: L3005900
Copyright: 2015 Jacobs Engineering Group

Drawing Sheet Title:
RCP - SECOND FLOOR

Drawing Sheet Number:
A-302

Owner's Drawing Sheet No.:

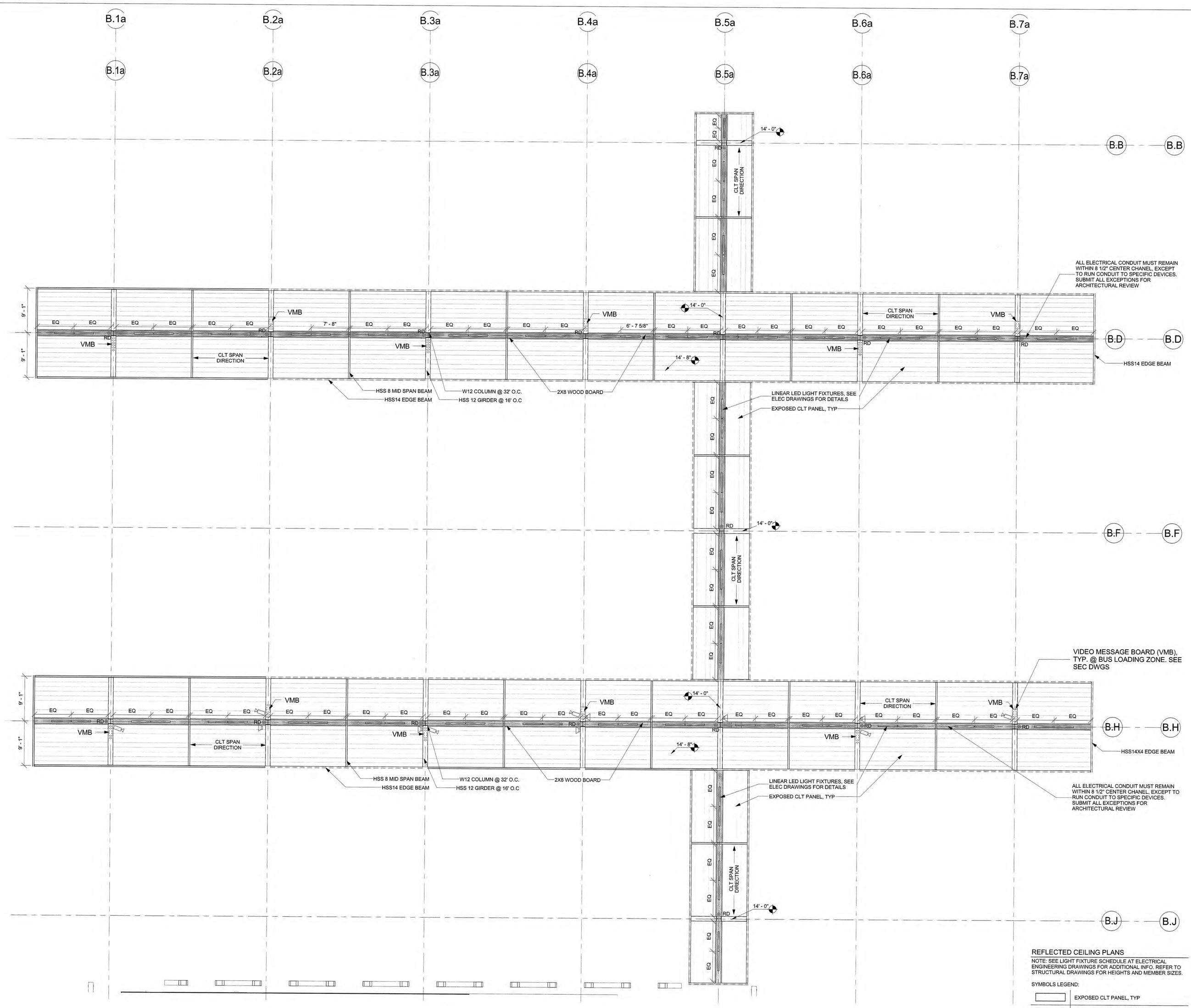

1 CANOPY RCP
A-303 SCALE: 1/8" = 1'-0"

REFLECTED CEILING PLAN GENERAL NOTES:

1. NOT USED
2. ANY CONFLICTS OR DISCREPANCIES AMONG FIXTURES, FIRE AND SMOKE DETECTION DEVICES, HVAC OR OTHER CONDITIONS SHALL BE BROUGHT TO THE ATTENTION OF ARCHITECT FOR CLARIFICATION.
3. ALL FIXTURE DIMENSIONS ARE TO CENTERLINE OF FIXTURE, UNLESS NOTED OTHERWISE.

REFLECTED CEILING PLANS

NOTE: SEE LIGHT FIXTURE SCHEDULE AT ELECTRICAL ENGINEERING DRAWINGS FOR ADDITIONAL INFO. REFER TO STRUCTURAL DRAWINGS FOR HEIGHTS AND MEMBER SIZES.

SYMBOLS LEGEND:

	EXPOSED CLT PANEL, TYP
	LED LINEAR LIGHT FIXTURE, HORIZ.
	LED LINEAR LIGHT FIXTURE, VERT.
	LED DOWN LIGHT
	LED RECESSED CAN
	DECORATIVE PENDANT
	WALL MOUNTED LIGHT FIXTURE
	LED EXIT SIGNAGE
	CEILING MOUNTED SPRINKLER HEAD
9'-0"	CEILING ELEVATION ABOVE FINISHED FLOOR
	CAMERA, SEE ELECTRICAL
	SPEAKER, SEE ELECTRICAL

Greenville
NORTH CAROLINA

JACOBS
333 Fayetteville Street, Suite 1100
Raleigh, NC 27601
PH: 919-334-3100 FX: 919-334-3122 www.jacobs.com
North Carolina Engineering Firm License No. F-287
North Carolina Architectural Firm Reg. No. 50757

AYERS SAINT GROSS

Consultants:
ARK Consulting Group, PLLC

Coaly Design
Landscape Architecture + Land Planning

Seals:

JOHN A. STEVERMER
REGISTERED LANDSCAPE ARCHITECT
5858
03-09-16
NORTH CAROLINA
DURHAM, N.C.

JOHN A. STEVERMER, NC LICENSE NO. 5858

General Notes:

RCP KEY NOTES:

1. REFER TO STRUC. DRAWINGS FOR HEIGHTS + MEMBER SIZES
2. FINISHED FLOOR IN THIS CASE REFERS TO FINISHED FACE OF BUS ISLAND CONCRETE SLAB
3. ALL ELECTRICAL CONDUIT/PLUMBING MUST REMAIN WITHIN 8 1/2" CENTER CHANNEL, EXCEPT TO RUN CONDUIT TO SPECIFIC DEVICES. SUBMIT ALL EXCEPTIONS FOR ARCHITECTURAL REVIEW
4. 4' LED LIGHT FIXTURES (x2) OR 8' CONT. FIXTURE TO BE CENTERED IN EACH BAY BETWEEN FACE OF BEAMS
5 EXPOSTED CLT TO RECEIVE HIGH PERFORMANCE COATING - SEE DIVISION 9.
6. ALL EXPOSED STEEL CONDUIT AND BOXES TO RECEIVE HIGH PERFORMANCE COATING - SEE DIVISION 9.

Project Client:
CITY OF GREENVILLE

GREENVILLE TRANSPORTATION ACTIVITY CENTER
600 S. Pitt Street, Greenville, NC

Number	Description	Date
0	IFC	05-10-2016

Key Plan:

Project North

CAD File:
Project No.: L3005900
Copyright: 2015 Jacobs Engineering Group

Drawing Sheet Title:
RCP - BUS CANOPIES

Drawing Sheet Number:
A-303

Owner's Drawing Sheet No.:

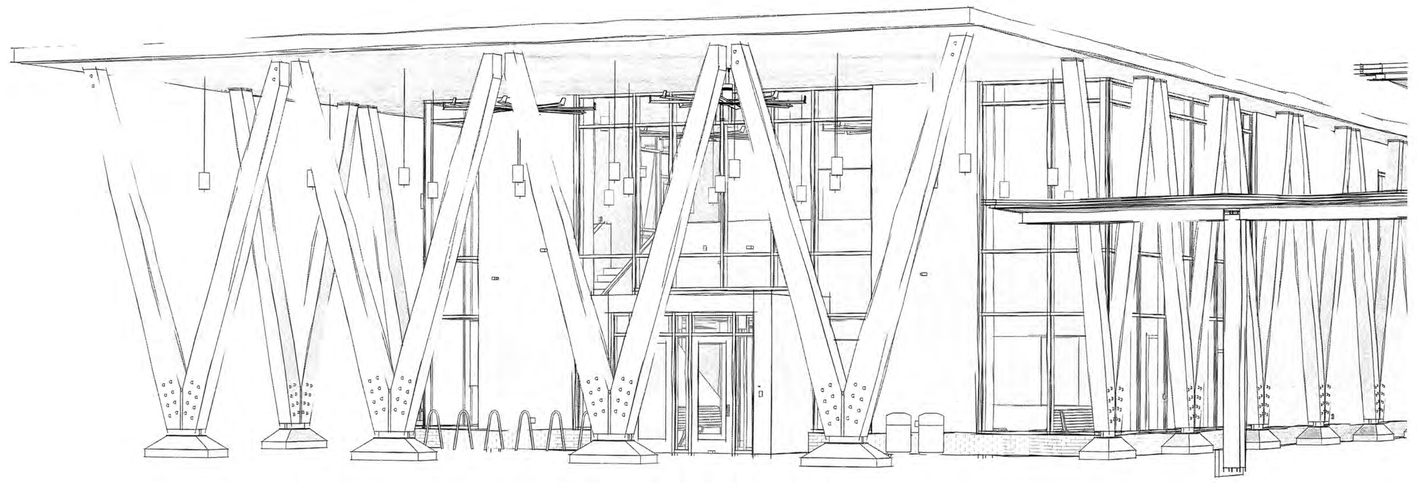

1 View from Pitt St.
A-400

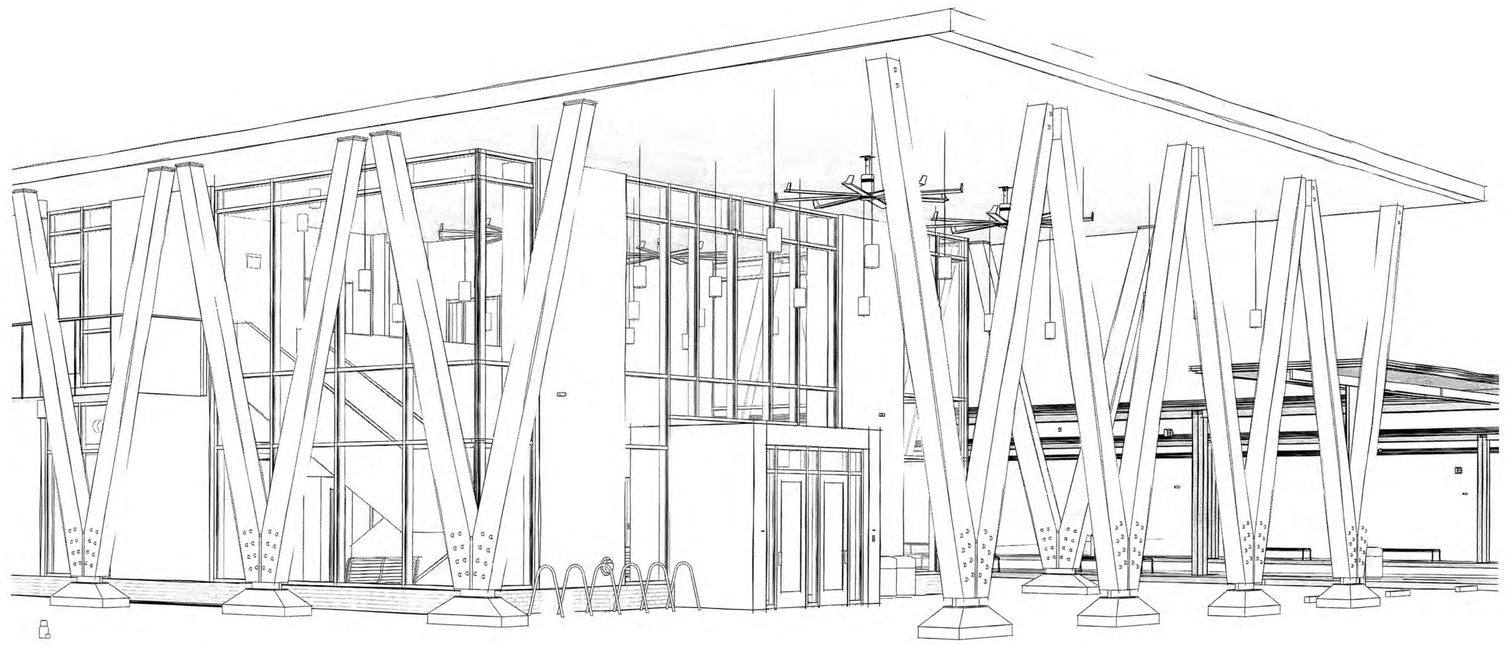

2 View from S.Pitt/SE
A-400

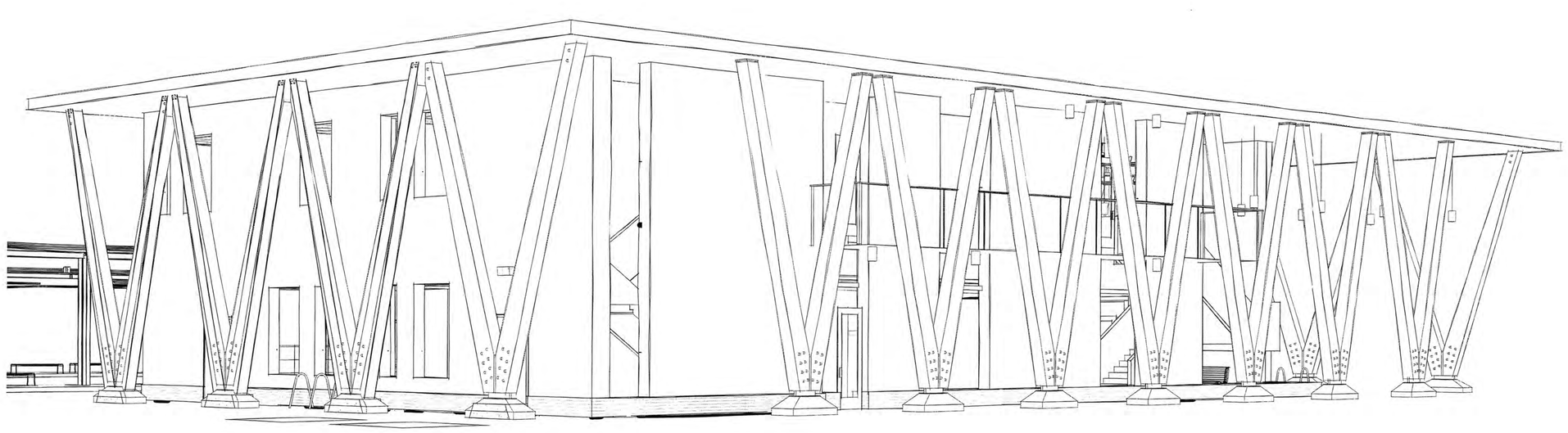

3 View from Clark St.
A-400

Greenville
NORTH CAROLINA

JACOBS
333 Fayetteville Street, Suite 1100
Raleigh, NC 27601
PH: 919-334-3100 FX: 919-334-3122 www.jacobs.com
North Carolina Engineering Firm License No. F-287
North Carolina Architectural Firm Reg. No. 50757

AYERS SAINT GROSS

Consultants:
ARK Consulting Group, PLLC
Coaly Design
Landscape Architecture + Land Planning

Seals:

JOHN A. STEVERMER, NC LICENSE NO. 5858

General Notes:

Project Client:
CITY OF GREENVILLE

GREENVILLE
TRANSPORTATION
ACTIVITY CENTER
600 S. Pitt Street, Greenville, NC

Number	Description	Date
0	IFC	05-10-2016

Key Plan: Project North

CAD File:
Project No.: L3005900
Copyright: 2015 Jacobs Engineering Group

Drawing Sheet Title:
EXTERIOR 3D VIEWS

Drawing Sheet Number:
A-400

Owner's Drawing Sheet No.:

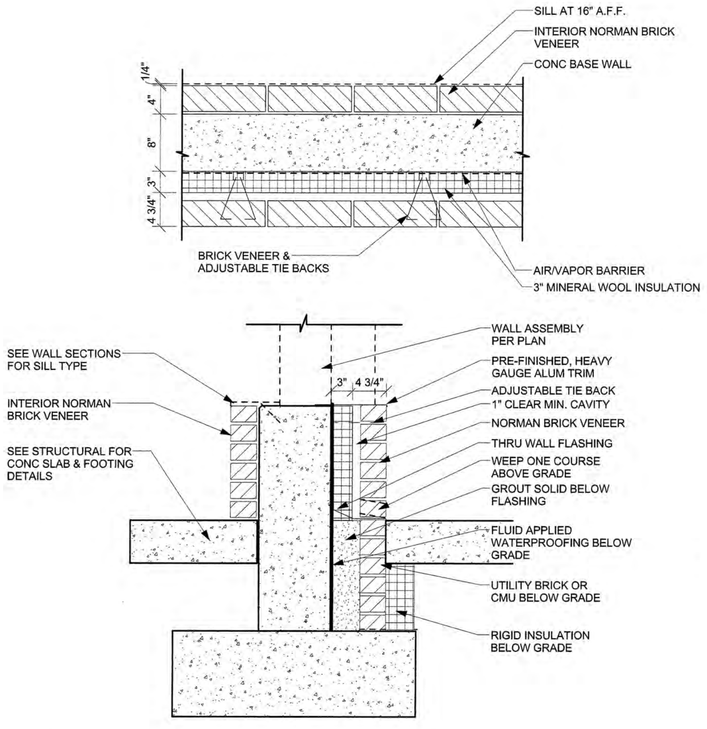

01 BRICK ON CONC WALL BASE ASSEMBLY
A-402 SCALE: 1" = 1'-0"

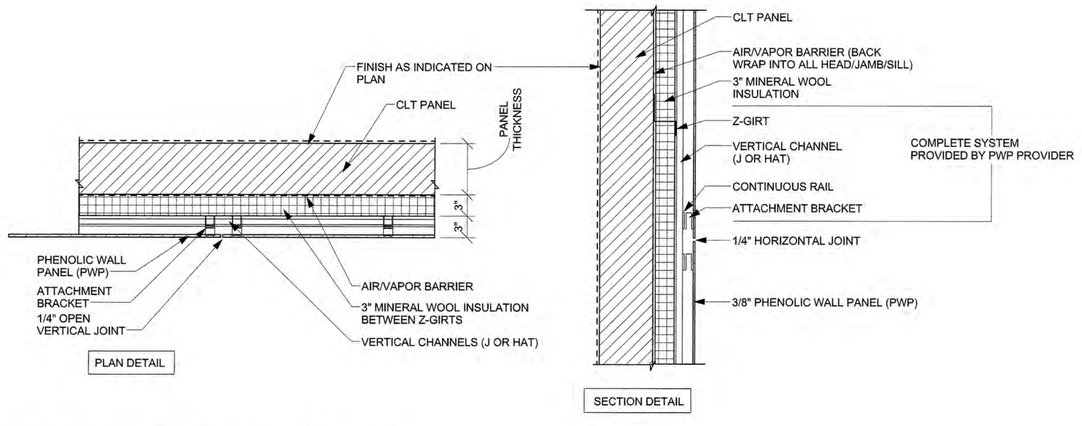

02 PHENOLIC WALL PANEL WALL ASSEMBLY
A-402 SCALE: 1" = 1'-0"

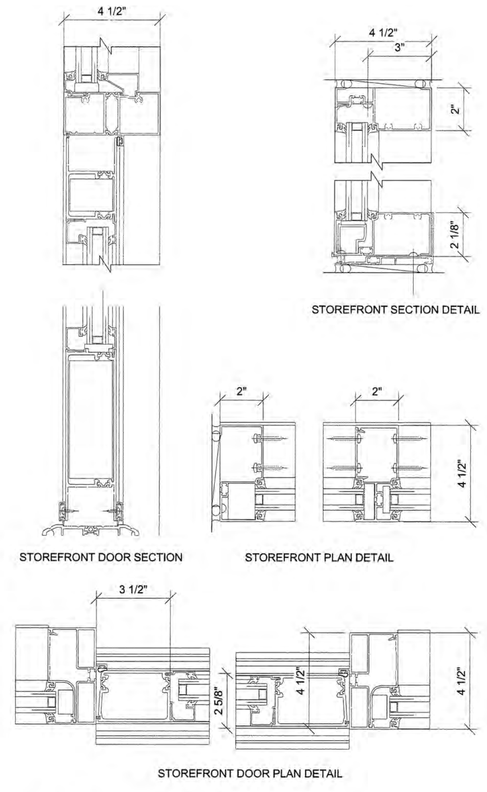

03 STOREFRONT ASSEMBLY DETAILS
A-402 SCALE: 3" = 1'-0"

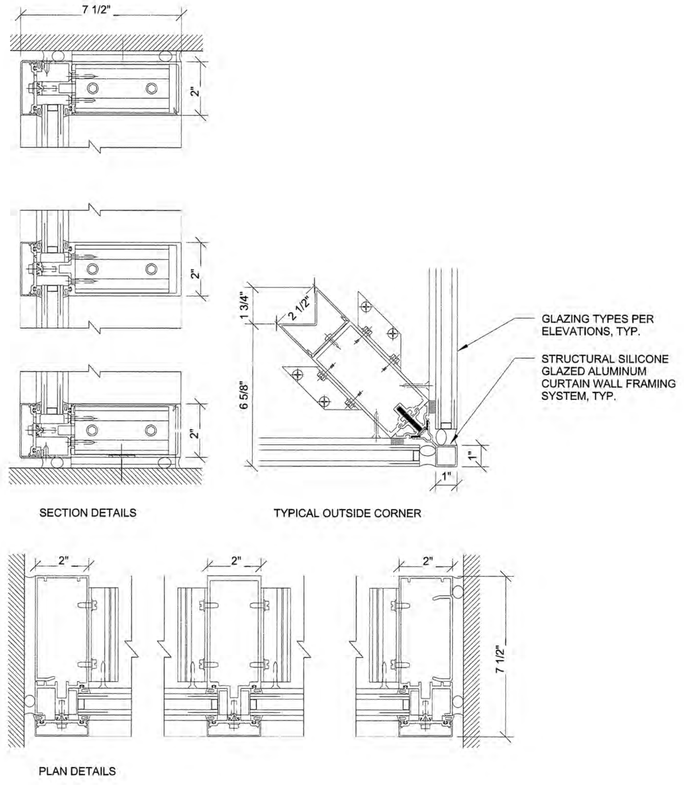

04 CURTAIN WALL ASSEMBLY DETAILS
A-402 SCALE: 3" = 1'-0"

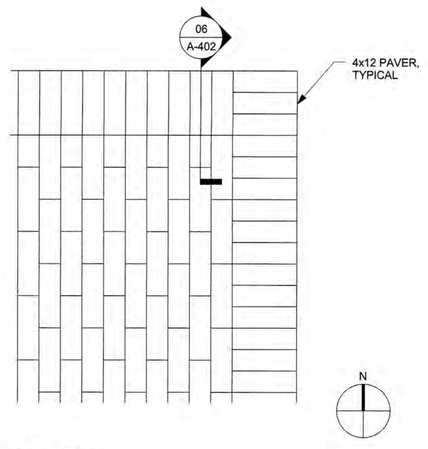

05 TYPICAL PAVING PATTERN
A-402 SCALE: 3/4" = 1'-0"

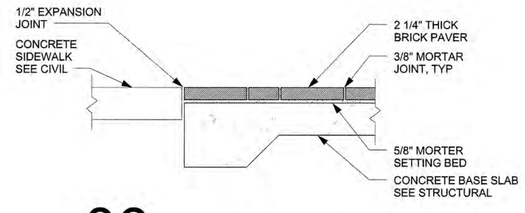

06 TYPICAL PAVING SECTION
A-402 SCALE: 3/4" = 1'-0"

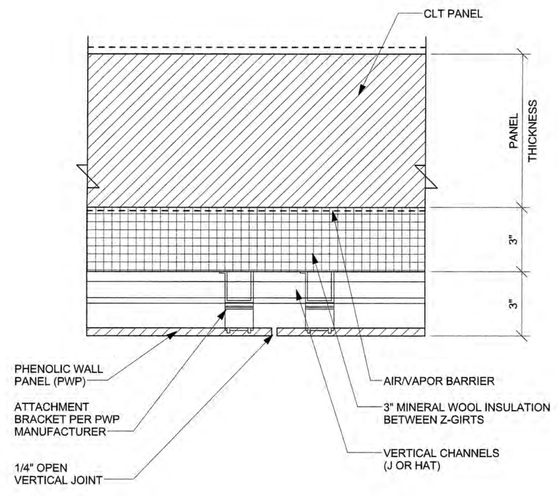

7 PANEL JOINT DETAIL
A-402 SCALE: 3" = 1'-0"

Greenville
NORTH CAROLINA

JACOBS
333 Fayetteville Street, Suite 1100
Raleigh, NC 27601
PH: 919-334-3100 FX: 919-334-3122 www.jacobs.com
North Carolina Engineering Firm License No. F-287
North Carolina Architectural Firm Reg. No. 50757

AYERS SAINT GROSS

Consultants:
ARK Consulting Group, PLLC

Coaly Design
Landscape Architecture + Land Planning

Seals:

JOHN A. STEVERMER, NC LICENSE NO. 5858

General Notes:

Project Client:
CITY OF GREENVILLE

GREENVILLE TRANSPORTATION ACTIVITY CENTER
600 S. Pitt Street, Greenville, NC

Number	Description	Date
0	IFC	05-10-2016

Key Plan: Project North

CAD File:
Project No.: L3005900
Copyright: 2015 Jacobs Engineering Group

Drawing Sheet Title:
EXTERIOR ENCLOSURE ASSEMBLIES

Drawing Sheet Number:
A-402

Owner's Drawing Sheet No.:

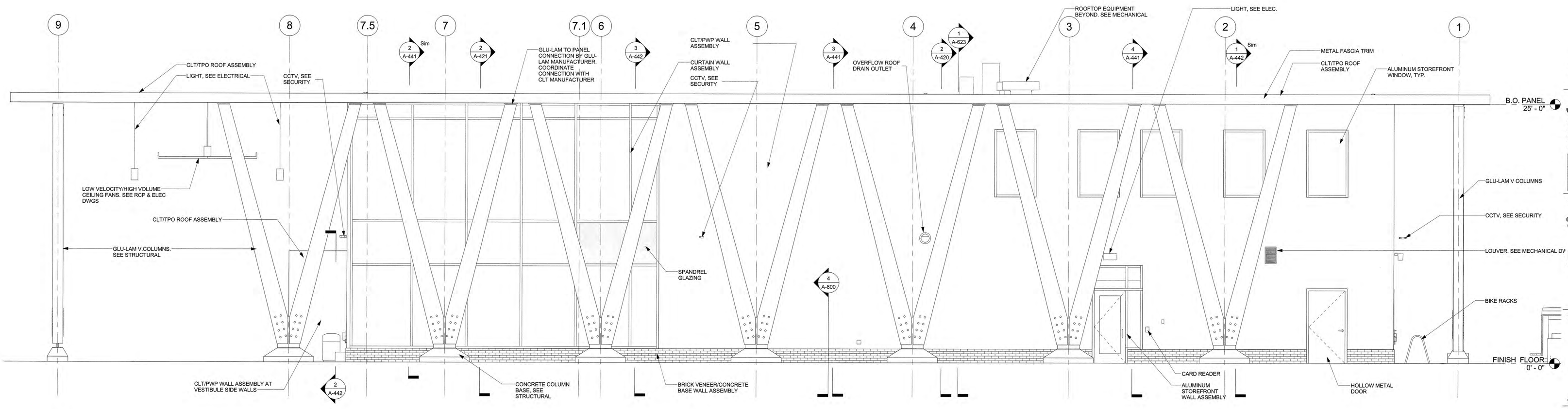

2 NORTH ELEVATION
A-410 SCALE: 1/4" = 1'-0"

NOTE: SEE SHEET A-413 FOR PHENOLIC WALL PANEL LAYOUT & CURTAIN WALL/STOREFRONT LAYOUT

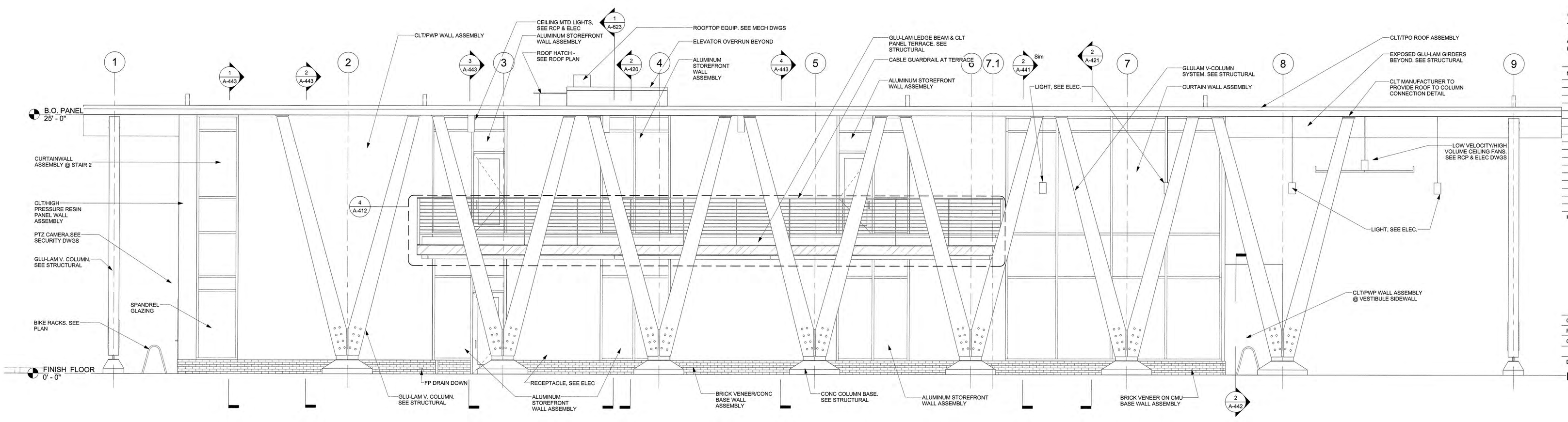

1 SOUTH ELEVATION
A-410 SCALE: 1/4" = 1'-0"

Greenville
NORTH CAROLINA

JACOBS
333 Fayetteville Street, Suite 1100
Raleigh, NC 27601
PH: 919-334-3100 FX: 919-334-3122 www.jacobs.com
North Carolina Engineering Firm License No. F-287
North Carolina Architectural Firm Reg. No. 50757

AYERS SAINT GROSS

Consultants:
ARK Consulting Group, PLLC
Coaly Design
Landscape Architecture + Land Planning

Seals:
JOHN A. STEVERMER CERTIFIED ARCHITECT 5858 NORTH CAROLINA DURHAM, N.C. 05-27-16

JOHN A. STEVERMER, NC LICENSE NO. 5858

General Notes:

Project Client:
CITY OF GREENVILLE

GREENVILLE TRANSPORTATION ACTIVITY CENTER
600 S. Pitt Street, Greenville, NC

Number	Description	Date
0	IFC	05-10-2016

Key Plan: Project North

CAD File:
Project No.: L3005900
Copyright: 2015 Jacobs Engineering Group

Drawing Sheet Title:
EXTERIOR ELEVATIONS

Drawing Sheet Number:
A-410

Owner's Drawing Sheet No.:

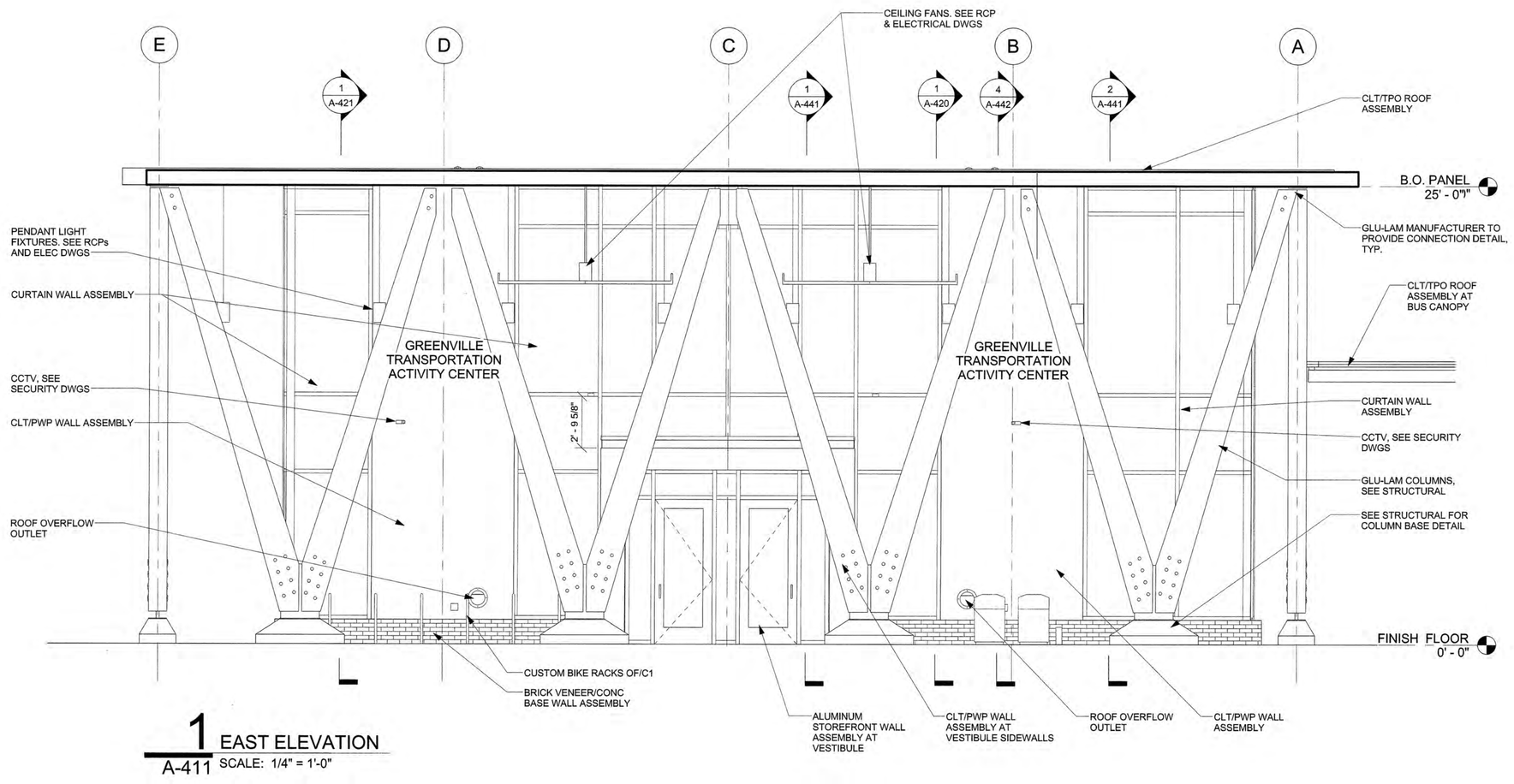

1 EAST ELEVATION
A-411 SCALE: 1/4" = 1'-0"

NOTE: SEE SHEET A-413 FOR PHENOLIC WALL PANEL LAYOUT & CURTAIN WALL/STOREFRONT LAYOUT

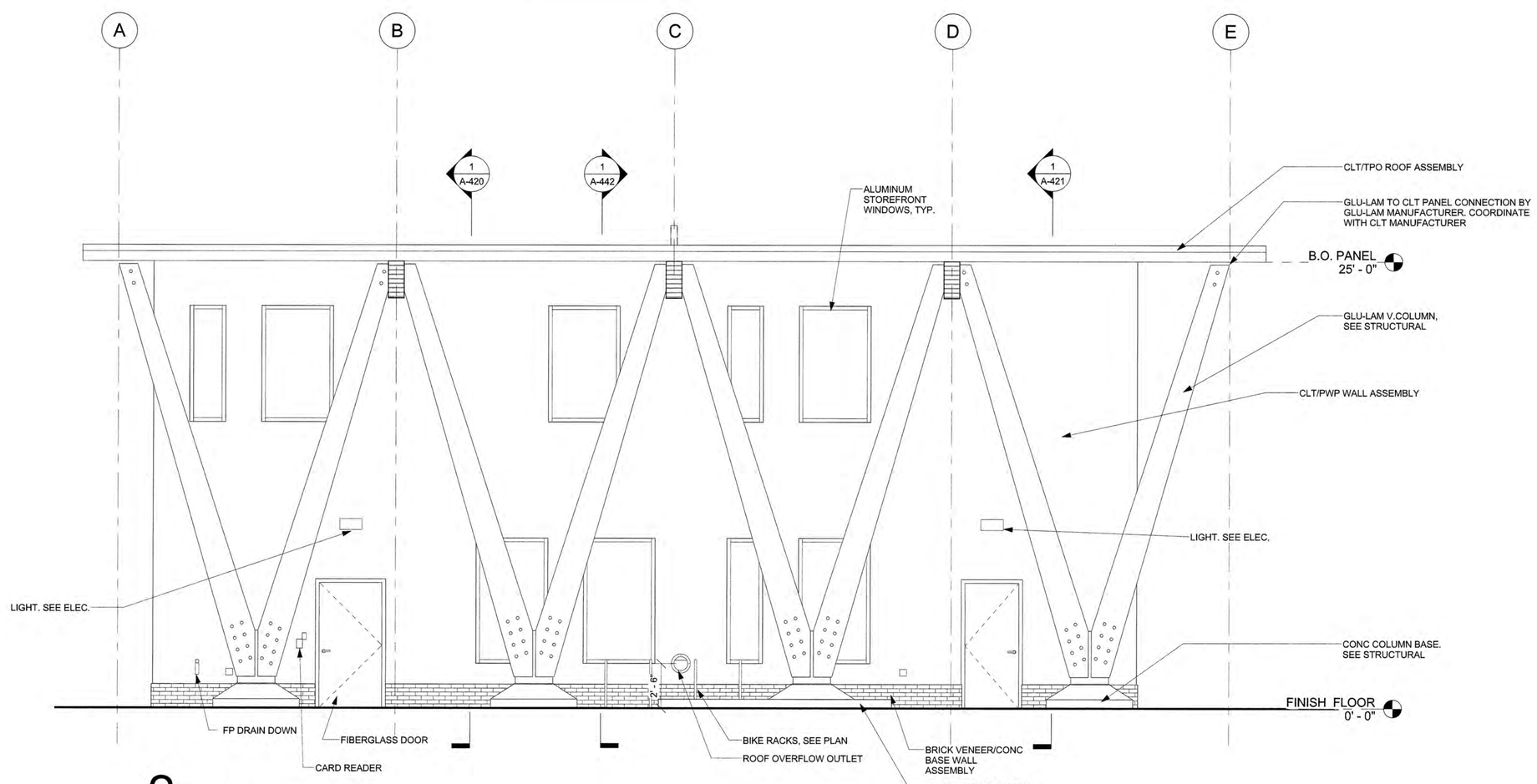

2 WEST ELEVATION
A-411 SCALE: 1/4" = 1'-0"

Greenville
NORTH CAROLINA

JACOBS
333 Fayetteville Street, Suite 1100
Raleigh, NC 27601
PH: 919-334-3100 FX: 919-334-3122 www.jacobs.com
North Carolina Engineering Firm License No. F-287
North Carolina Architectural Firm Reg. No. 50757

AYERS SAINT GROSS

Consultants:
ARK Consulting Group, PLLC

Coaly Design
Landscape Architecture + Land Planning

Seals:

JOHN A. STEVERMER
REGISTERED ARCHITECT
5858
05-09-16
NORTH CAROLINA
DURHAM, N.C.

JOHN A. STEVERMER, NC LICENSE NO. 5858

General Notes:

Project Client:
CITY OF GREENVILLE

GREENVILLE TRANSPORTATION ACTIVITY CENTER
600 S. Pitt Street, Greenville, NC

Number	Description	Date
0	IFC	05-10-2016

Key Plan: Project North

CAD File:
Project No.: L3005900
Copyright: 2015 Jacobs Engineering Group

Drawing Sheet Title:
EXTERIOR ELEVATIONS

Drawing Sheet Number:
A-411

Owner's Drawing Sheet No.:

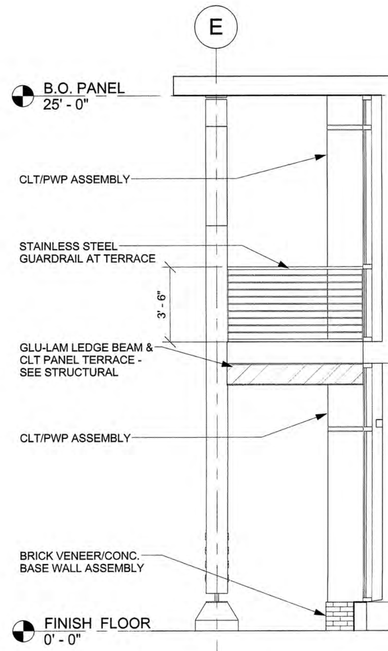

1 PARTIAL EAST ELEVATION AT STAIR 2
A-412 SCALE: 1/4" = 1'-0"

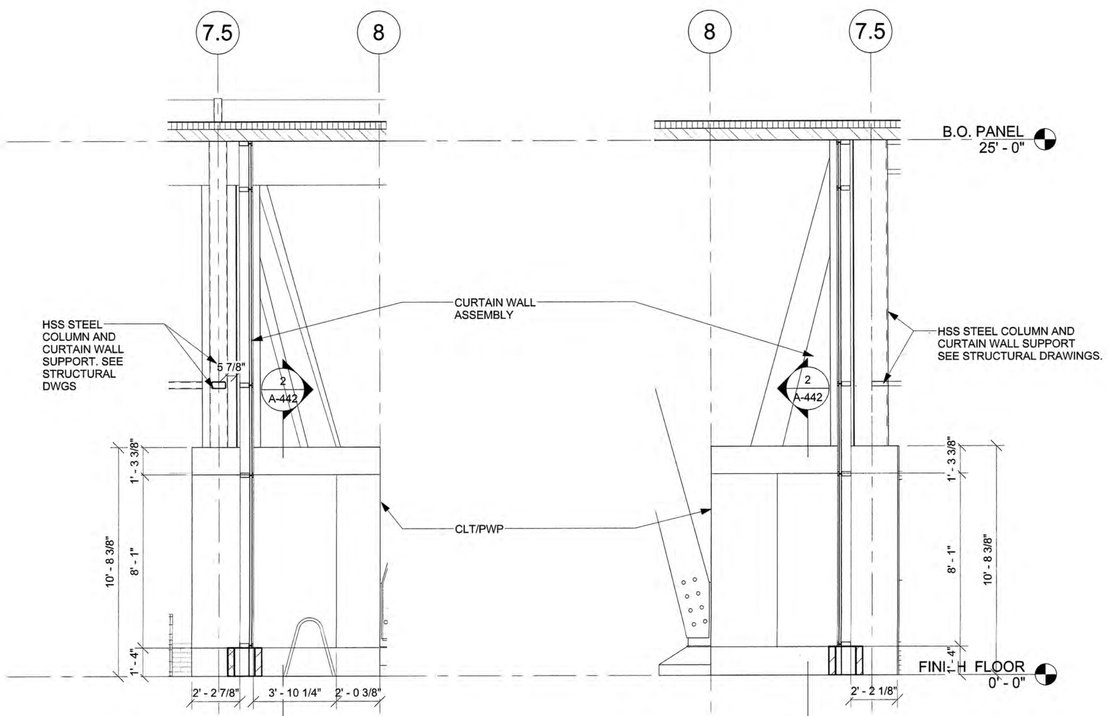

2 VESTIBULE ELEVATION_SOUTH
A-412 SCALE: 1/4" = 1'-0"

3 VESTIBULE ELEVATION_NORTH
A-412 SCALE: 1/4" = 1'-0"

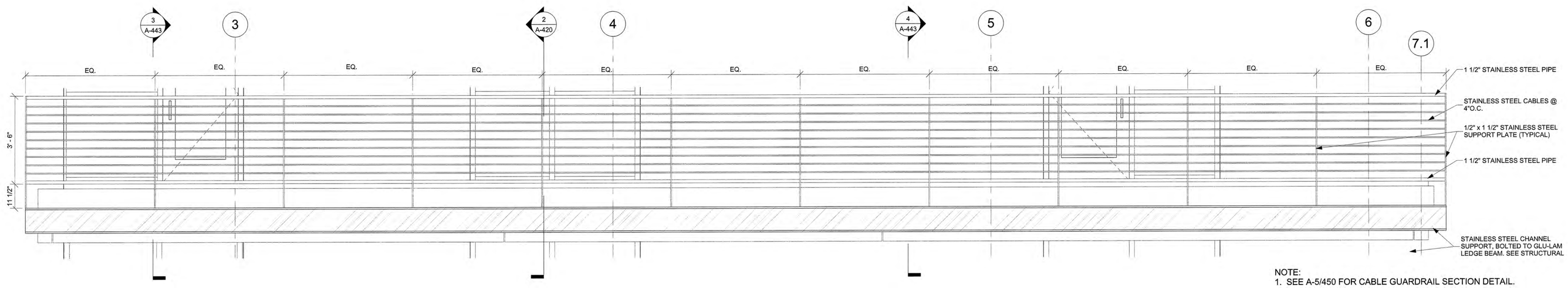

NOTE:
1. SEE A-5/450 FOR CABLE GUARDRAIL SECTION DETAIL.

4 GAURDRAIL ELEVATION
A-412 SCALE: 1/2" = 1'-0"

Greenville
NORTH CAROLINA

JACOBS
333 Fayetteville Street, Suite 1100
Raleigh, NC 27601
PH: 919-334-3100 FX: 919-334-3122 www.jacobs.com
North Carolina Engineering Firm License No. F-287
North Carolina Architectural Firm Reg. No. 50757

AYERS SAINT GROSS

Consultants:
ARK Consulting Group, PLLC

Coaly Design
Landscape Architecture + Land Planning

Seals:

JOHN A. STEVERMER, NC LICENSE NO. 5858

General Notes:

Project Client:
CITY OF GREENVILLE

GREENVILLE TRANSPORTATION ACTIVITY CENTER
600 S. Pitt Street, Greenville, NC

Number	Description	Date
0	IFC	05-10-2016

Key Plan: Project North

CAD File:
Project No.: L3005900
Copyright: 2015 Jacobs Engineering Group

Drawing Sheet Title:
PARTIAL ELEVATIONS

Drawing Sheet Number:
A-412

Owner's Drawing Sheet No.:

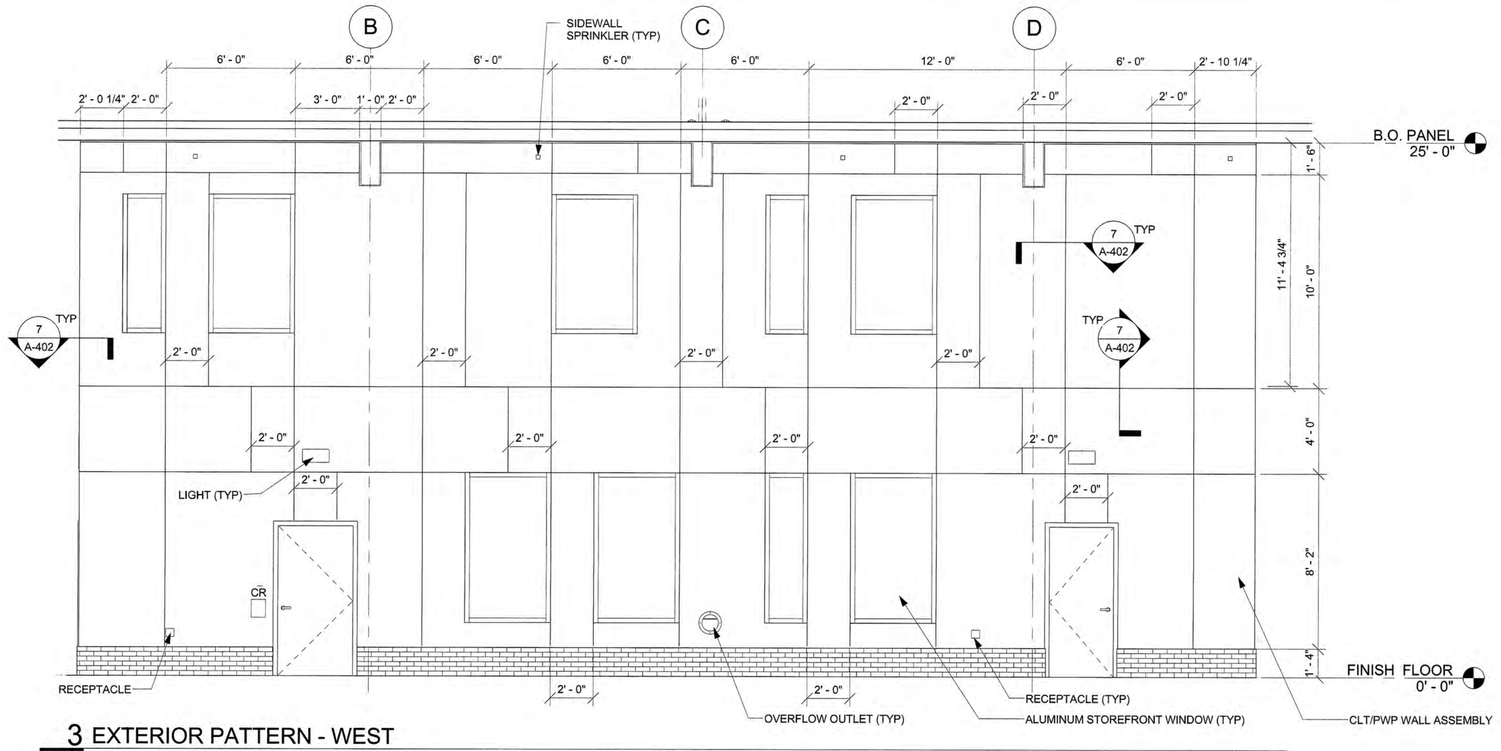

3 EXTERIOR PATTERN - WEST

A-413 SCALE: 1/4" = 1'-0"

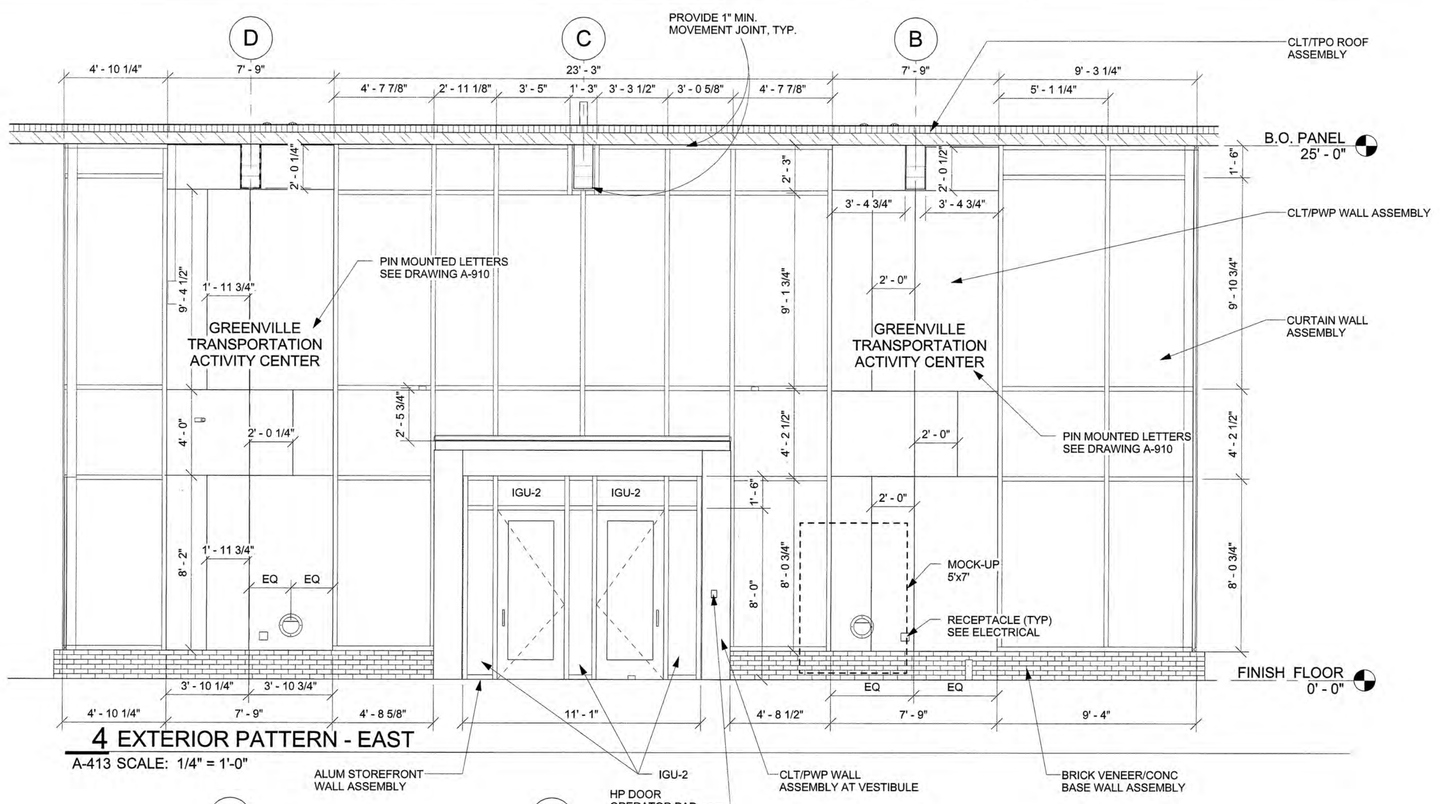

4 EXTERIOR PATTERN - EAST

A-413 SCALE: 1/4" = 1'-0"

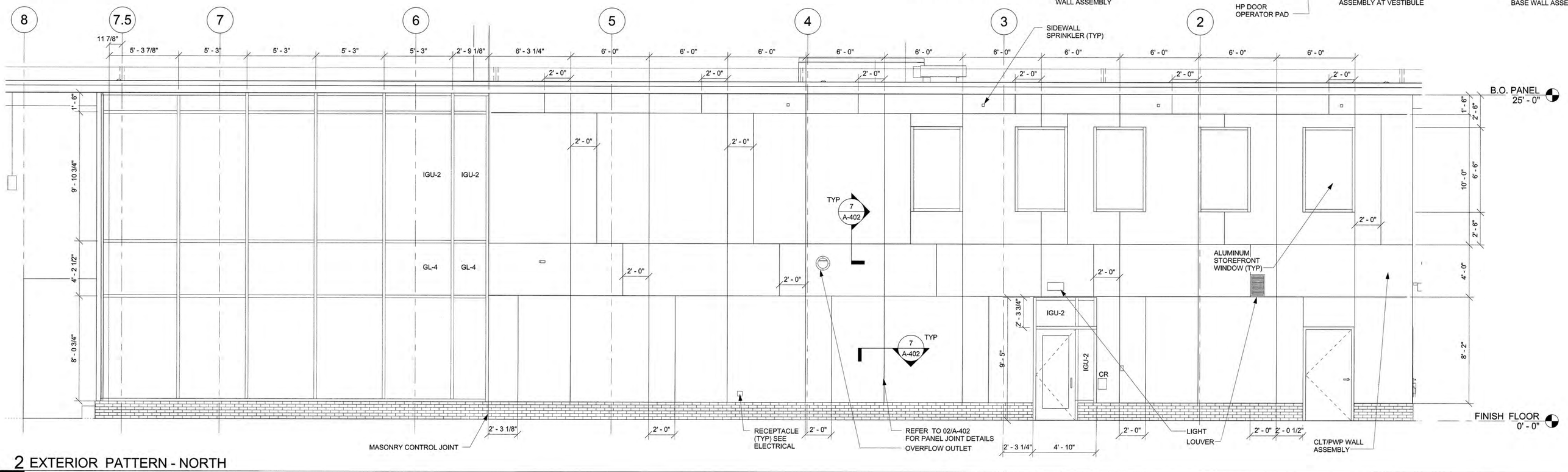

2 EXTERIOR PATTERN - NORTH

A-413 SCALE: 1/4" = 1'-0"

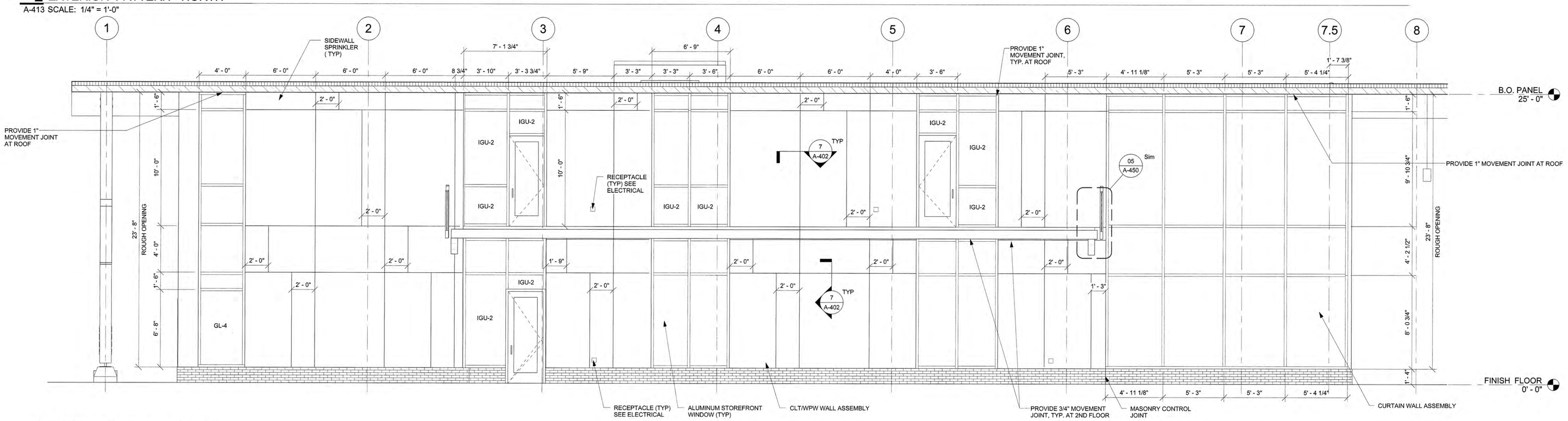

1 EXTERIOR PATTERN - SOUTH

A-413 SCALE: 1/4" = 1'-0"

Greenville NORTH CAROLINA

JACOBS

333 Fayetteville Street, Suite 1100
Raleigh, NC 27601
PH: 919-334-3100 FX: 919-334-3122 www.jacobs.com
North Carolina Engineering Firm License No. F-287
North Carolina Architectural Firm Reg. No. 50757

AYERS SAINT GROSS

Consultants:

ARK Consulting Group, PLLC

Coaly Design
Landscape Architecture + Land Planning

Seals:

JOHN A. STEVERMER REGISTERED PROFESSIONAL 5858 NORTH CAROLINA DURHAM, N.C. 05-09-16

JOHN A. STEVERMER, NC LICENSE NO. 5858

General Notes:

NOTES:
1. SEE A4/412 FOR PANEL LAYOUT AT VESTIBULE
2. TYPICAL TRESPA PANEL JOINT WIDTH IS 1/4"
3. DASHED LINES REPRESENT CENTER LINE OF PANEL JOINT
4. STOREFRONT DOORS TO RECEIVE IGU-2
5. ALL INSULATED GLAZING UNITS TO BE IGU-1 UNLESS OTHERWISE NOTED

Project Client:
CITY OF GREENVILLE

GREENVILLE TRANSPORTATION ACTIVITY CENTER
600 S. Pitt Street, Greenville, NC

Number	Description	Date
0	IFC	05-10-2016

Key Plan: Project North

CAD File:
Project No.: L3005900
Copyright: 2015 Jacobs Engineering Group

Drawing Sheet Title:
PANEL LAYOUT ELEVATIONS

Drawing Sheet Number:
A-413

Owner's Drawing Sheet No.:

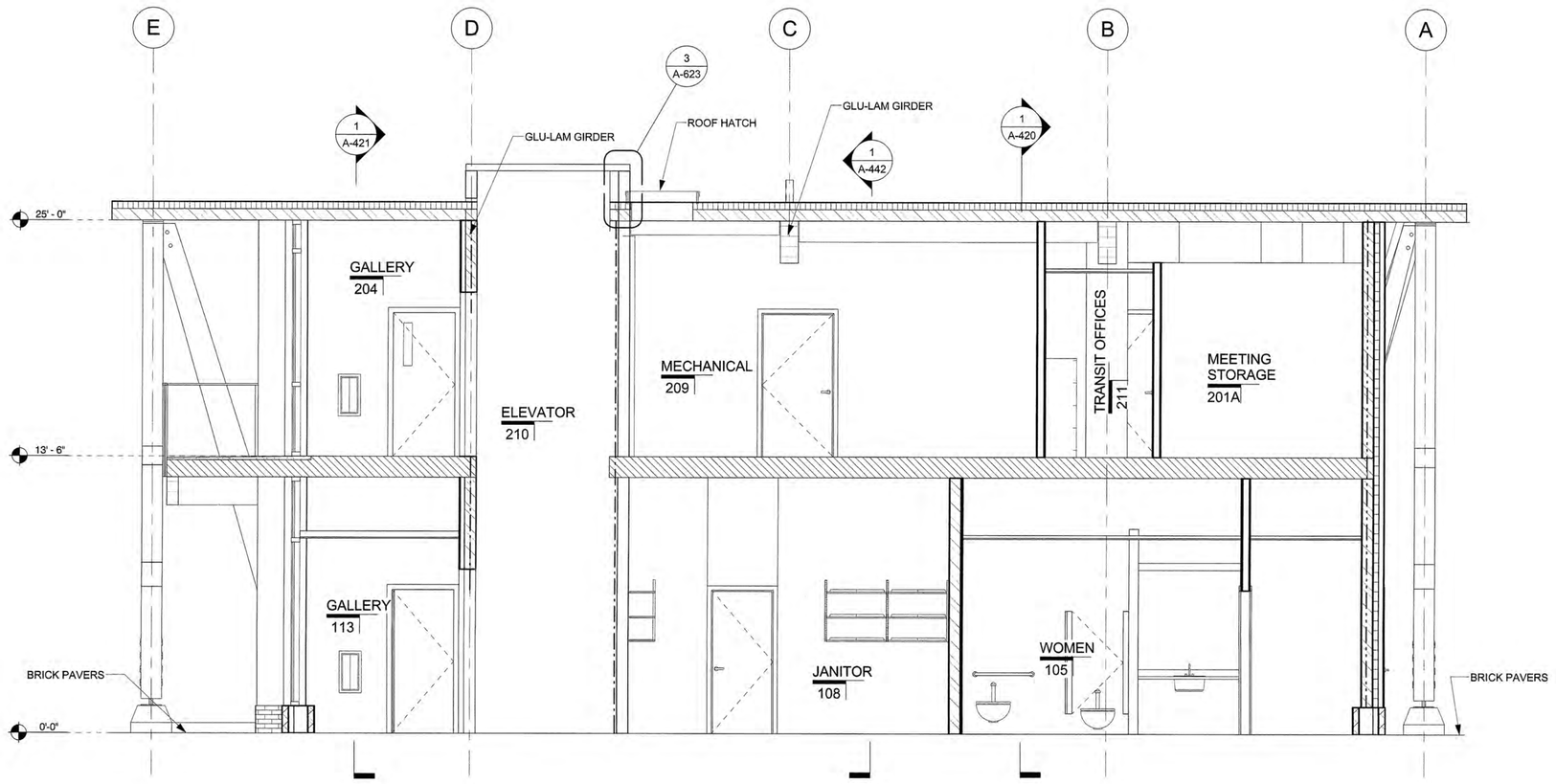

2 BUILDING SECTION 2
A-420 SCALE: 1/4" = 1'-0"

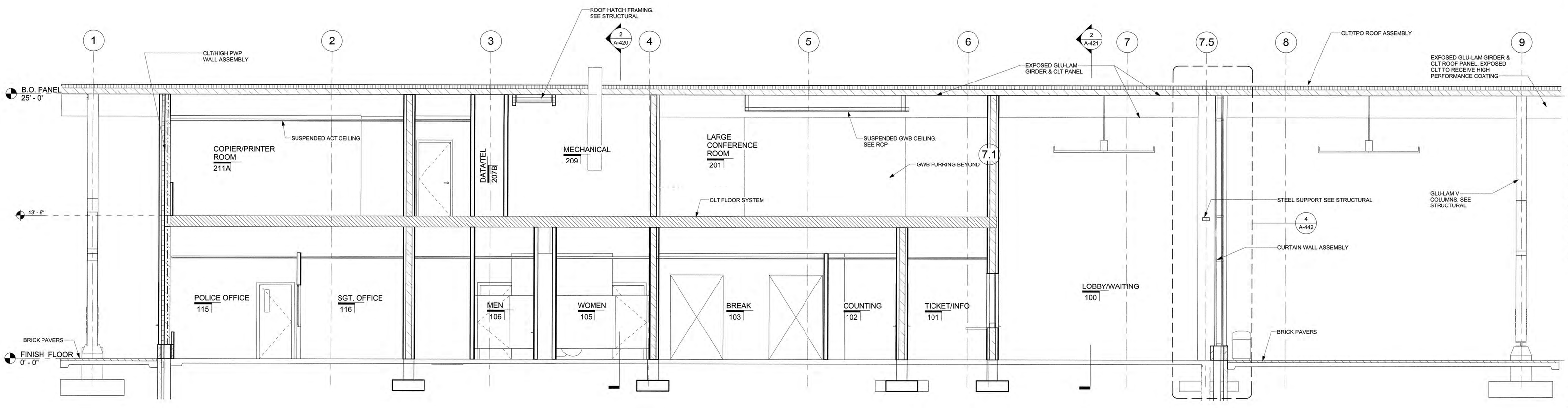

1 BUILDING SECTION 1
A-420 SCALE: 1/4" = 1'-0"

Greenville
NORTH CAROLINA

JACOBS
333 Fayetteville Street, Suite 1100
Raleigh, NC 27601
PH: 919-334-3100 FX: 919-334-3122 www.jacobs.com
North Carolina Engineering Firm License No. F-287
North Carolina Architectural Firm Reg. No. 50797

AYERS SAINT GROSS

Consultants:
ARK Consulting Group, PLLC

Coaly Design
Landscape Architecture + Land Planning

Seals:

JOHN A. STEVERMER, NC LICENSE NO. 5858

General Notes:

Project Client:
CITY OF GREENVILLE

GREENVILLE TRANSPORTATION ACTIVITY CENTER
600 S. Pitt Street, Greenville, NC

Number	Description	Date
0	IFC	05-10-2016

Key Plan: Project North

CAD File:
Project No.: L3005900
Copyright: 2015 Jacobs Engineering Group

Drawing Sheet Title:
BUILDING SECTIONS

Drawing Sheet Number:
A-420

Owner's Drawing Sheet No.:

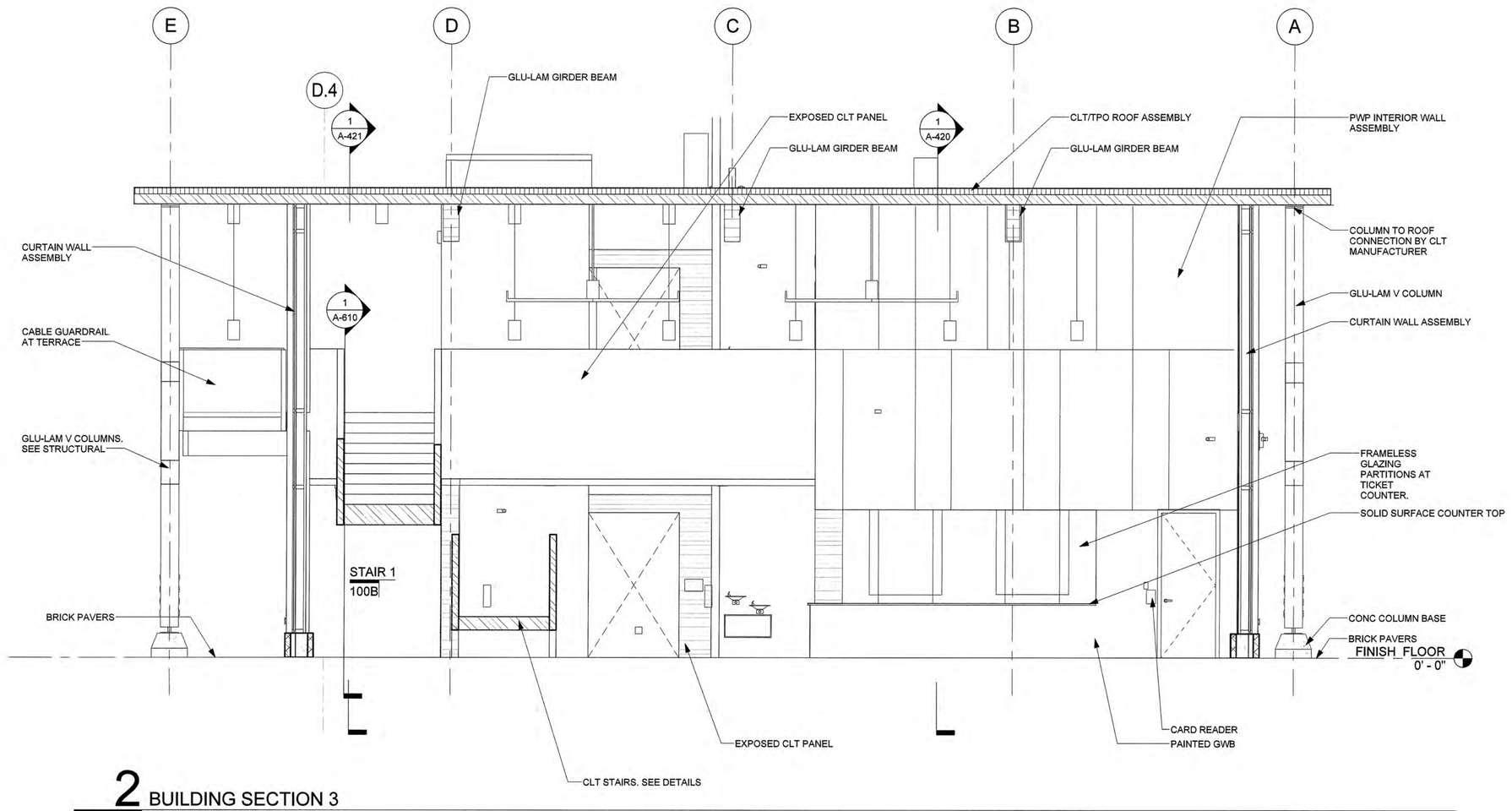

2 BUILDING SECTION 3
A-421 SCALE: 1/4" = 1'-0"

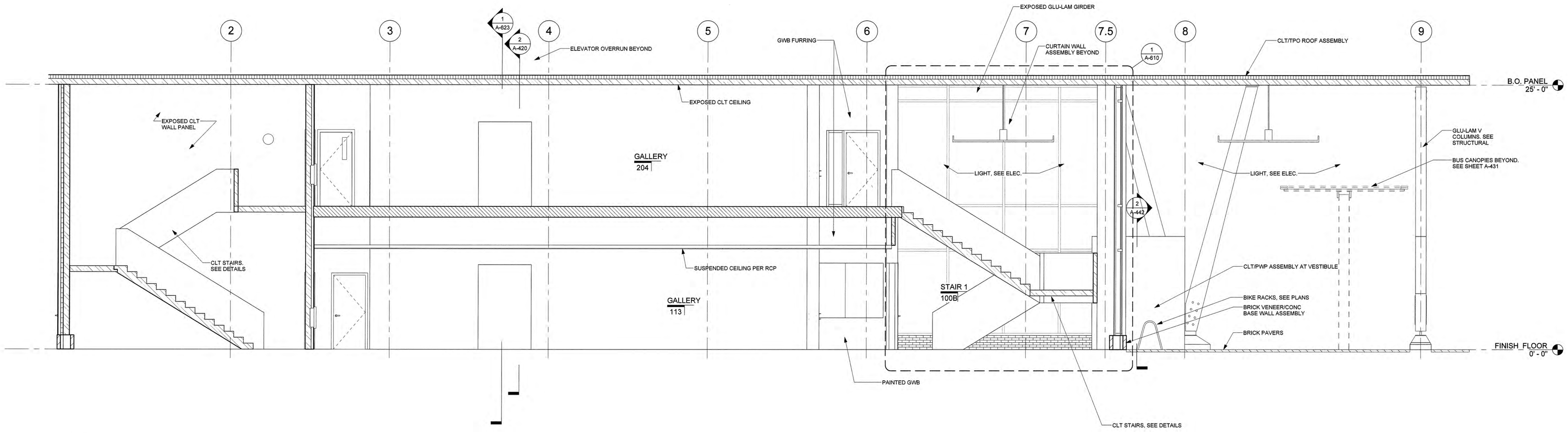

1 BUILDING SECTION 4
A-421 SCALE: 1/4" = 1'-0"

Greenville
NORTH CAROLINA

JACOBS
333 Fayetteville Street, Suite 1100
Raleigh, NC 27601
PH: 919-334-3100 FX: 919-334-3122 www.jacobs.com
North Carolina Engineering Firm License No. F-287
North Carolina Architectural Firm Reg. No. 50757

AYERS SAINT GROSS

Consultants:
ARK Consulting Group, PLLC
Coaly Design
Landscape Architecture + Land Planning

Seals:

JOHN A. STEVERMER, NC LICENSE NO. 5858

General Notes:

Project Client:
CITY OF GREENVILLE

GREENVILLE TRANSPORTATION ACTIVITY CENTER
600 S. Pitt Street, Greenville, NC

Number	Description	Date
0	IFC	05-10-2016

Key Plan: Project North

CAD File:
Project No.: L3005900
Copyright: 2015 Jacobs Engineering Group

Drawing Sheet Title:
BUILDING SECTIONS

Drawing Sheet Number:
A-421

Owner's Drawing Sheet No.:

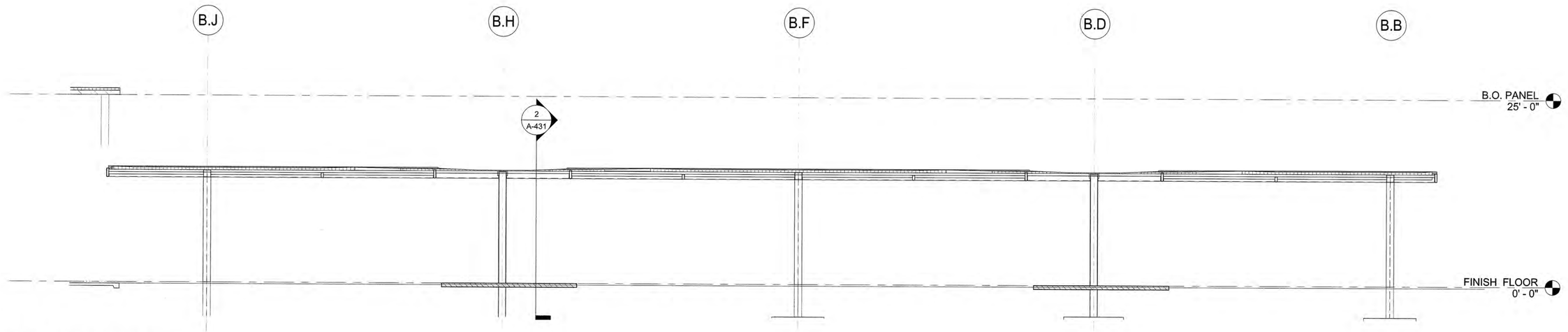

1 BUS BAY CROSS SECTION
A-431 SCALE: 1/8" = 1'-0"

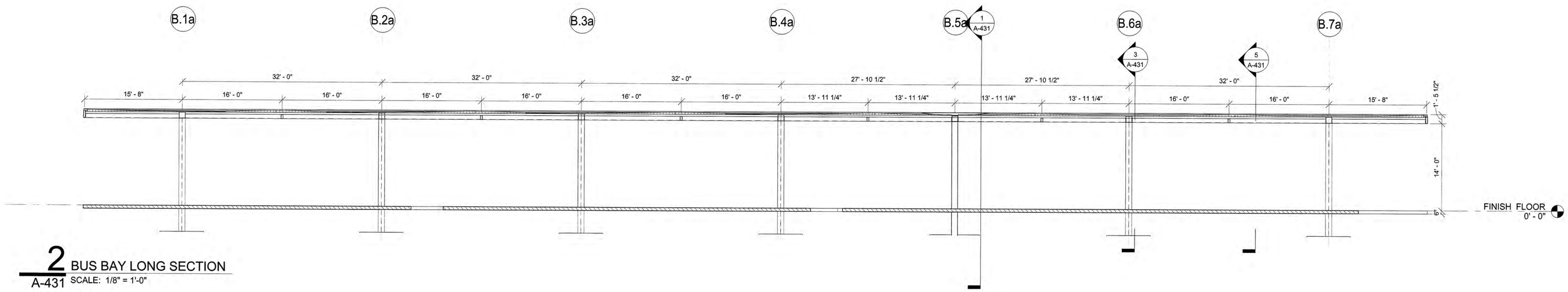

2 BUS BAY LONG SECTION
A-431 SCALE: 1/8" = 1'-0"

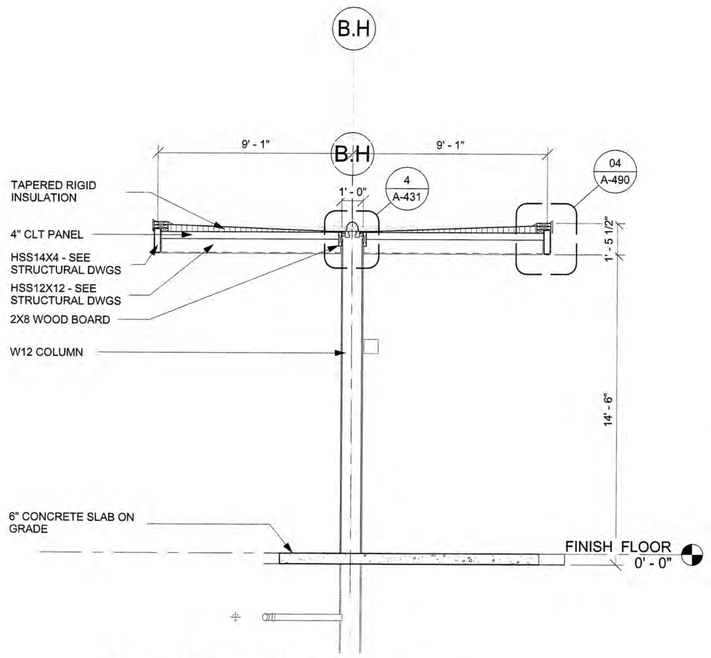

3 CANOPY SECTION -CENTER COLUMN
A-431 SCALE: 1/4" = 1'-0"

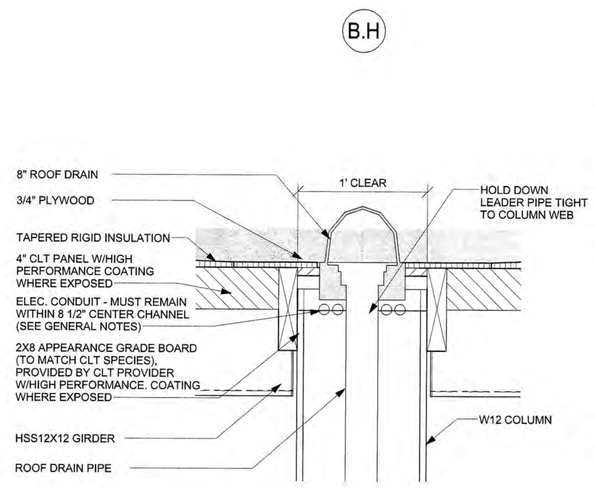

4 CANOPY SECTION DETAIL-CENTER COLUMN
A-431 SCALE: 1 1/2" = 1'-0"

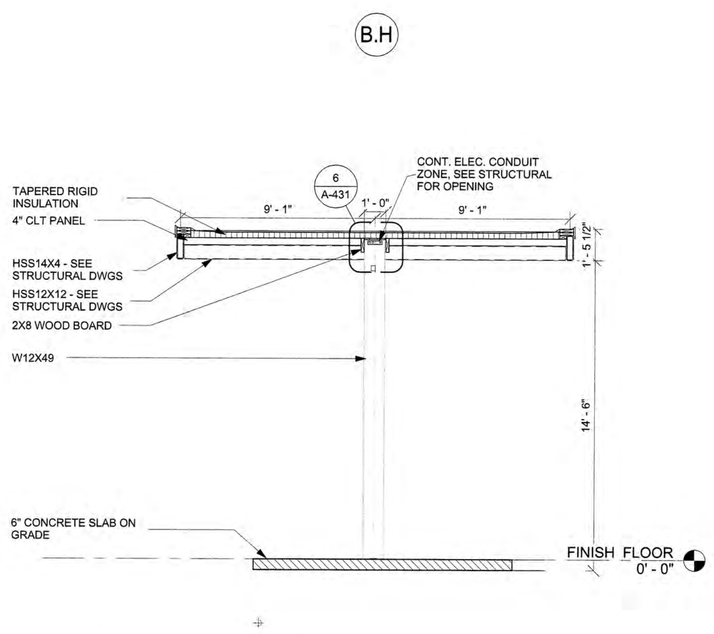

5 CANOPY SECTION - MID SPAN BEAM
A-431 SCALE: 1/4" = 1'-0"

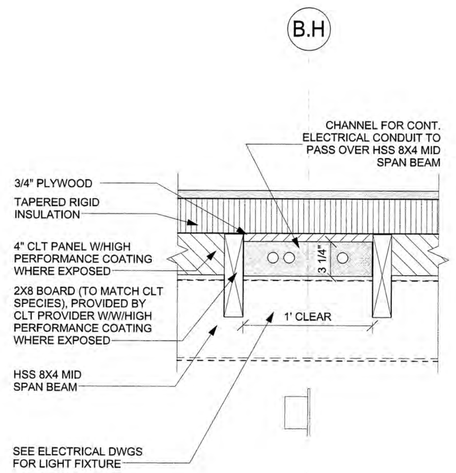

6 CANOPY SECTION DETAIL-MID SPAN BEAM
A-431 SCALE: 1 1/2" = 1'-0"

Greenville
NORTH CAROLINA

JACOBS
333 Fayetteville Street, Suite 1100
Raleigh, NC 27601
PH: 919-334-3100 FX: 919-334-3122 www.jacobs.com
North Carolina Engineering Firm License No. F-287
North Carolina Architectural Firm Reg. No. 50757

AYERS SAINT GROSS

Consultants:
ARK Consulting Group, PLLC

Coaly Design
Landscape Architecture + Land Planning

Seals:

JOHN A. STEVERMER
REGISTERED ARCHITECT
5858
NORTH CAROLINA
DURHAM, N.C.
05-09-16

JOHN A. STEVERMER, NC LICENSE NO. 5858

General Notes:

1. ALL EXTERIOR STRUCTURAL STEEL TO RECEIVE HIGH PERFORMANCE COATING - SEE DIVISION 9
2. ALL EXPOSED INTERIOR AND EXTERIOR CLT AND GLULAM TO RECEIVE HIGH PERFORMANCE COATING. SEE DIVISION 9

Project Client:
CITY OF GREENVILLE

NOTE: FIRESTONE (DETAIL NO. UT-RE-1)

GREENVILLE TRANSPORTATION ACTIVITY CENTER
600 S. Pitt Street, Greenville, NC

Number	Description	Date
0	IFC	05-10-2016

Key Plan: Project North

CAD File:
Project No.: L3005900
Copyright: 2015 Jacobs Engineering Group

Drawing Sheet Title:
BUS BAY SECTIONS

Drawing Sheet Number:
A-431

Owner's Drawing Sheet No.:

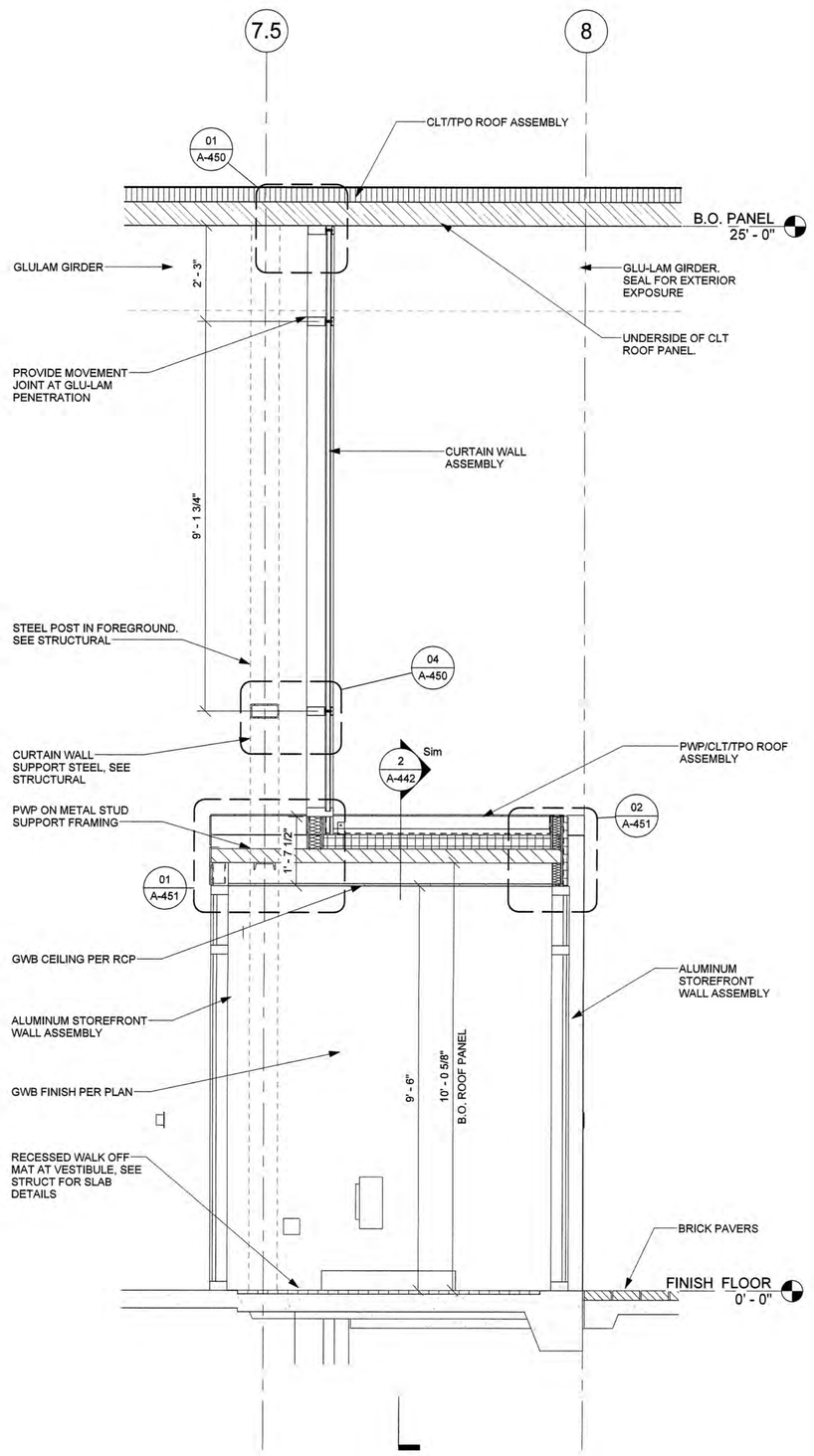

1 WALL SECTION THROUGH VESTIBULE
A-441 SCALE: 1/2" = 1'-0"

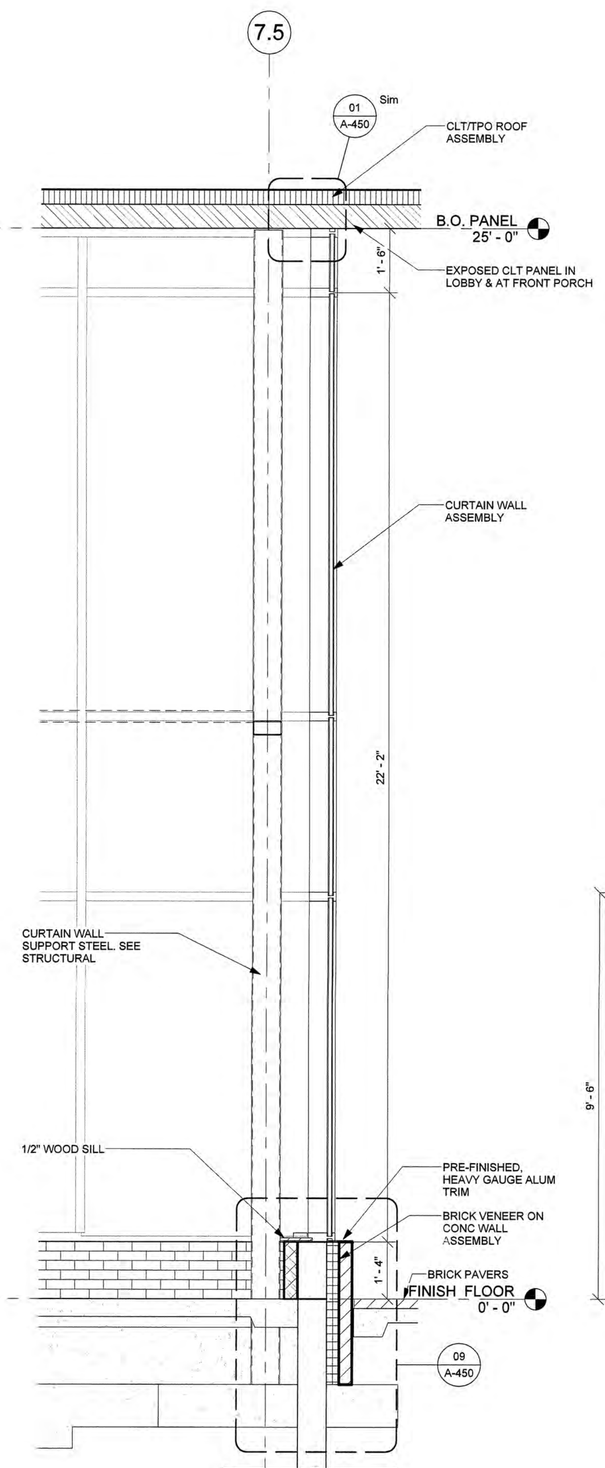

2 WALL SECTION AT LOBBY
A-441 SCALE: 1/2" = 1'-0"

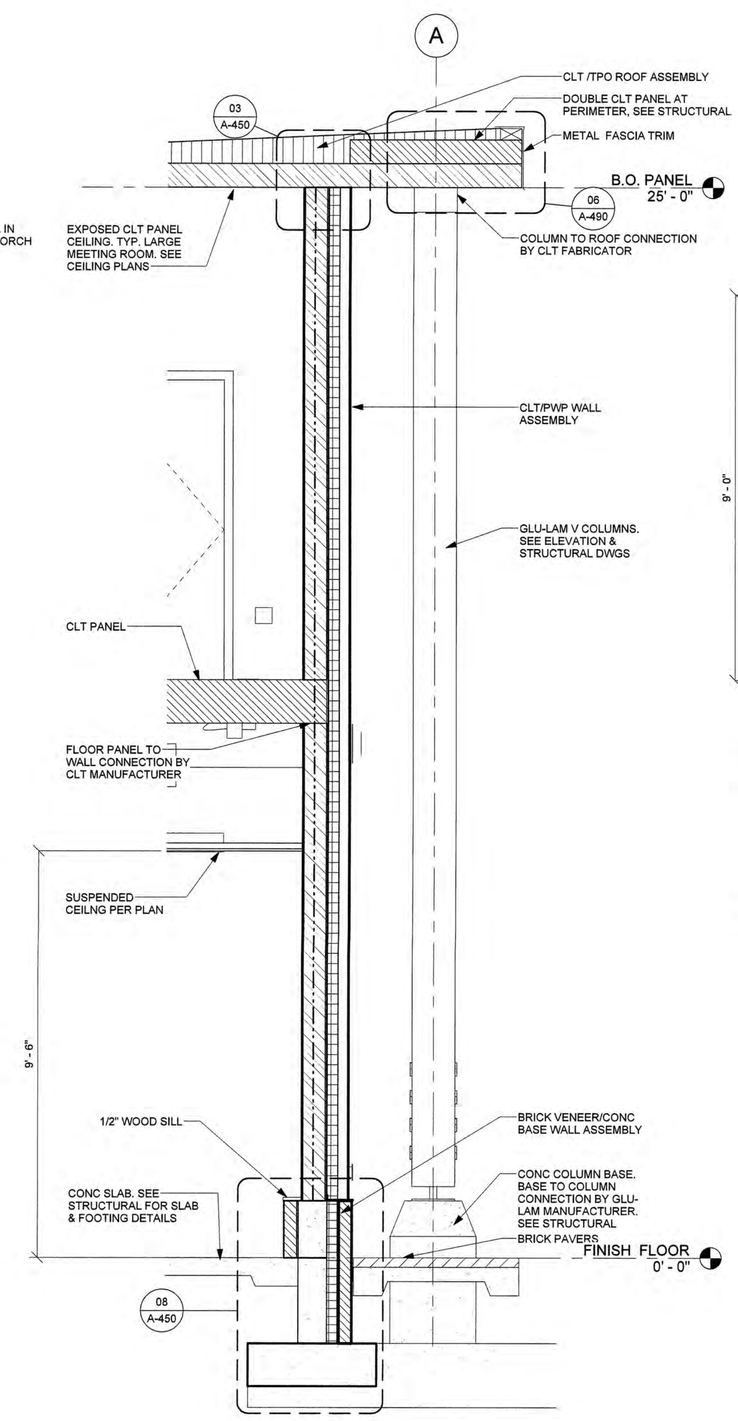

3 WALL SECTION THROUGH NORTH WALL
A-441 SCALE: 1/2" = 1'-0"

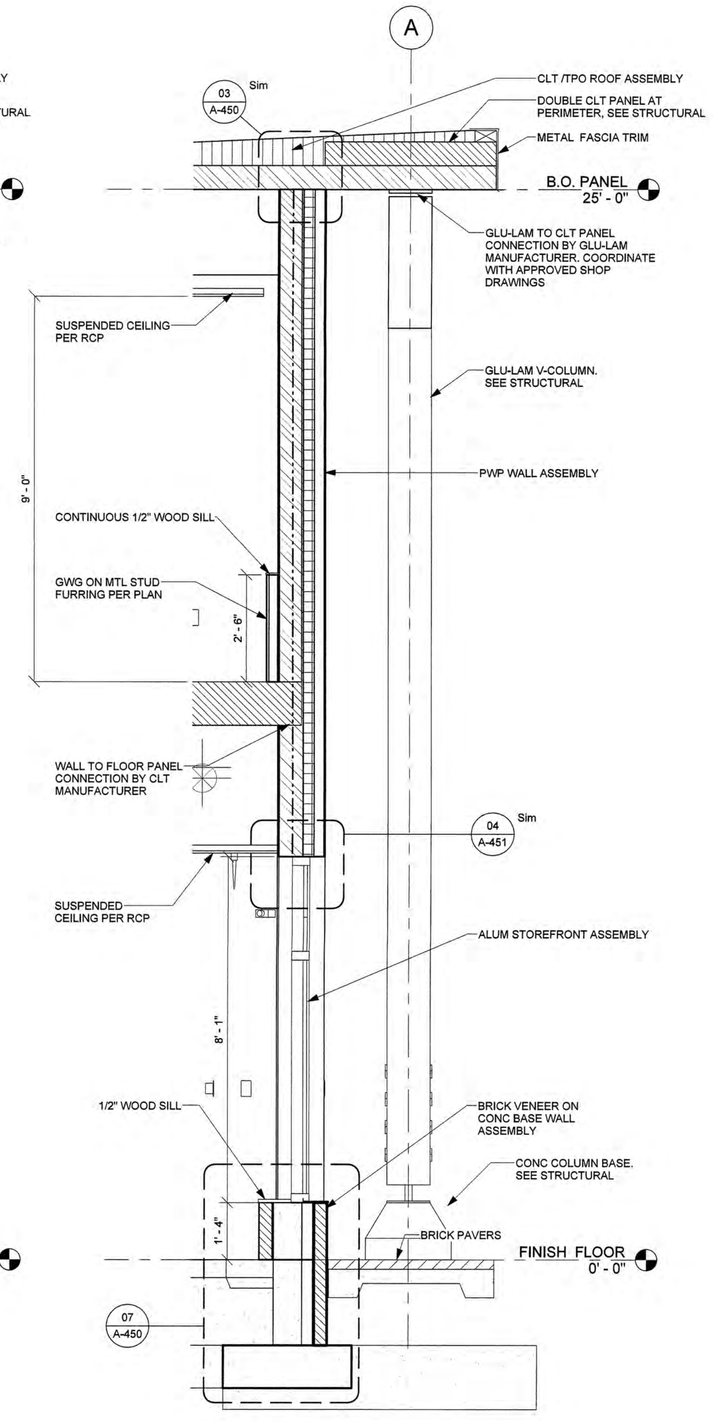

4 WALL SECTION AT TRANSIT OFFICE
A-441 SCALE: 1/2" = 1'-0"

Greenville
NORTH CAROLINA

JACOBS

333 Fayetteville Street, Suite 1100
Raleigh, NC 27601
PH: 919-334-3100 FX: 919-334-3122 www.jacobs.com
North Carolina Engineering Firm License No. F-287
North Carolina Architectural Firm Reg. No. 50757

AYERS SAINT GROSS

Consultants:

ARK Consulting Group, PLLC

Coaly Design
Landscape Architecture + Land Planning

Seals:

JOHN A. STEVERMER REGISTERED ARCHITECT 5858 NORTH CAROLINA DURHAM, N.C. 05-09-16

JOHN A. STEVERMER, NC LICENSE NO. 5858

General Notes:

1. EXPOSED CLT PANELS AND EXPOSED GLU-LAM TO RECEIVE HIGH PERFORMANCE COATING SEE DIVISION 9.

Project Client:
CITY OF GREENVILLE

GREENVILLE TRANSPORTATION ACTIVITY CENTER
600 S. Pitt Street, Greenville, NC

Number	Description	Date
0	IFC	05-10-2016

Key Plan: Project North

CAD File:
Project No.: L3005900
Copyright: 2015 Jacobs Engineering Group

Drawing Sheet Title:
WALL SECTIONS

Drawing Sheet Number:
A-441

Owner's Drawing Sheet No.:

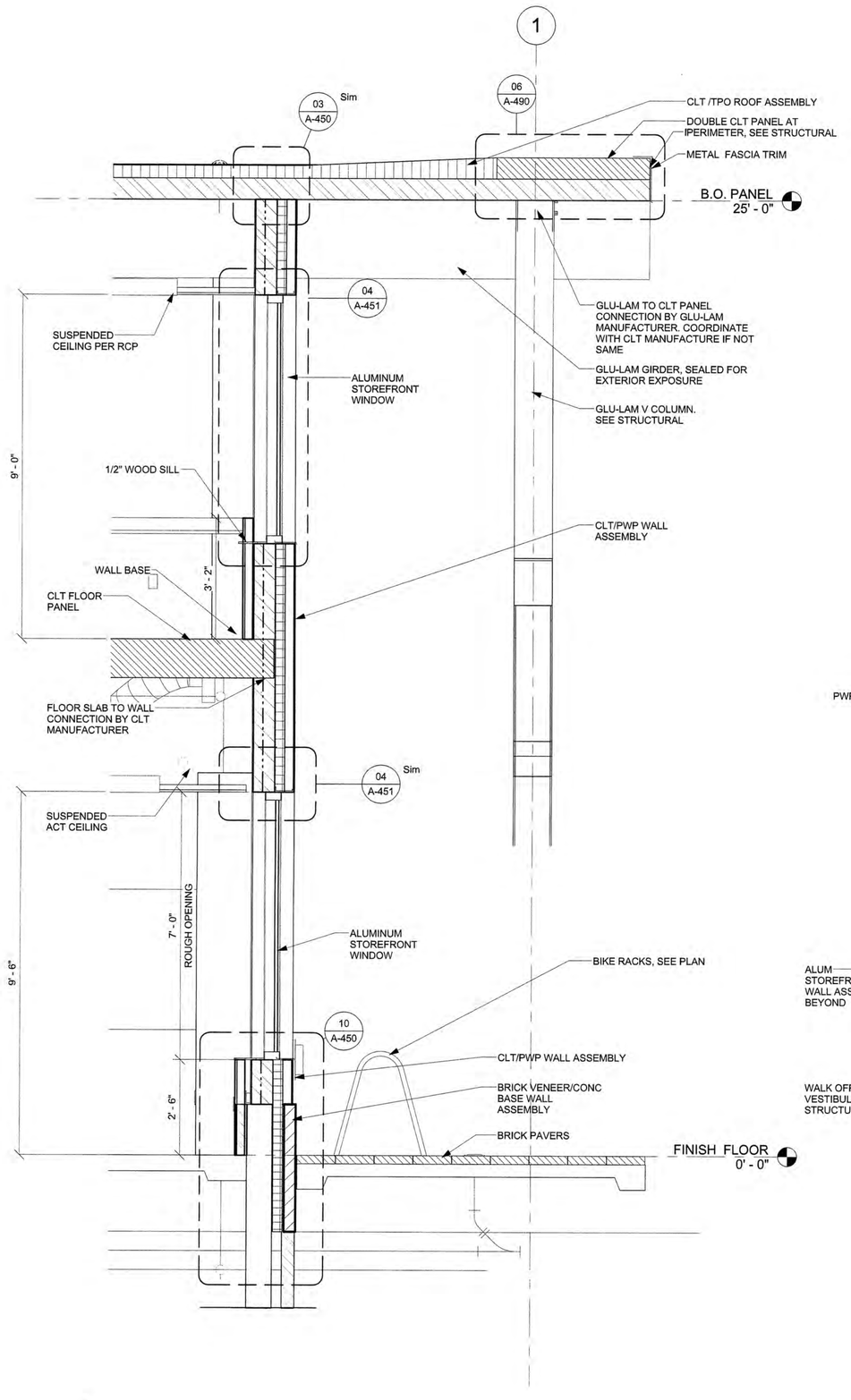

1 WALL SECTION AT POLICE OFFICE
A-442 SCALE: 1/2" = 1'-0"

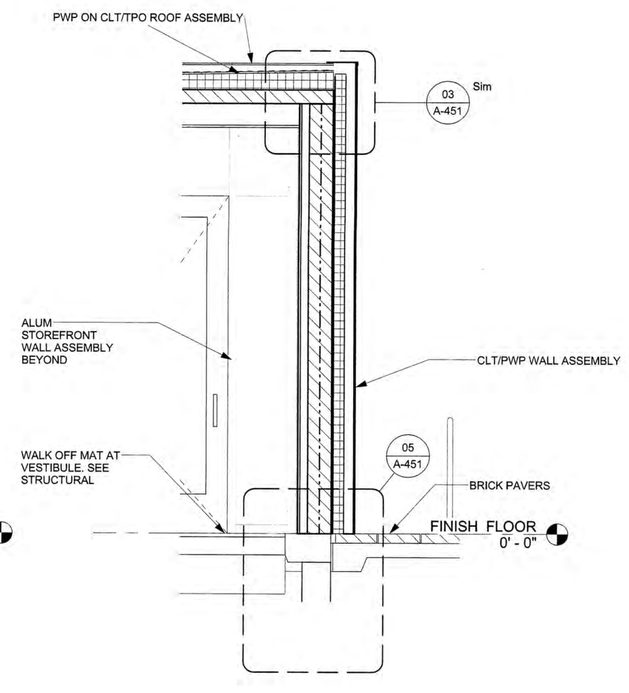

2 WALL SECTION AT VESTIBULE SIDE WALL
A-442 SCALE: 1/2" = 1'-0"

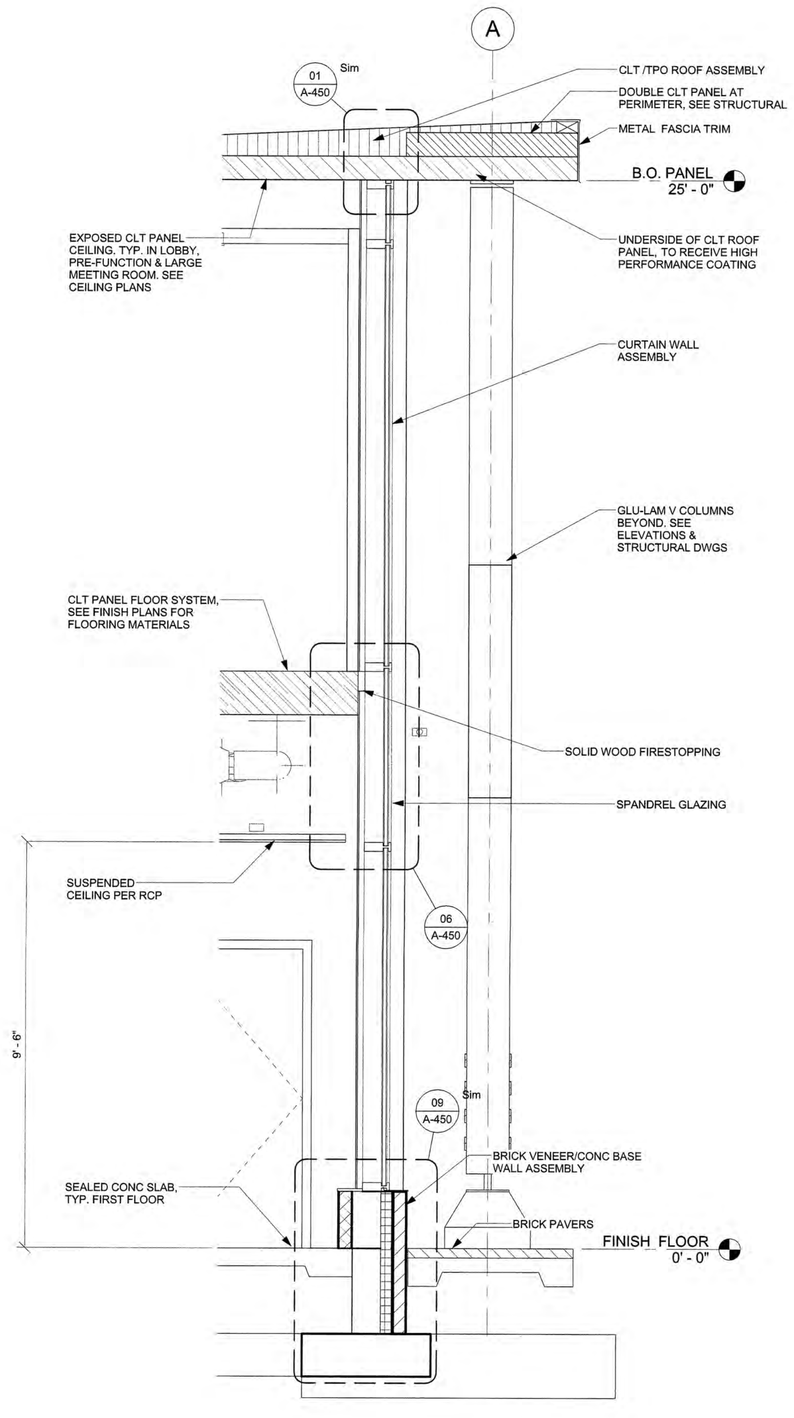

3 WALL SECTION AT LARGE MEETING RM
A-442 SCALE: 1/2" = 1'-0"

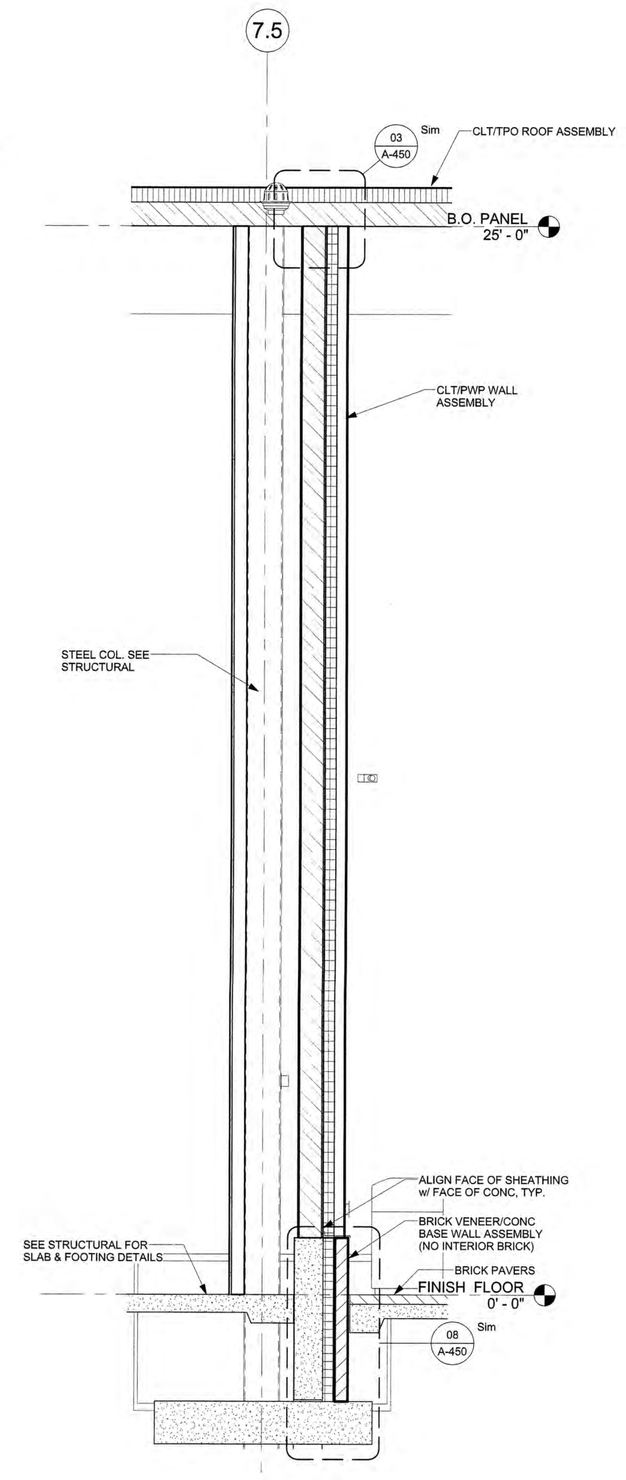

4 WALL SECTION THROUGH LOBBY FRONT WALL
A-442 SCALE: 1/2" = 1'-0"

Greenville
NORTH CAROLINA

JACOBS
333 Fayetteville Street, Suite 1100
Raleigh, NC 27601
PH: 919-334-3100 FX: 919-334-3122 www.jacobs.com
North Carolina Engineering Firm License No. F-287
North Carolina Architectural Firm Reg. No. 50757

AYERS SAINT GROSS

Consultants:
ARK Consulting Group, PLLC

Coaly Design
Landscape Architecture + Land Planning

Seals:

JOHN A. STEVERMER, NC LICENSE NO. 5858

General Notes:

Project Client:
CITY OF GREENVILLE

GREENVILLE TRANSPORTATION ACTIVITY CENTER
600 S. Pitt Street, Greenville, NC

Number	Description	Date
0	IFC	05-10-2016

Key Plan: Project North

CAD File:
Project No.: L3005900
Copyright: 2015 Jacobs Engineering Group

Drawing Sheet Title:
WALL SECTIONS

Drawing Sheet Number:
A-442

Owner's Drawing Sheet No.:

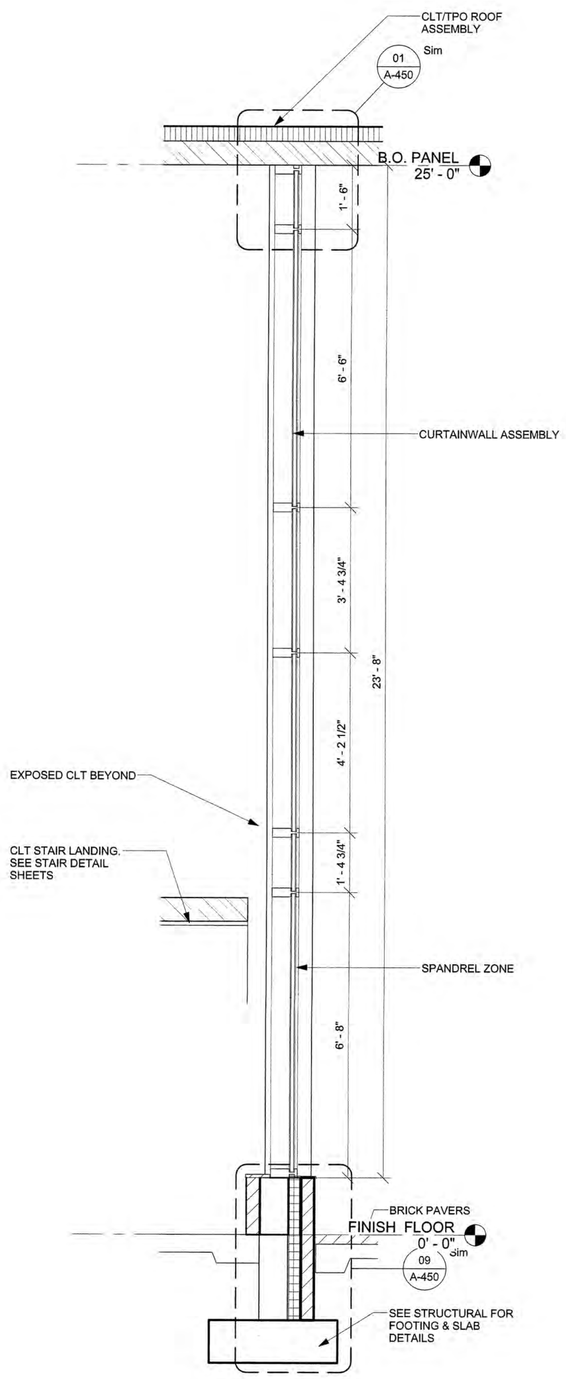

1 SECTION THROUGH STAIR 2 CURTAINWALL
A-443 SCALE: 1/2" = 1'-0"

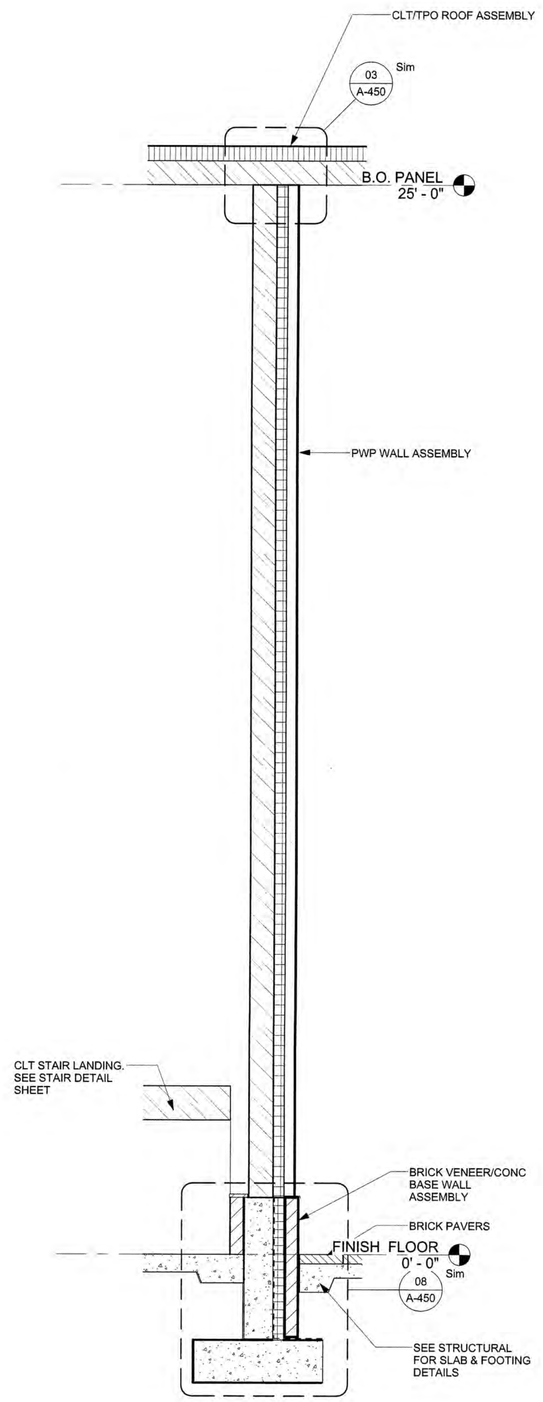

2 SECTION THROUGH STAIR 2 EXTERIOR WALL
A-443 SCALE: 1/2" = 1'-0"

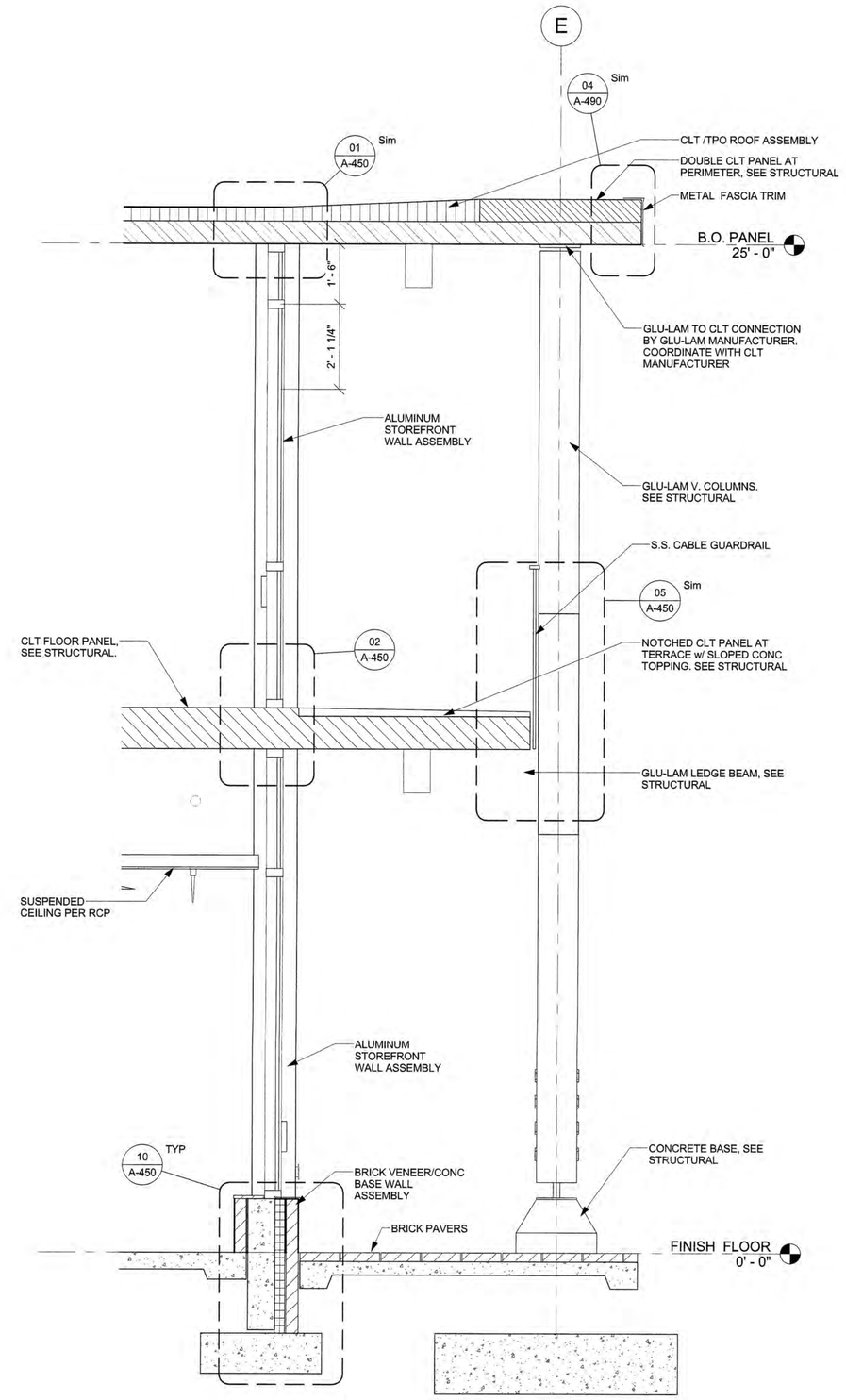

3 SECTION THROUGH TERRACE
A-443 SCALE: 1/2" = 1'-0"

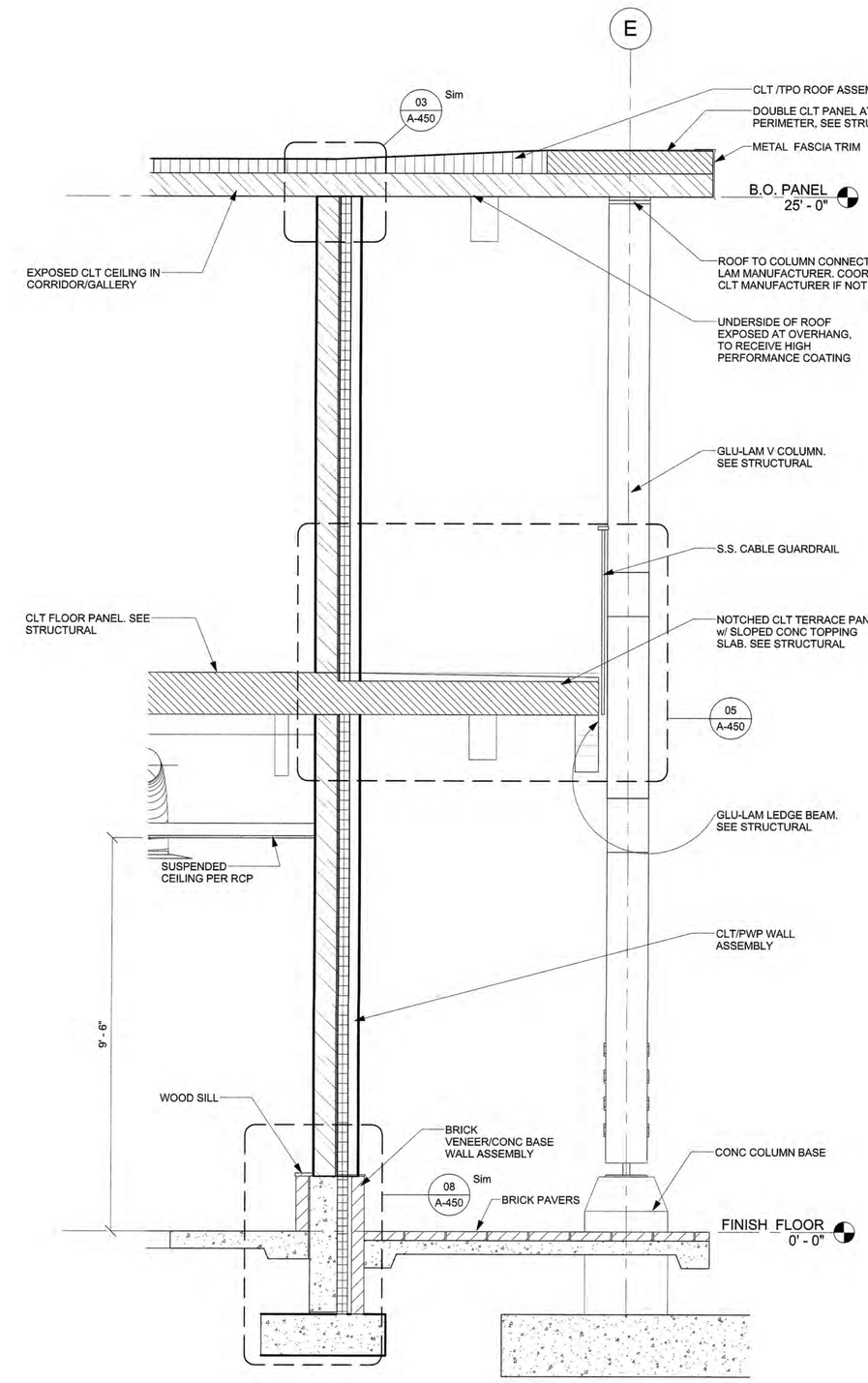

4 WALL SECTION THROUGH TERRACE
A-443 SCALE: 1/2" = 1'-0"

Greenville
NORTH CAROLINA

JACOBS
333 Fayetteville Street, Suite 1100
Raleigh, NC 27601
PH: 919-334-3100 FX: 919-334-3122 www.jacobs.com
North Carolina Engineering Firm License No. F-287
North Carolina Architectural Firm Reg. No. 50757

AYERS SAINT GROSS

Consultants:
ARK Consulting Group, PLLC

Coaly Design
Landscape Architecture + Land Planning

Seals:

JOHN A. STEVERMER, NC LICENSE NO. 5858

General Notes:

Project Client:
CITY OF GREENVILLE

GREENVILLE TRANSPORTATION ACTIVITY CENTER
600 S. Pitt Street, Greenville, NC

Number	Description	Date
0	IFC	05-10-2018

Key Plan: Project North

CAD File:
Project No.: L3005900
Copyright: 2015 Jacobs Engineering Group

Drawing Sheet Title:
WALL SECTIONS

Drawing Sheet Number:
A-443

Owner's Drawing Sheet No.:

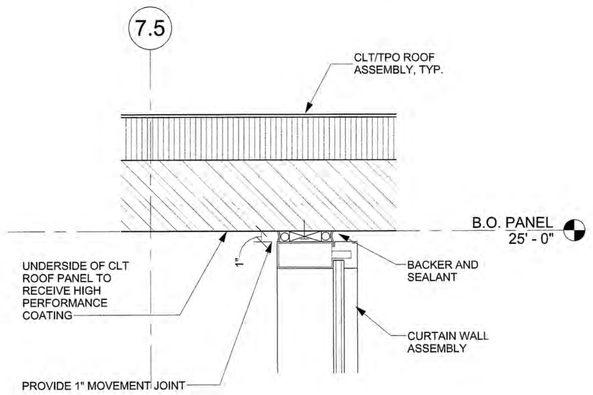

01 SECTION DETAIL
A-450 SCALE: 1 1/2" = 1'-0"

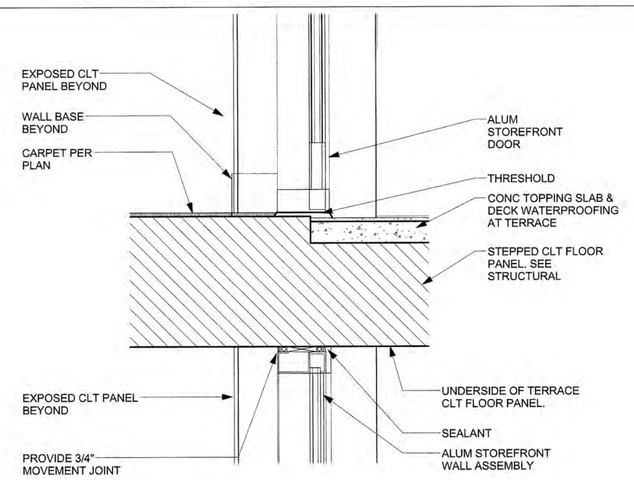

02 SECTION DETAIL
A-450 SCALE: 1 1/2" = 1'-0"

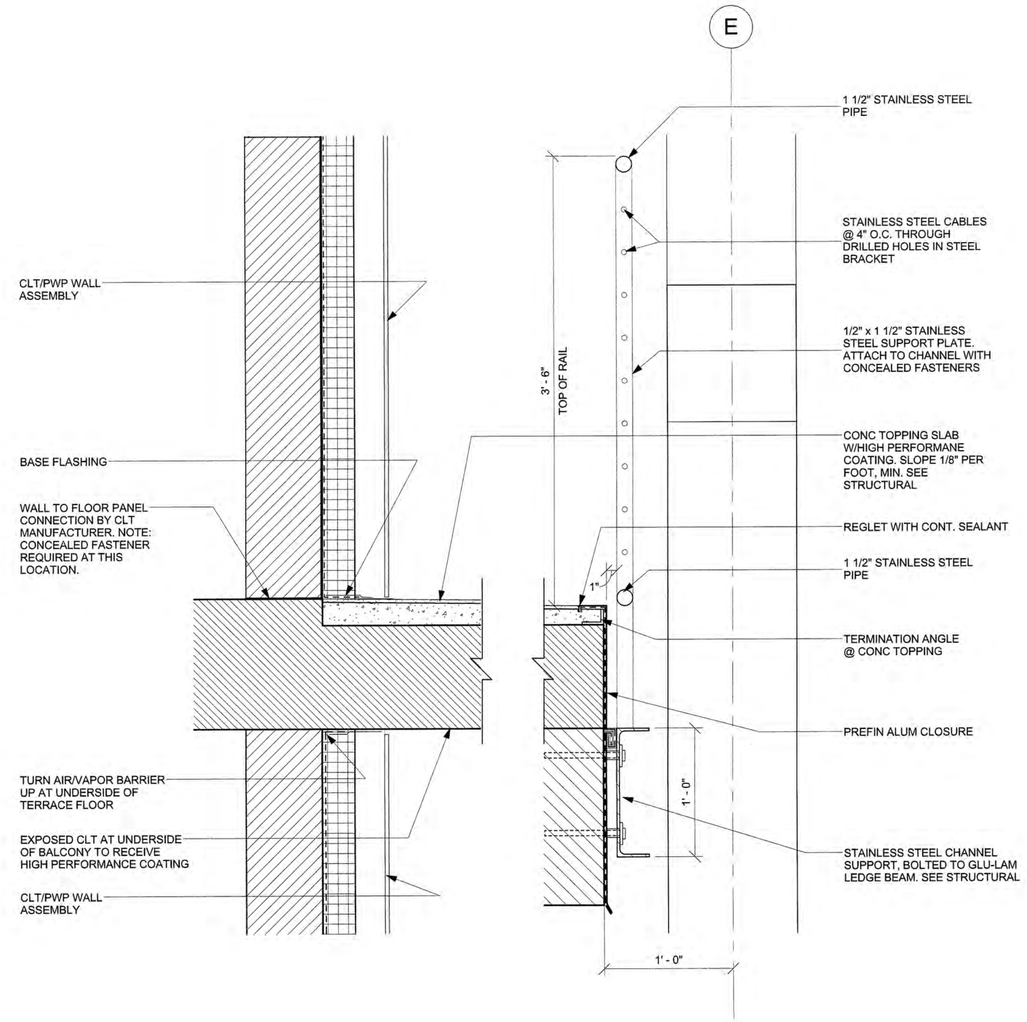

05 SECTION DETAIL
A-450 SCALE: 1 1/2" = 1'-0"

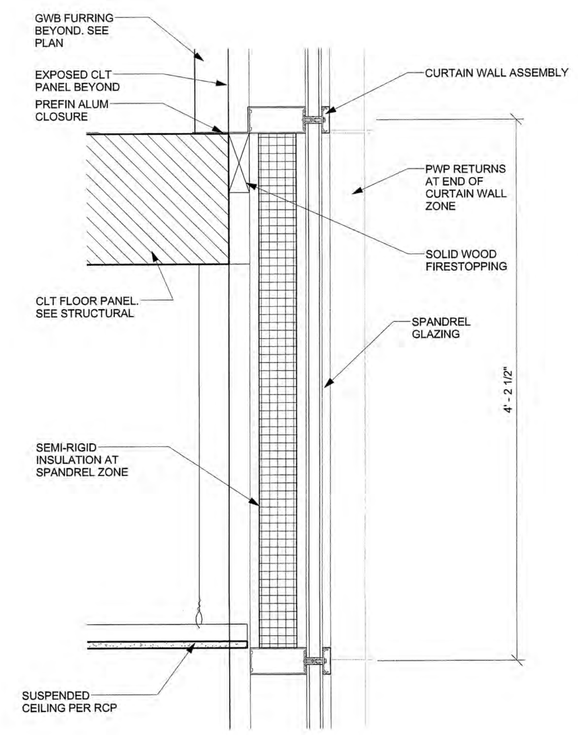

06 SECTION DETAIL
A-450 SCALE: 1 1/2" = 1'-0"

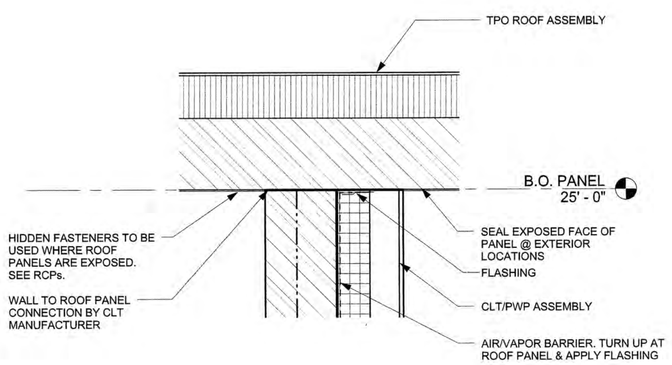

03 SECTION DETAIL
A-450 SCALE: 1 1/2" = 1'-0"

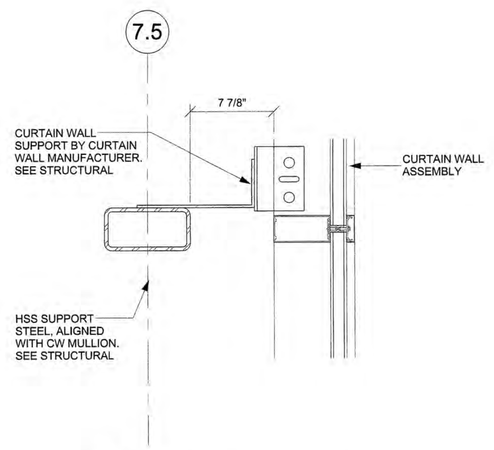

04 SECTION DETAIL
A-450 SCALE: 1 1/2" = 1'-0"

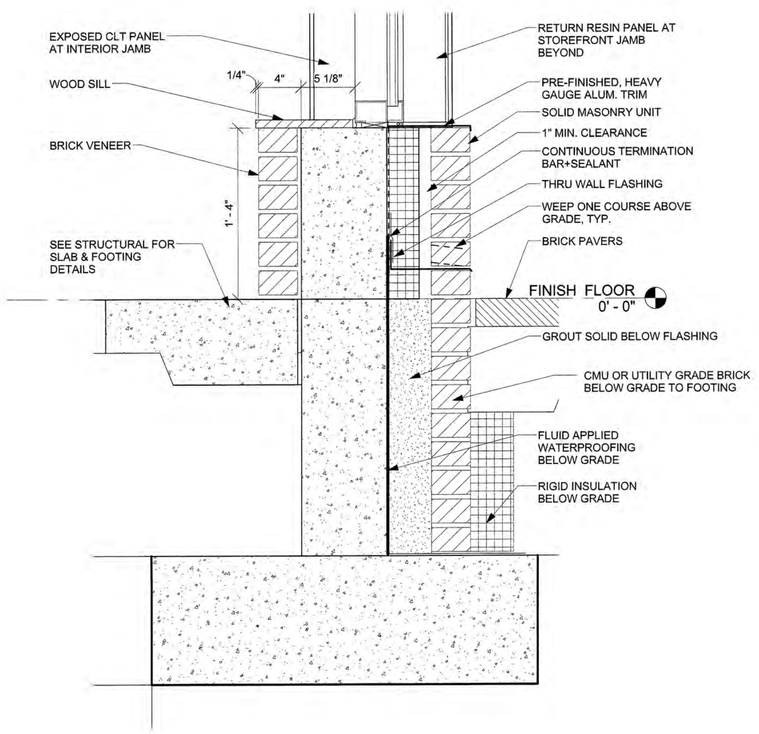

07 SECTION DETAIL
A-450 SCALE: 1 1/2" = 1'-0"

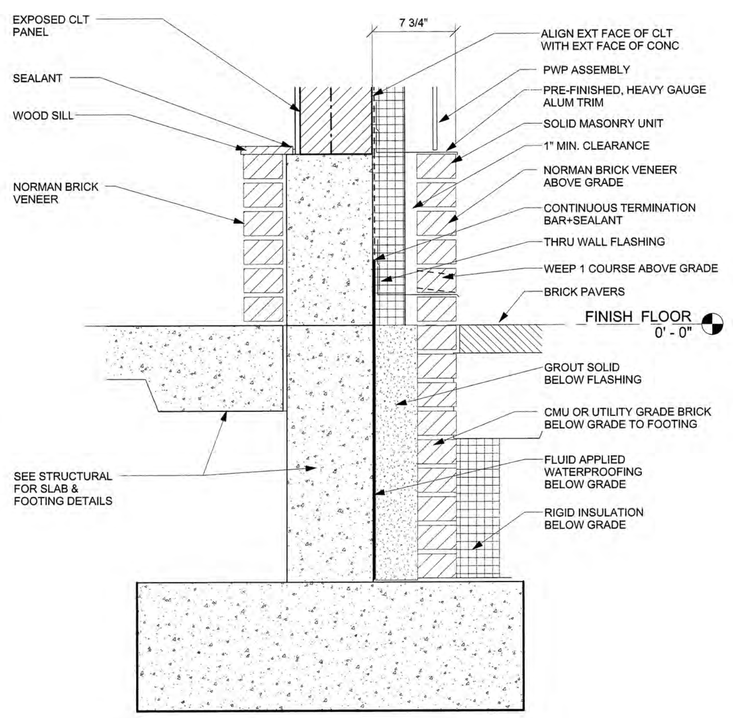

08 SECTION DETAIL
A-450 SCALE: 1 1/2" = 1'-0"

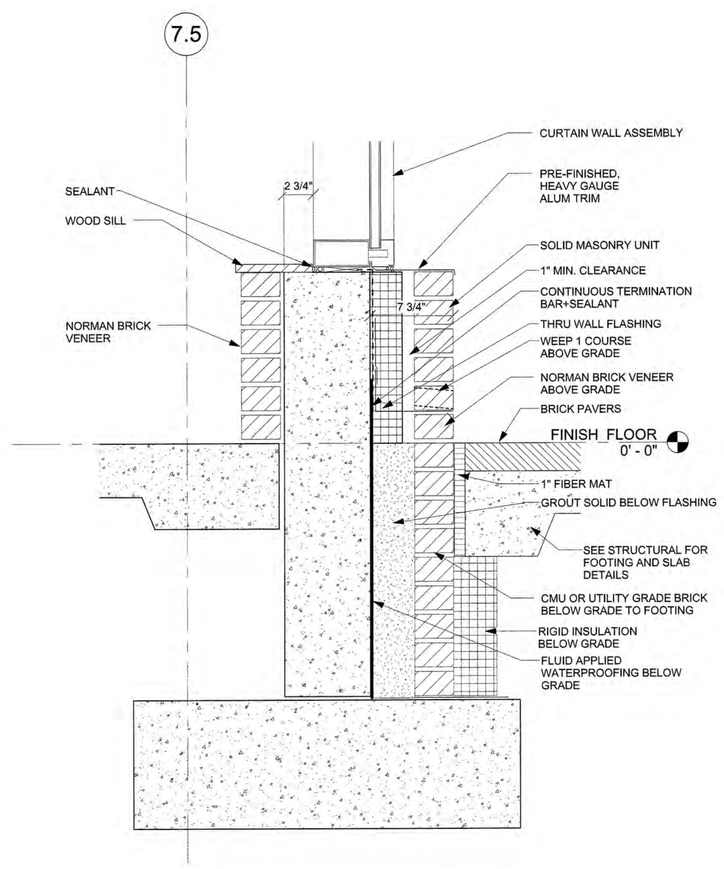

09 SECTION DETAIL
A-450 SCALE: 1 1/2" = 1'-0"

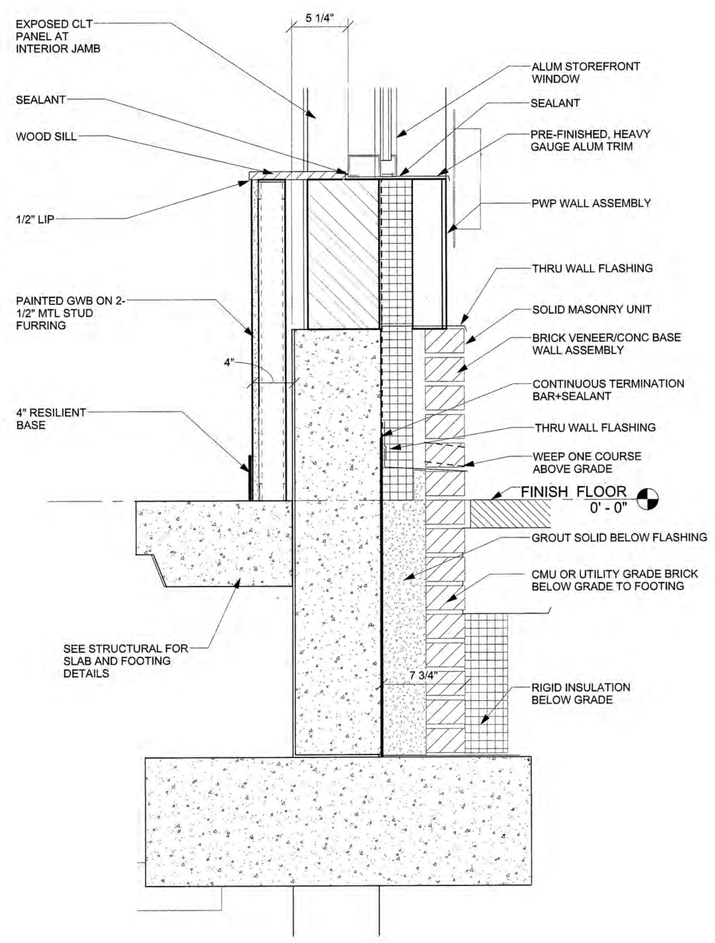

10 SECTION DETAIL
A-450 SCALE: 1 1/2" = 1'-0"

Greenville
NORTH CAROLINA

JACOBS
333 Fayetteville Street, Suite 1100
Raleigh, NC 27601
PH: 919-334-3100 FX: 919-334-3122 www.jacobs.com
North Carolina Engineering Firm License No. F-287
North Carolina Architectural Firm Reg. No. 50757

AYERS SAINT GROSS

Consultants:
ARK Consulting Group, PLLC

Coaly Design
Landscape Architecture + Land Planning

Seals:
JOHN A. STEVERMER, NC LICENSE NO. 5858

General Notes:

Project Client:
CITY OF GREENVILLE

GREENVILLE TRANSPORTATION ACTIVITY CENTER
600 S. Pitt Street, Greenville, NC

Number	Description	Date
0	IFC	05-10-2016

Key Plan: Project North

CAD File:
Project No.: L3005900
Copyright: 2015 Jacobs Engineering Group

Drawing Sheet Title:
SECTION DETAILS

Drawing Sheet Number:
A-450

Owner's Drawing Sheet No.:

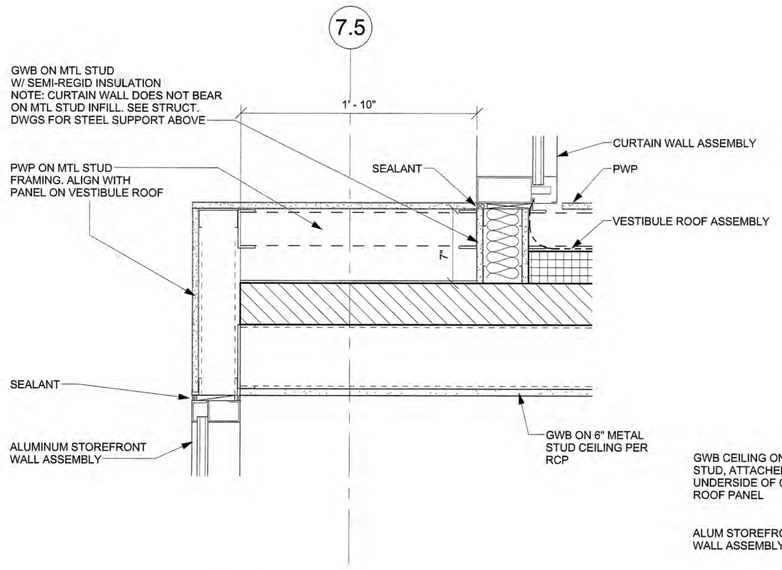

01 SECTION DETAIL
A-451 SCALE: 1 1/2" = 1'-0"

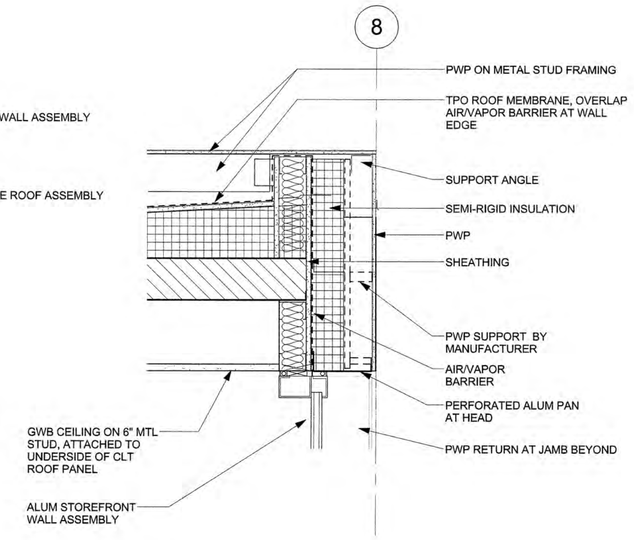

02 SECTION DETAIL
A-451 SCALE: 1 1/2" = 1'-0"

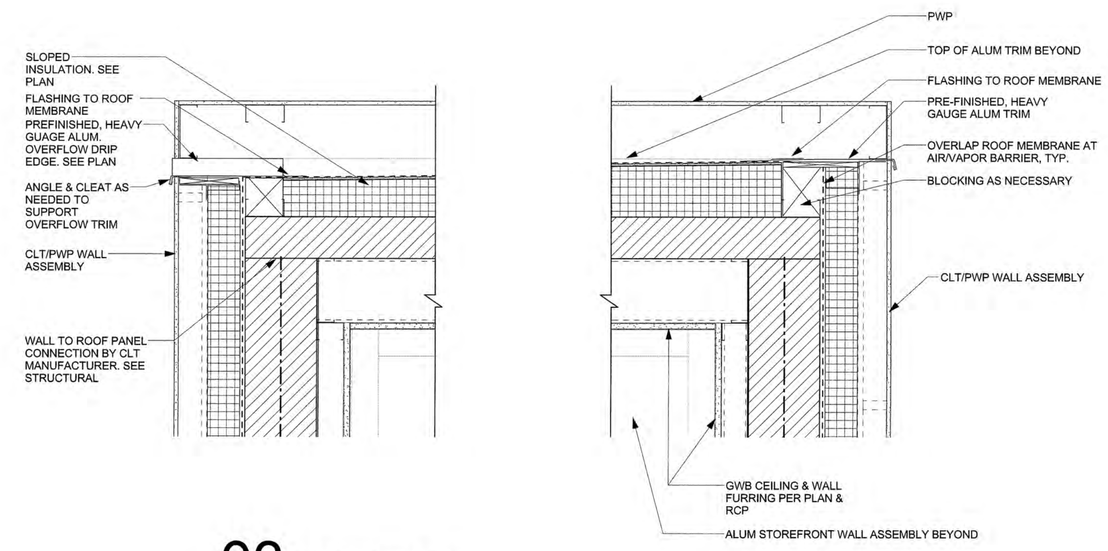

03 SECTION DETAIL
A-451 SCALE: 1 1/2" = 1'-0"

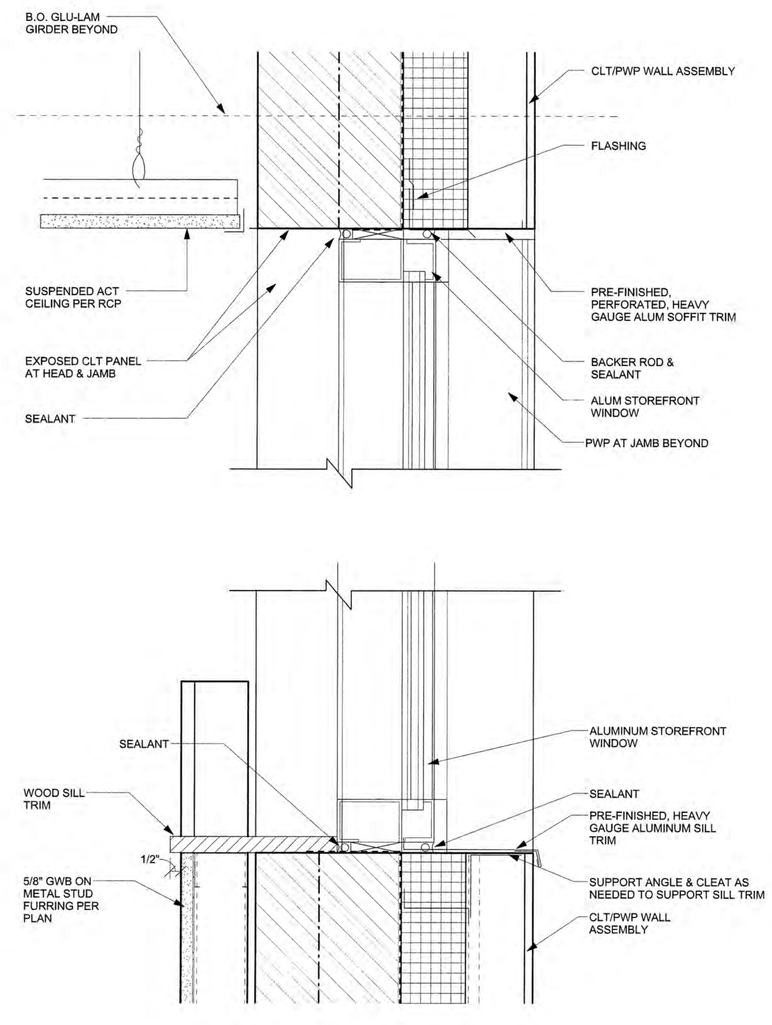

04 SECTION DETAIL
A-451 SCALE: 3" = 1'-0"

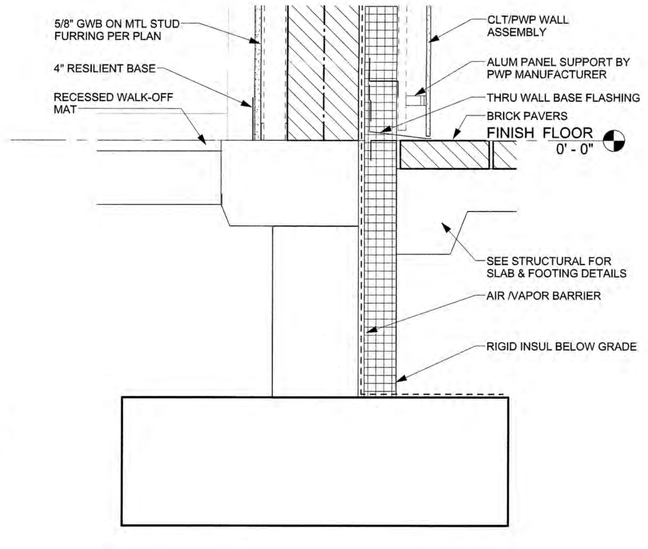

05 SECTION DETAIL
A-451 SCALE: 1 1/2" = 1'-0"

Greenville
NORTH CAROLINA

JACOBS
333 Fayetteville Street, Suite 1100
Raleigh, NC 27601
PH: 919-334-3100 FX: 919-334-3122 www.jacobs.com
North Carolina Engineering Firm License No. F-267
North Carolina Architectural Firm Reg. No. 50757

AYERS SAINT GROSS

Consultants:
ARK Consulting Group, PLLC

Coaly Design
Landscape Architecture + Land Planning

Seals:

JOHN A. STEVERMER, NC LICENSE NO. 5858

General Notes:

Project Client:
CITY OF GREENVILLE

GREENVILLE
TRANSPORTATION
ACTIVITY CENTER
600 S. Pitt Street, Greenville, NC

Number	Description	Date
0	IFC	05-10-2016

Key Plan: Project North

CAD File:
Project No.: L3005900
Copyright: 2015 Jacobs Engineering Group

Drawing Sheet Title:
SECTION DETAILS

Drawing Sheet Number:
A-451

Owner's Drawing Sheet No.:

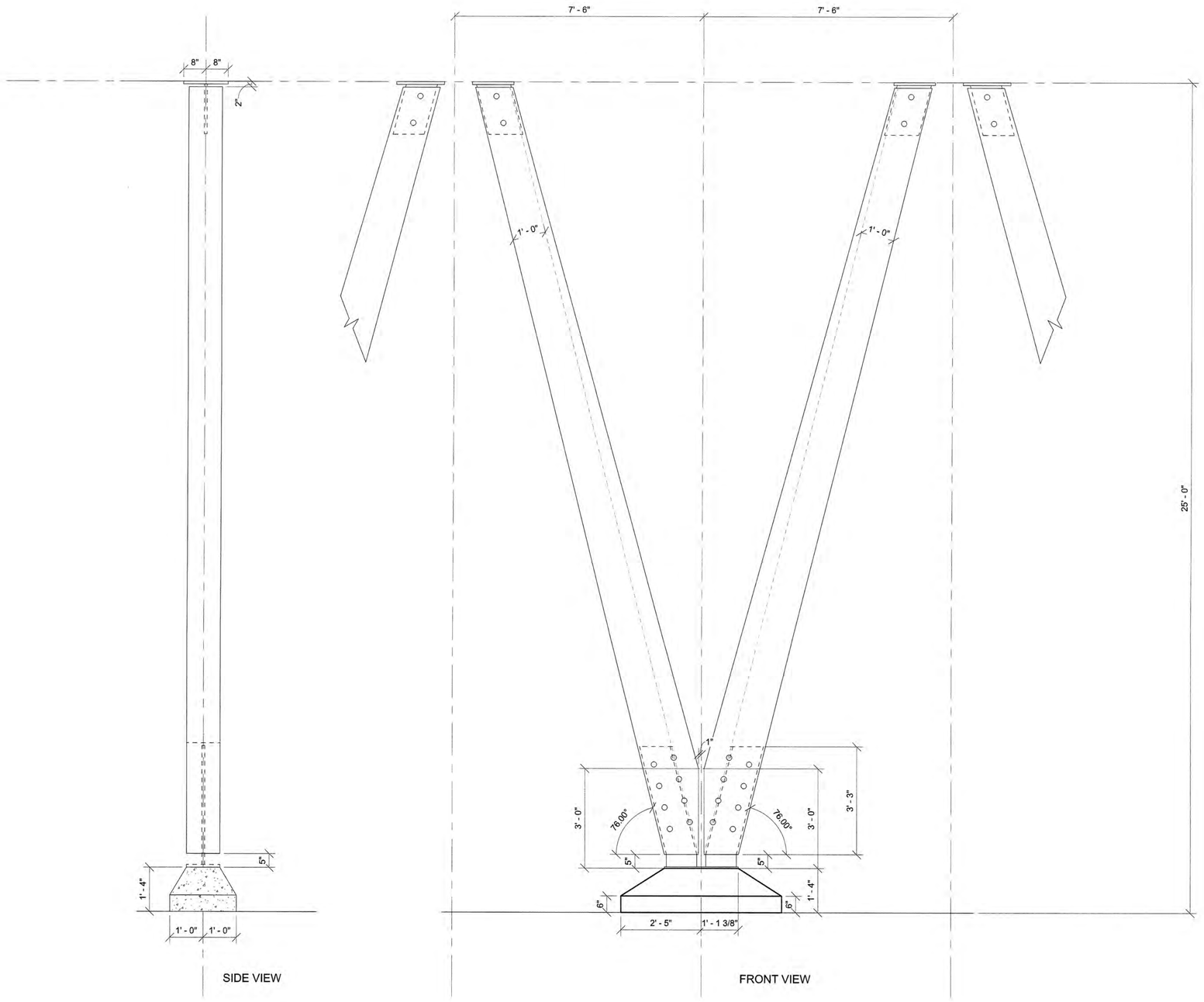

01 GLU-LAM COLUMN ELEVATIONS - NORTH & SOUTH FACADE
A-452 SCALE: 1/2" = 1'-0"

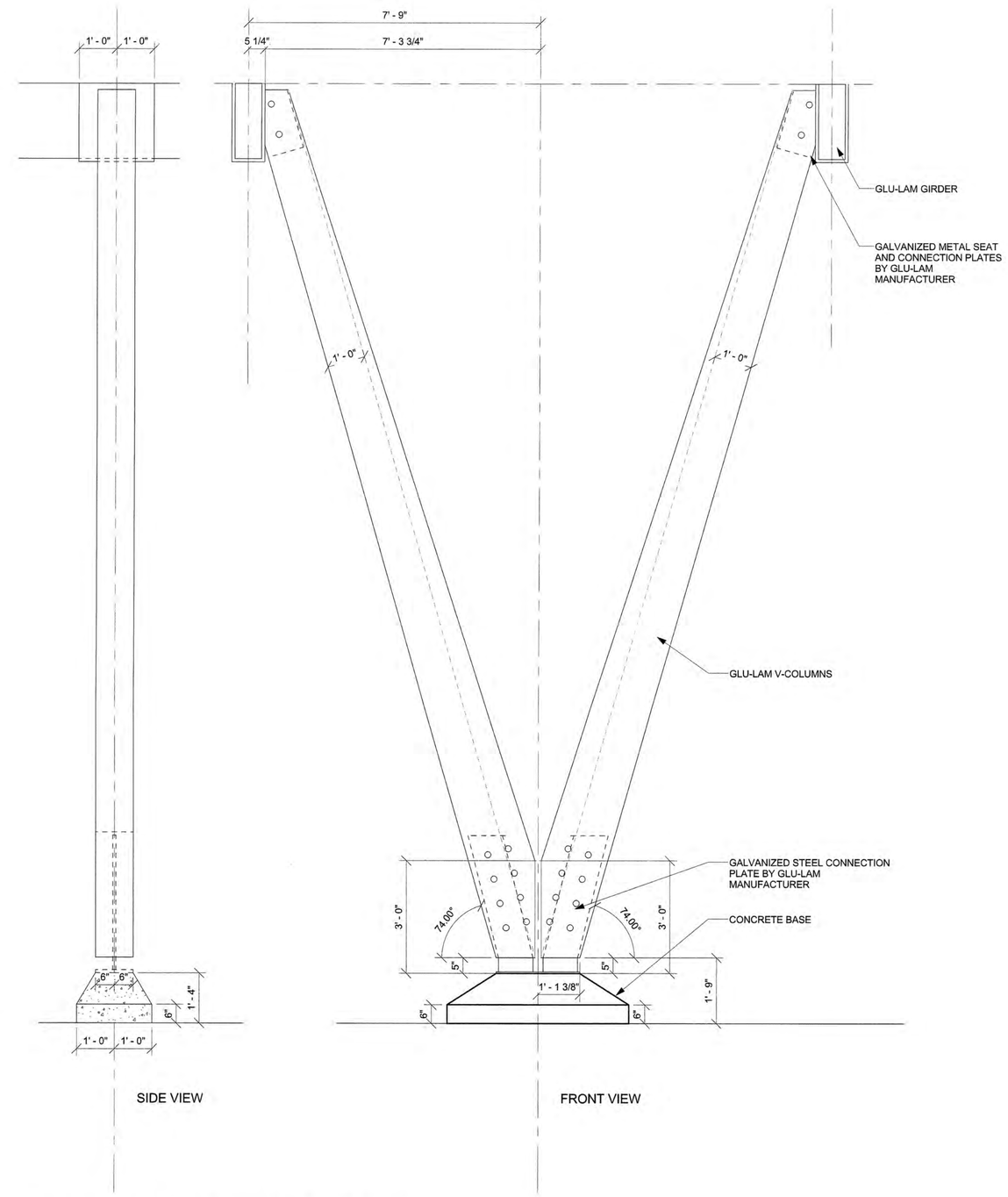

02 GLU-LAM COLUMN ELEVATION - EAST & WEST FACADE
A-452 SCALE: 1/2" = 1'-0"

Greenville
NORTH CAROLINA

JACOBS
333 Fayetteville Street, Suite 1100
Raleigh, NC 27601
PH: 919-334-3100 FX: 919-334-3122 www.jacobs.com
North Carolina Engineering Firm License No. F-287
North Carolina Architectural Firm Reg. No. 50757

AYERS SAINT GROSS

Consultants:
ARK Consulting Group, PLLC

Coaly Design
Landscape Architecture + Land Planning

Seals:

JOHN A. STEVERMER, NC LICENSE NO. 5858

General Notes:

Project Client:
CITY OF GREENVILLE

GREENVILLE TRANSPORTATION ACTIVITY CENTER
600 S. Pitt Street, Greenville, NC

Number	Description	Date
0	IFC	05-10-2016

Key Plan: Project North

CAD File:
Project No.: L3005900
Copyright: 2015 Jacobs Engineering Group

Drawing Sheet Title:
GLU-LAM COL. DETAILS

Drawing Sheet Number:
A-452

Owner's Drawing Sheet No.:

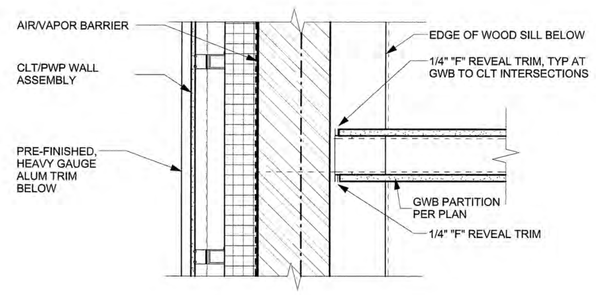

1 PLAN DETAIL
A-460 SCALE: 1 1/2" = 1'-0"

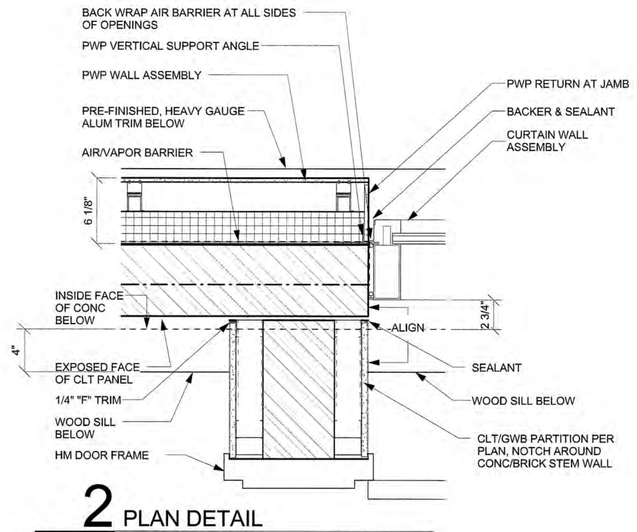

2 PLAN DETAIL
A-460 SCALE: 1 1/2" = 1'-0"

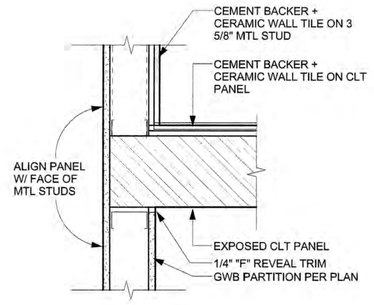

3 PLAN DETAIL
A-460 SCALE: 1 1/2" = 1'-0"

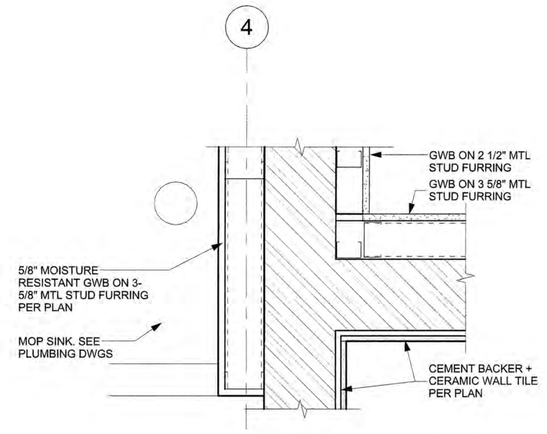

4 PLAN DETAIL
A-460 SCALE: 1 1/2" = 1'-0"

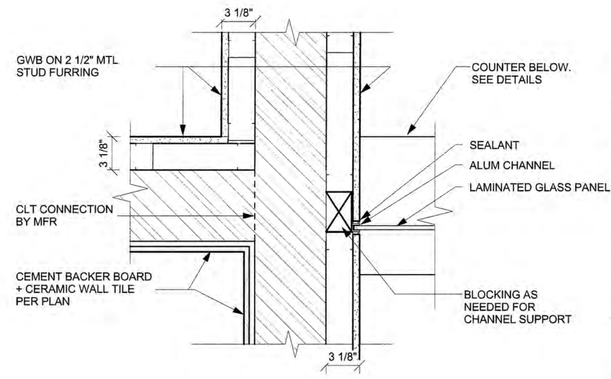

5 PLAN DETAIL
A-460 SCALE: 1 1/2" = 1'-0"

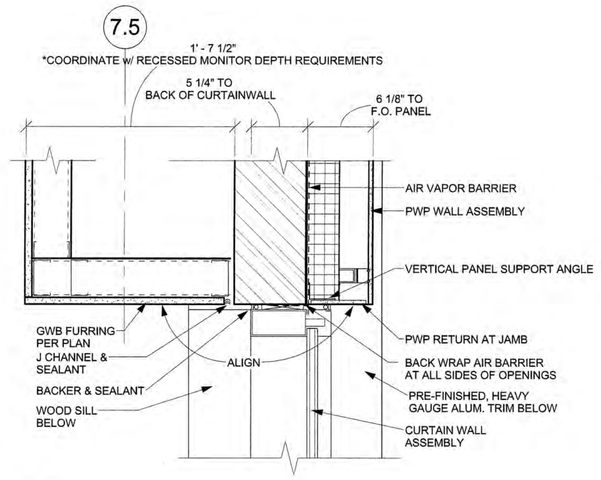

6 PLAN DETAIL
A-460 SCALE: 1 1/2" = 1'-0"

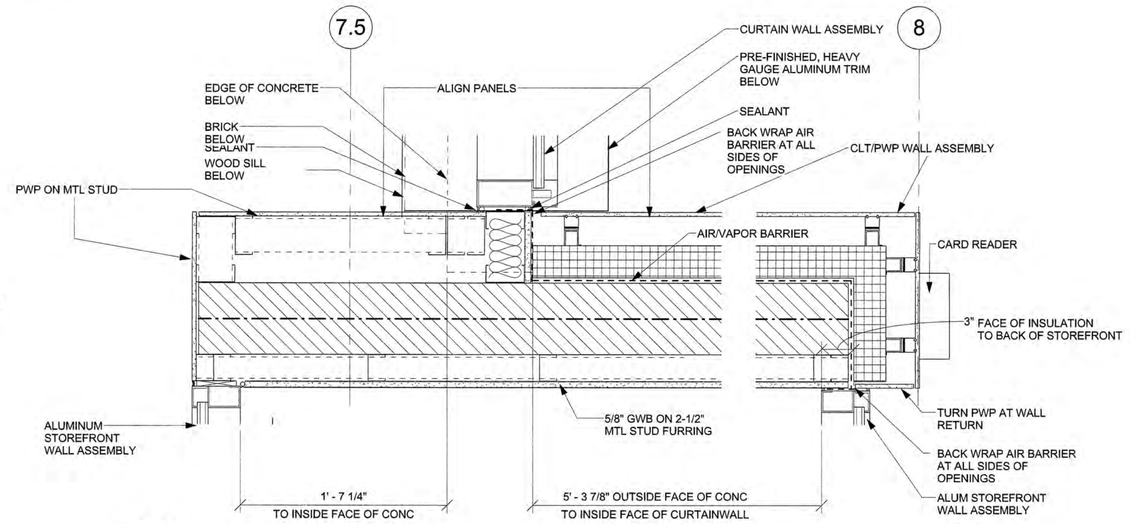

7 PLAN DETAIL
A-460 SCALE: 1 1/2" = 1'-0"

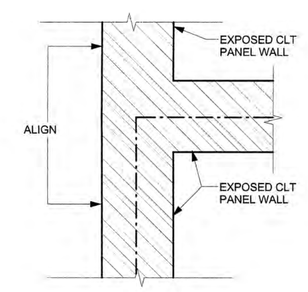

8 PLAN DETAIL
A-460 SCALE: 1 1/2" = 1'-0"

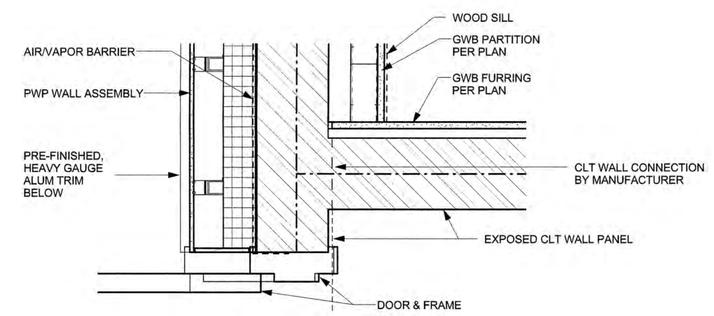

9 PLAN DETAIL
A-460 SCALE: 1 1/2" = 1'-0"

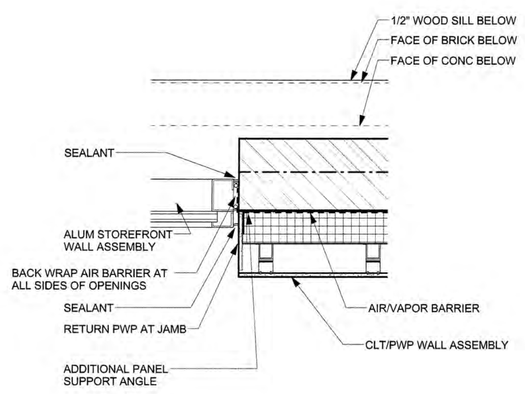

10 PLAN DETAIL
A-460 SCALE: 1 1/2" = 1'-0"

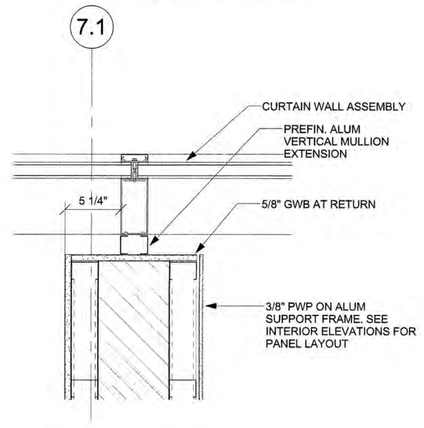

11 PLAN DETAIL
A-460 SCALE: 1 1/2" = 1'-0"

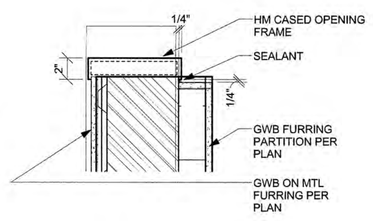

12 PLAN DETAIL
A-460 SCALE: 1 1/2" = 1'-0"

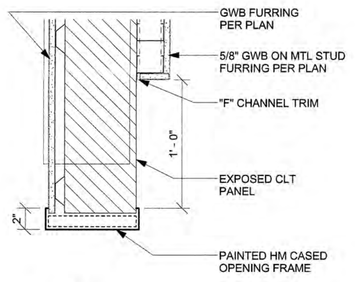

13 PLAN DETAIL
A-460 SCALE: 1 1/2" = 1'-0"

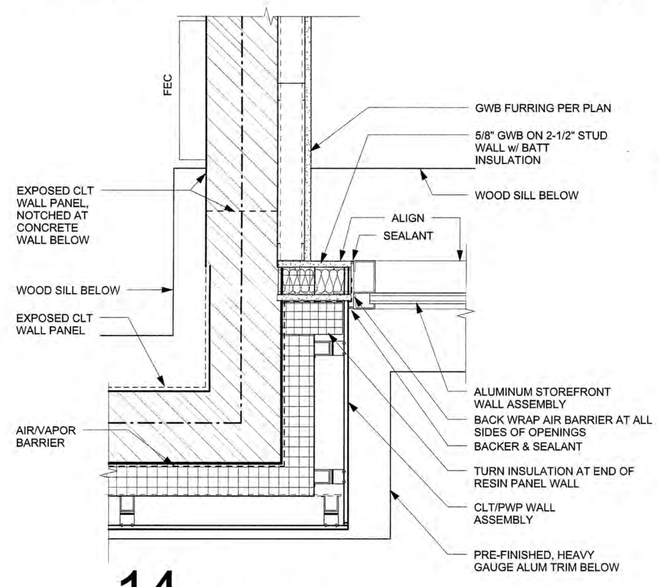

14 PLAN DETAIL
A-460 SCALE: 1 1/2" = 1'-0"

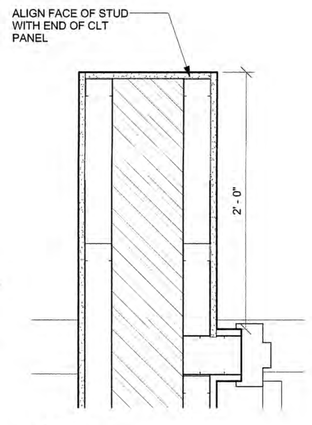

15 PLAN DETAIL
A-460 SCALE: 1 1/2" = 1'-0"

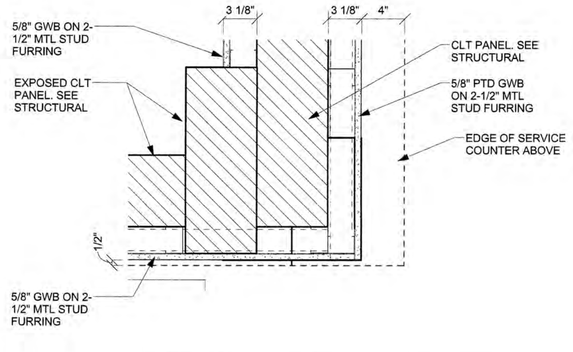

16 PLAN DETAIL @ 12" AFF
A-460 SCALE: 1 1/2" = 1'-0"

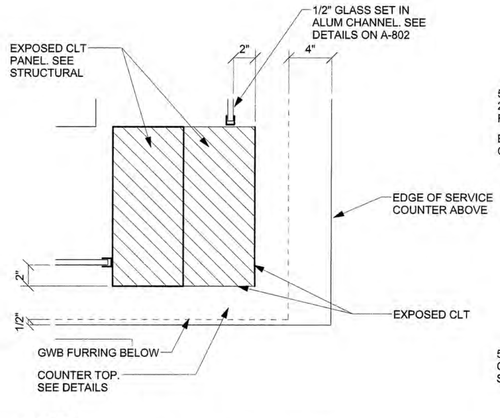

17 PLAN DETAIL @ 42" AFF
A-460 SCALE: 1 1/2" = 1'-0"

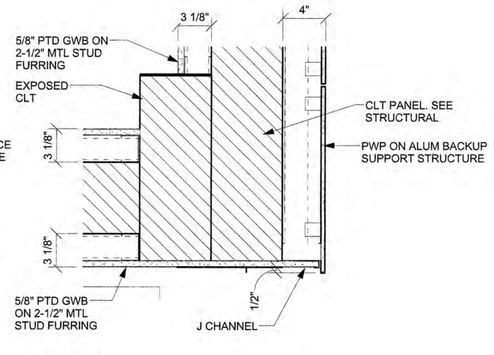

18 PLAN DETAIL @ 100" AFF
A-460 SCALE: 1 1/2" = 1'-0"

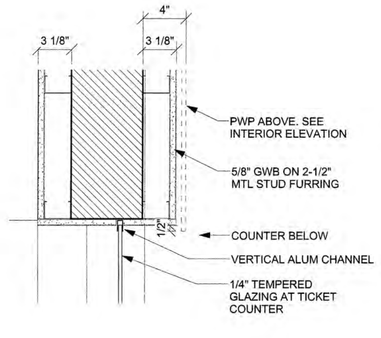

19 PLAN DETAIL
A-460 SCALE: 1 1/2" = 1'-0"

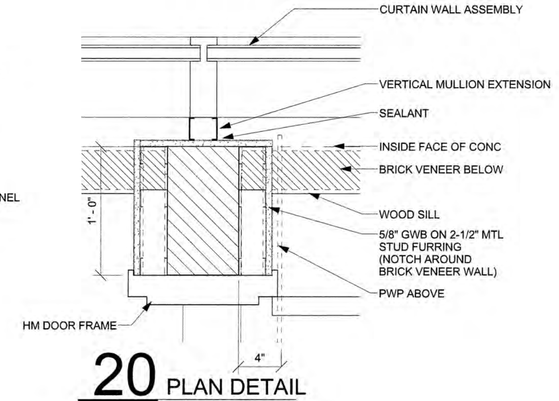

20 PLAN DETAIL
A-460 SCALE: 1 1/2" = 1'-0"

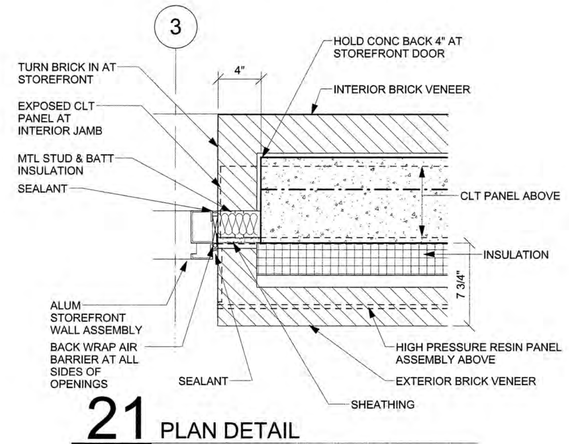

21 PLAN DETAIL
A-460 SCALE: 1 1/2" = 1'-0"

Greenville
NORTH CAROLINA

JACOBS
333 Fayetteville Street, Suite 1100
Raleigh, NC 27601
PH: 919-334-3100 FX: 919-334-3122 www.jacobs.com
North Carolina Engineering Firm License No. F-287
North Carolina Architectural Firm Reg. No. 50757

AYERS SAINT GROSS

Consultants:
ARK Consulting Group, PLLC

Coaly Design
Landscape Architecture + Land Planning

Seals:

JOHN A. STEVERMER
REGISTERED ARCHITECT
5858
05-09-16
NORTH CAROLINA
DURHAM, N.C.

JOHN A. STEVERMER, NC LICENSE NO. 5858

General Notes:

Project Client:
CITY OF GREENVILLE

GREENVILLE TRANSPORTATION ACTIVITY CENTER
600 S. Pitt Street, Greenville, NC

Number	Description	Date
0	IFC	05-10-2016

Key Plan: Project North

CAD File:
Project No.: L3005900
Copyright: 2015 Jacobs Engineering Group

Drawing Sheet Title:
PLAN DETAILS

Drawing Sheet Number:
A-460

Owner's Drawing Sheet No.:

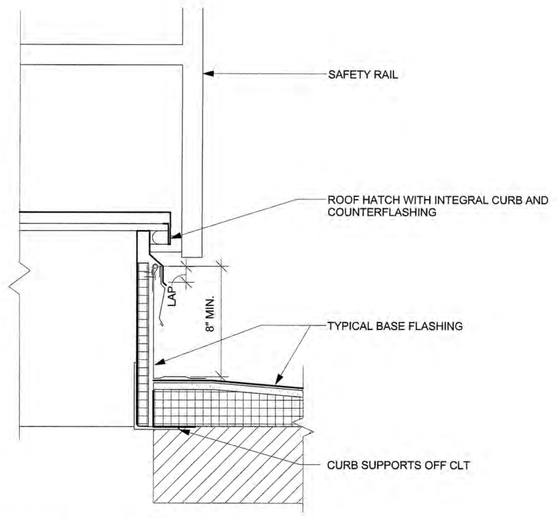

01 ROOF HATCH DETAIL, TYP.
A-490 SCALE: 1 1/2" = 1'-0"

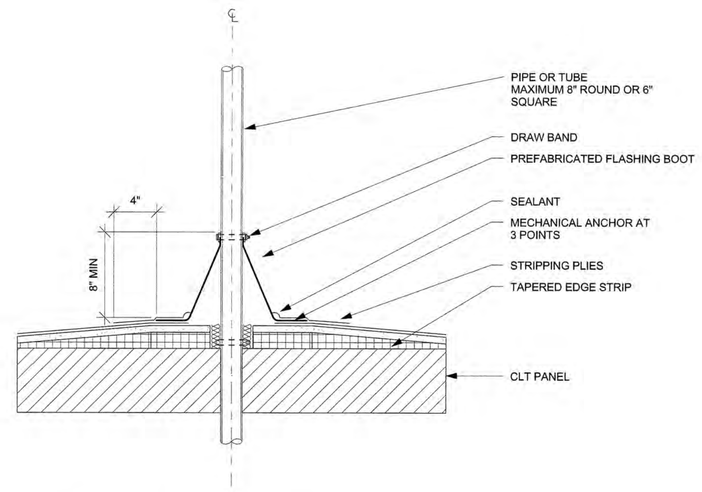

02 SMALL PIPE OR TUBE PENETRATION
A-490 SCALE: 1 1/2" = 1'-0"

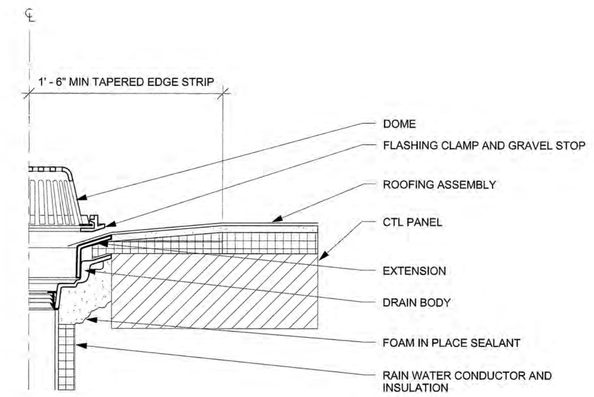

03 ROOF DRAIN DETAIL, TYP.
A-490 SCALE: 1 1/2" = 1'-0"

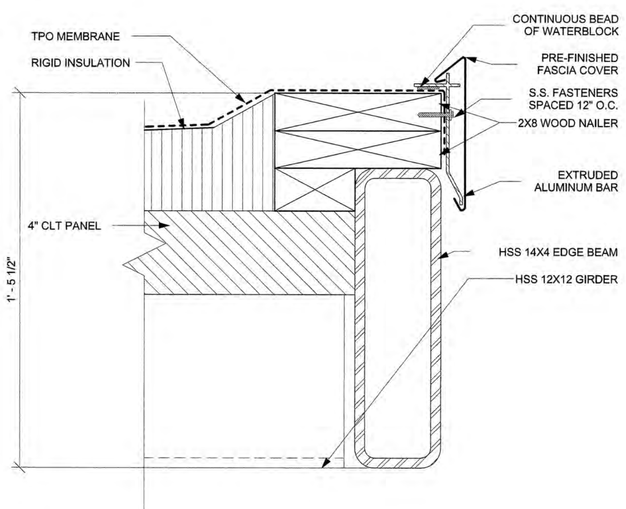

04 CANOPY ROOF EDGE DETAIL, TYP.
A-490 SCALE: 3" = 1'-0"

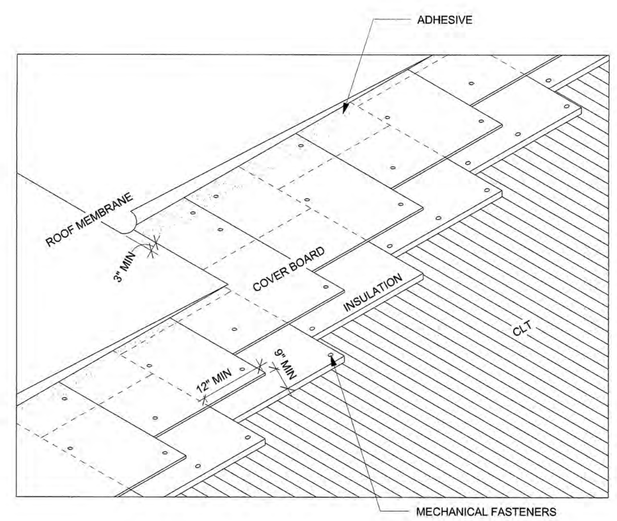

05 ROOF ASSEMBLY
A-490 SCALE: 3" = 1'-0"

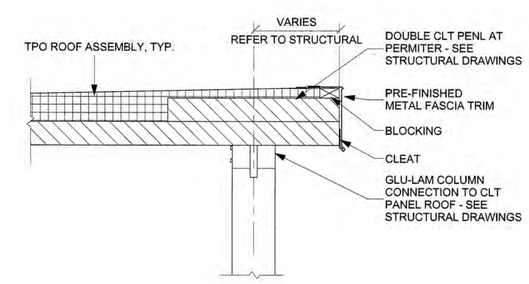

06 ROOF EDGE DETAIL, TYP.
A-490 SCALE: 1/2" = 1'-0"

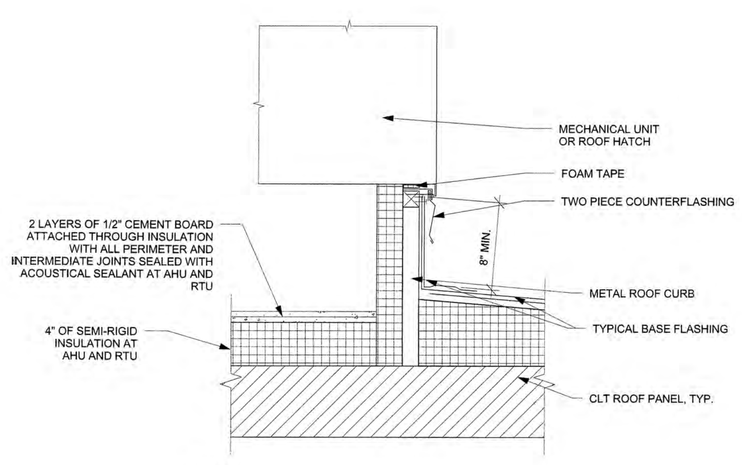

7 TYPICAL MECHANCIAL UNIT CURB
A-490 SCALE: 1 1/2" = 1'-0"

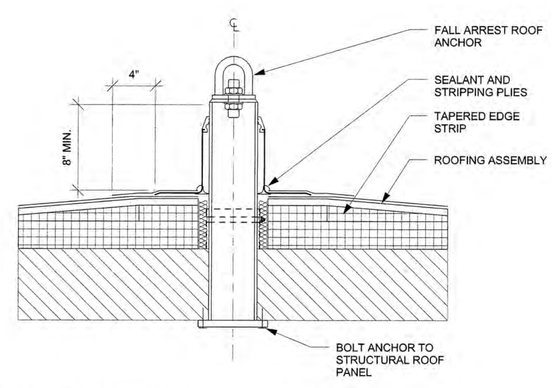

8 FALL ARREST ANCHOR ROOF DETAIL
A-490 SCALE: 1 1/2" = 1'-0"

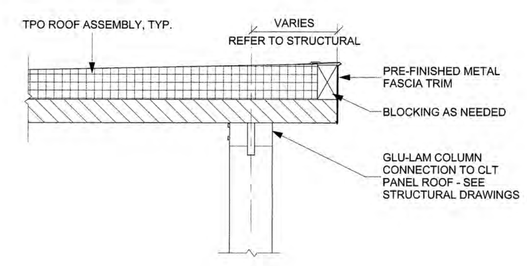

9 ROOF EDGE DETAIL - EAST END , TYP.
A-490 SCALE: 1/2" = 1'-0"

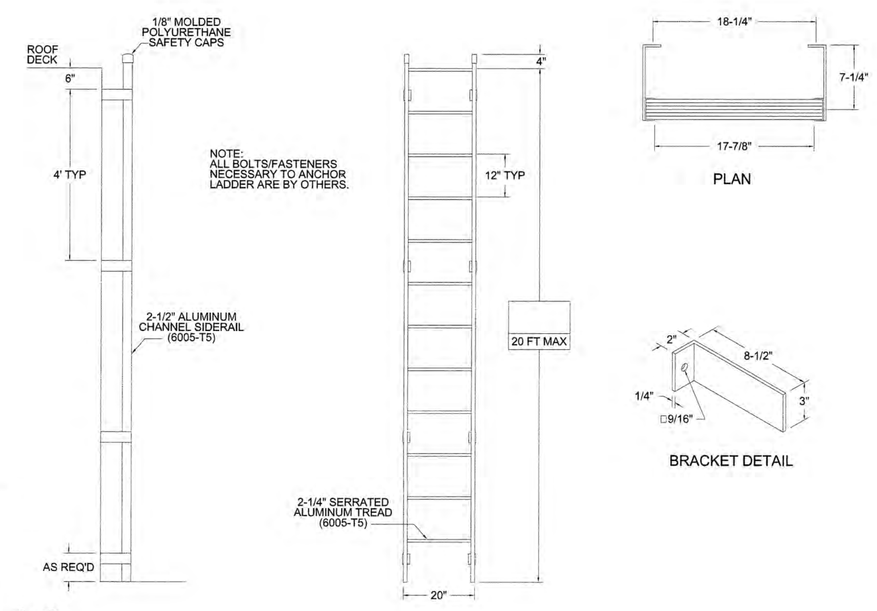

10 ROOF LADDER DETAIL
A-490 SCALE: 1/2" = 1'-0"

Greenville
NORTH CAROLINA

JACOBS

333 Fayetteville Street, Suite 1100
Raleigh, NC 27601
PH: 919-334-3100 FX: 919-334-3122 www.jacobs.com
North Carolina Engineering Firm License No. F-287
North Carolina Architectural Firm Reg. No. 50757

AYERS SAINT GROSS

Consultants:

ARK Consulting Group, PLLC

Coaly Design
Landscape Architecture + Land Planning

Seals:

JOHN A. STEVERMER REGISTERED ARCHITECT 5858 NORTH CAROLINA DURHAM, N.C. 05-09-16

JOHN A. STEVERMER, NC LICENSE NO. 5858

General Notes:

Project Client:
CITY OF GREENVILLE

GREENVILLE TRANSPORTATION ACTIVITY CENTER
600 S. Pitt Street, Greenville, NC

Number	Description	Date
0	IFC	05-10-2016

Key Plan: Project North

CAD File:
Project No.: L3005900
Copyright: 2015 Jacobs Engineering Group

Drawing Sheet Title:
ROOF DETAILS

Drawing Sheet Number:
A-490

Owner's Drawing Sheet No.:

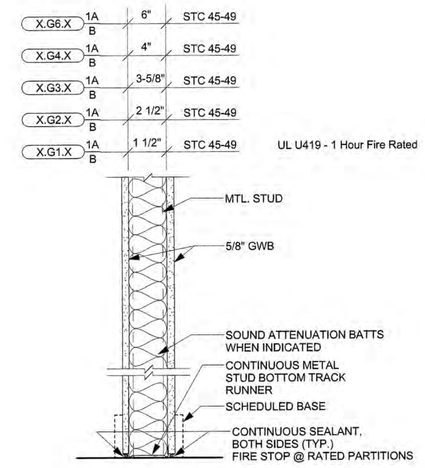

1 GWB + MTL STUD
A-500 SCALE: 1 1/2" = 1'-0"

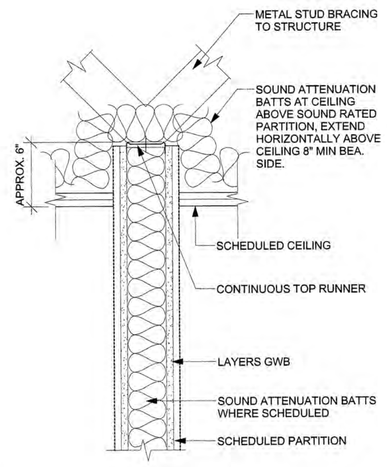

2 HEAD CONDITION: 6" ABOVE CEILING
A-500 SCALE: 1 1/2" = 1'-0"

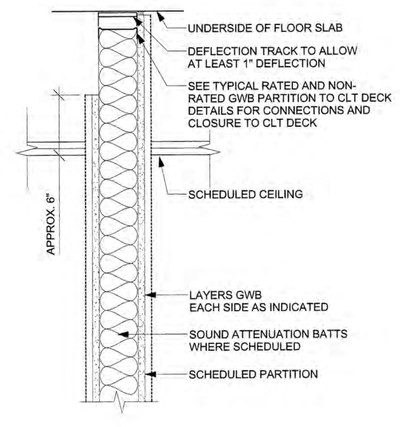

3 HEAD CONDITIONS: TO DECK
A-500 SCALE: 1 1/2" = 1'-0"

WALL TYPE INDICATOR LEGEND

NOTE:
THE COMPONENTS OF THE PARTITION TYPE ARE ASSEMBLED FROM LEFT TO RIGHT FOR VERTICAL ORIENTED PARTITIONS AND FROM TOP TO BOTTOM FOR HORIZONTAL PARTITIONS

X.XX.XX#.XX.X XB A

SURFACE CODE

D ONE LAYER OF GYPSUM WALLBOARD
D2 TWO LAYERS OF GYPSUM WALLBOARD
D3 THREE LAYERS OF GYPSUM WALLBOARD
AR ONE LAYER ABUSE - RESISTANT GYPSUM PANELS
AR2 TWO LAYERS ABUSE - RESISTANT GYPSUM PANELS
MR ONE LAYER OF MOISTURE RESISTANT GYPSUM WALLBOARD
CT CERAMIC TILE
CB ONE LAYER OF CEMENT BOARD
CF COMPOSITE FIBERGLASS PANEL
P PLASTER
XP EXPOSED
WD WOOD ACOUSTIC PANEL
W WOOD PANEL

PERFORMANCE CODE

1 1 HR FIRE RATED
2 2 HR FIRE RATED
3 3 HR FIRE RATED
4 4 HR FIRE RATED

A SOUND ATTENUATION BLANKET (SAB) AND ACOUSTICAL SEALANT REQUIRED
S SMOKE PARTITION
T THERMALLY INSULATED PARTITION (FIRE RATED PARTITION)
V VAPOR RETARD

HEAD CONDITIONS

A EXTEND PARTITION TO UNDERSIDE OF STRUCTURE PER TYPICAL HEAD DETAIL
B STOP PARTITION 6" ABOVE FINISHED CEILING PER TYPICAL HEAD DETAIL
C STOP PARTITION AT UNDERSIDE OF FINISH CEILING PER TYPICAL HEAD DETAIL
D EXTEND METAL STUDS AND ONE LAYER OF GWB TO UNDERSIDE OF STRUCTURE SUITABLE FOR FIELD CONDITION PER HEAD DETAIL (ROOM SIDE)
E EXTEND PARTITION TO 7' 2" ABOVE ACCESS FLOOR AND CAP WITH GYPSUM WALLBOARD
F EXTEND FURRING TO 6" ABOVE FINISHED CEILING

S PROVIDE SOUND ATTENUATION BLANKET

SUPPORT CODE

ADD'L SUPPORT CODE

C2 CHASE WALL, W/ 2 2 1/2" METAL STUDS - SEE FLOOR PLAN FOR CLEAR DIM BETWEEN STUDS.
C3 CHASE WALL, W/ 2 3 5/8" METAL STUD - SEE FLOOR PLAN FOR CLEAR DIM. BETWEEN STUDS.
TYP. 12" CLEAR BETWEEN STUDS WALL HUNG WC 1-SIDE
TYP. 14" CLEAR BETWEEN STUDS WALL HUNG WC BOTH SIDES

CLT 6 5/8" CLT PANEL

F1 7/8" FURRING CHANNEL
F2 2 1/2" FURRING CHANNEL
F3 3 5/8" FURRING CHANNEL
G1 1 1/2" METAL STUD
G2 2 1/2" METAL STUD
G3 3 5/8" METAL STUD
G4 4" METAL STUD
G6 6" METAL STUD
2G6 6" METAL STUD - 1" CLEAR - 6" METAL STUD
S2 2 1/2" C-H STUD W/ 1" GYPSUM WALLBOARD LINER
S4 4" C-H STUD W/ 1" GYPSUM WALLBOARD LINER
S6 6" C-H STUD W/ 1" GYPSUM WALLBOARD LINER
M4 4" CMU (NOMINAL)
M6 6" CMU (NOMINAL)
M8 8" CMU (NOMINAL)
M12 12" CMU (NOMINAL)
R RESILIENT CHANNEL

GENERAL NOTE

1. REQUIRED FIRE RATINGS FOR PARTITIONS ARE INDICATED ON PLANS
2. REFER TO DRAWING A-501 FOR TYPICAL PARTITION HEAD DETAILS
3. REFER TO DRAWING A-500 FOR TYPICAL PARTITION DETAILS

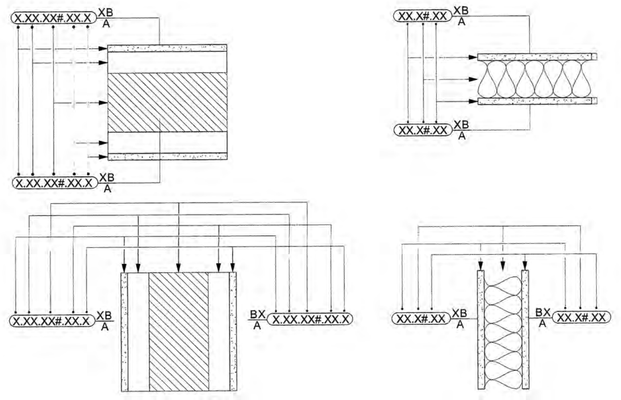

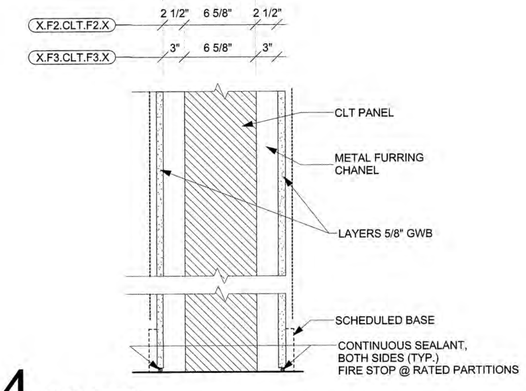

4 CLT, TYP.
A-500 SCALE: 1 1/2" = 1'-0"

Greenville
NORTH CAROLINA

JACOBS
333 Fayetteville Street, Suite 1100
Raleigh, NC 27601
PH: 919-334-3100 FX: 919-334-3122 www.jacobs.com
North Carolina Engineering Firm License No. F-287
North Carolina Architectural Firm Reg. No. 50757

AYERS SAINT GROSS

Consultants:
ARK Consulting Group, PLLC

Coaly Design
Landscape Architecture + Land Planning

Seals:
JOHN A. STEVERMER, REGISTERED ARCHITECT 5858 NORTH CAROLINA DURHAM, N.C.
05-09-16

JOHN A. STEVERMER, NC LICENSE NO. 5858

General Notes:

Project Client:
CITY OF GREENVILLE

GREENVILLE TRANSPORTATION ACTIVITY CENTER
600 S. Pitt Street, Greenville, NC

Number	Description	Date
0	IFC	05-10-2016

Key Plan: Project North

CAD File:
Project No.: L3005900
Copyright: 2015 Jacobs Engineering Group

Drawing Sheet Title:
PARTITION TYPES & HEAD DETAILS

Drawing Sheet Number:
A-500

Owner's Drawing Sheet No.:

DOOR SCHEDULE

DOOR #	LOCATION	PANEL TYPE	PANEL NOMINAL SIZE WIDTH	PANEL NOMINAL SIZE HEIGHT	PANEL THICKNESS	PANEL MATERIAL	PANEL FINISH	FRAME TYPE	FRAME DETAIL JAMB	FRAME DETAIL HEAD	FRAME DETAIL THRSHLD.	FRAME FINISH	FIRE RATING	HARDWARE SET #	CARD READER	REMARKS
1ST FLOOR																
EXT																
100A	EXT	FG	3' - 0"	8' - 0"	0' - 1 3/4"	GLASS	FF	AL	3/A-510	3/A-510	5B/A-510	FF	0	NOTE 1		
100B	EXT	FG	3' - 0"	8' - 0"	0' - 1 3/4"	GLASS	FF	AL	3/A-510	3/A-510	5B/A-510	FF	0	NOTE 1		
113	EXT	FG	3' - 0"	8' - 0"	0' - 1 3/4"	GLASS	FF	AL	3/A-510	3/A-510	4/A-510	FF	0	NOTE 1		SEE ELEVATION A-413
117B	EXT	F	3' - 6"	7' - 0"	0' - 1 3/4"	HM	PT-1	HM	8/A-510	8/A-510	9/A-510	PT-1	0	NOTE 1		
119B	EXT	NL	3' - 0"	7' - 0"	0' - 1 3/4"	HM	PT-1	HM	8/A-510	8/A-510	9/A-510	PT-1	0	NOTE 1		
122	EXT	F	3' - 6"	7' - 0"	0' - 1 3/4"	FIBG	FF	HM	8/A-510	8/A-510	9/A-510	?	0	NOTE 1		
124	EXT	FG	3' - 0"	8' - 0"	0' - 1 3/4"	GLASS	FF	AL	3/A-510	3/A-510	4/A-510	FF	0	NOTE 1	X	SEE ELEVATION A-413
INT																
100C	INT	FG	3' - 0"	8' - 0"	0' - 1 3/4"	GLASS	FF	AL	3/A-510	3/A-510	5/A-510		0	NOTE 1		SEE ELEVATION A-413
100D	INT	FG	3' - 0"	8' - 0"	0' - 1 3/4"	GLASS	FF	AL	3/A-510	3/A-510	5/A-510		0	NOTE 1		SEE ELEVATION A-413
101A	INT	F	3' - 0"	7' - 0"	0' - 1 3/4"	W	PT-1	HM	7/A-510	7/A-510	- -	PT-1	0	NOTE 1	X	
101B	INT	NL	3' - 0"	7' - 0"	0' - 1 3/4"	W	PT-1	HM	7/A-510	7/A-510	- -	PT-1	0	NOTE 1	X	
102	INT	NL	3' - 0"	7' - 0"	0' - 1 3/4"	W	PT-1	HM	7/A-510	7/A-510	- -	PT-1	0	NOTE 1	X	
103A	INT	OPENING	4' - 0"	7' - 0"				HM	7/A-510	7/A-510	- -	PT-1				
103B	INT	OPENING	4' - 0"	7' - 0"				HM	7/A-510	7/A-510	- -	PT-1				
104B	INT	NL	3' - 0"	7' - 0"	0' - 1 3/4"	W	PT-1	HM	7/A-510	7/A-510	- -	PT-1	0	NOTE 1	X	
105	INT	F	3' - 0"	7' - 0"	0' - 1 3/4"	W	PT-1		7/A-510	7/A-510	10/A-510	PT-1	0	NOTE 1		UNDERCUT DOOR
106	INT	F	3' - 0"	7' - 0"	0' - 1 3/4"	W	PT-1		7/A-510	7/A-510	10/A-510	PT-1	0	NOTE 1		UNDERCUT DOOR
107	INT	F	3' - 0"	7' - 0"	0' - 1 3/4"	W	PT-1	HM	7/A-510	7/A-510	- -	PT-1	0	NOTE 1		UNDERCUT DOOR
108	INT	F	3' - 0"	7' - 0"	0' - 1 3/4"	W	PT-1	HM	7/A-510	7/A-510	11/A-510	PT-1	0	NOTE 1		
109	INT	F	3' - 0"	7' - 0"	0' - 1 3/4"	W	PT-1	HM	7/A-510	7/A-510	11/A-510	PT-1	0	NOTE 1		
110	INT	OPENING	4' - 0"	7' - 0"				HM								NOT USED - ELEVATOR OPENING
111	INT	F	3' - 0"	7' - 0"	0' - 1 3/4"	W	PT-1	HM	7/A-510	7/A-510	10/A-510	PT-1	0	NOTE 1		DOOR GRILLE
112	INT	F	3' - 0"	7' - 0"	0' - 1 3/4"	W	PT-1	HM	7/A-510	7/A-510	10/A-510	PT-1	0	NOTE 1		DOOR GRILLE
114	INT	NL	3' - 0"	7' - 0"	0' - 1 3/4"	W	PT-1	HM	7A/A-510	7A/A-510	12/A-510	PT-1	0	NOTE 1	X	UNDERCUT DOOR
114B	INT	VISION PANEL	4' - 8"	7' - 0"			GLASS	HM	3/A-510	7/A-510		PT-1	0	-		SEE ELEVATION A-701
115	INT	NL	3' - 0"	7' - 0"	0' - 1 3/4"	W	PT-1	HM	7A/A-510	7A/A-510	12/A-510	PT-1	0	NOTE 1	X	
115B	INT	NL	3' - 0"	7' - 0"	0' - 1 3/4"	W	PT-1	HM	7/A-510	7/A-510	12/A-510	PT-1	0	NOTE 1		
116	INT	NL	3' - 0"	7' - 0"	0' - 1 3/4"	W	PT-1	HM	7/A-510	7/A-510	13/A-510	PT-1	0	NOTE 1		
116B	INT	VISION PANEL	4' - 8"	7' - 0"			GLASS	HM	3/A-510	7/A-510		PT-1	0	-		SEE ELEVATION A-701
117	INT	NL	3' - 0"	7' - 0"	0' - 1 3/4"	W	PT-1	HM	7/A-510	7/A-510	- -	PT-1	0	NOTE 1	X	UNDERCUT DOOR
119	INT	NL	3' - 0"	7' - 0"	0' - 1 3/4"	W	PT-1	HM	8/A-510	8/A-510	- -	PT-1	1 HR	NOTE 1	X	
120	INT	OPENING	5' - 0"	8' - 0"				HM	12/A-460	12/A-460		PT-1	0			
2ND FLOOR																
214					0' - 1"											
EXT																
204A	EXT	FG	3' - 0"	8' - 0"	0' - 1 3/4"	GLASS		AL	10/A-460	3/A-510	2/A450 SIM	FF	0	NOTE 1		
204B	EXT	FG	3' - 0"	8' - 0"	0' - 1 3/4"	GLASS		AL	10/A-460	3/A-510	2/A450 SIM	FF	0	NOTE 1		
INT																
119C	INT	NL	3' - 0"	7' - 0"	0' - 1 3/4"	W	PT-1	HM	7A/A-510	7A/A-510	9/A-510	PT-1	1 HR	NOTE 1		
201	INT	F	3' - 0"	7' - 0"	0' - 1 3/4"	W	PT-1	SL	7A/A-510	7A/A-510	13/A-510	PT-1	0	NOTE 1	X	UNDERCUT DOOR
201A	INT	2F	6' - 0"	7' - 0"	0' - 1 3/4"	W	PT-1	2HM	7A/A-510	7A/A-510	13/A-510	PT-1	0	NOTE 1		
201B	INT	NL	3' - 0"	7' - 0"	0' - 1 3/4"	W	PT-1	HM	7A/A-510	7A/A-510	13/A-510	PT-1	0	NOTE 1	X	
202	INT	F	3' - 0"	7' - 0"	0' - 1 3/4"	W	PT-1	HM	7/A-510	7/A-510	14/A-510	PT-1	0	NOTE 1	X	DOOR GRILLE
203	INT	F	3' - 0"	7' - 0"	0' - 1 3/4"	W	PT-1	HM	7/A-510	7/A-510	14/A-510	PT-1	0	NOTE 1	X	DOOR GRILLE
204	INT	OPENING	5' - 0"	8' - 0"				HM	10/A-460	10/A-460		PT-1	0			
206	INT	F	3' - 0"	7' - 0"	0' - 1 3/4"	W	PT-1	HM	7/A-510	7/A-510	15/A-510	PT-1	0	NOTE 1		
207	INT	NL	3' - 0"	7' - 0"	0' - 1 3/4"	W	PT-1	HM	7/A-510	7/A-510	13/A-510	PT-1	0	NOTE 1	X	UNDERCUT DOOR
207A	INT	2F	3' - 8"	7' - 0"	0' - 1 3/4"	W	PT-1	2HM	7/A-510	7/A-510	15/A-510	PT-1	0	NOTE 1		
207B	INT	2F	3' - 8"	7' - 0"	0' - 1 3/4"	W	PT-1	2HM	7/A-510	7/A-510	15/A-510	PT-1	0	NOTE 1		
208	INT	NL	3' - 0"	7' - 0"	0' - 1 3/4"	W	PT-1	HM	7/A-510	7/A-510	13/A-510	PT-1	0	NOTE 1	X	UNDERCUT DOOR
209	INT	F	3' - 6"	7' - 0"	0' - 1 3/4"	W	PT-1	HM	7/A-510	7/A-510	15/A-510	PT-1	0	NOTE 1		
210	INT	OPENING	4' - 0"	7' - 0"				HM								NOT USED - ELEVATOR
211	INT	NL	3' - 0"	7' - 0"	0' - 1 3/4"	W	PT-1	HM	7/A-510	7/A-510	13/A-510	PT-1	0	NOTE 1	X	UNDERCUT DOOR
212	INT	NL	3' - 0"	7' - 0"	0' - 1 3/4"	W	PT-1	HM	7/A-510	7/A-510	13/A-510	PT-1	0	NOTE 1		

NOTE:
1. REFER TO SPECIFICATIONS FOR HARDWARE SETS

F = FLUSH
2F = DOUBLE FLUSH
NL = NARROW LITE
2NL = DOUBLE NARROW LITE
FGI = FULL GLASS
2FGI = DOUBLE FULL GLASS

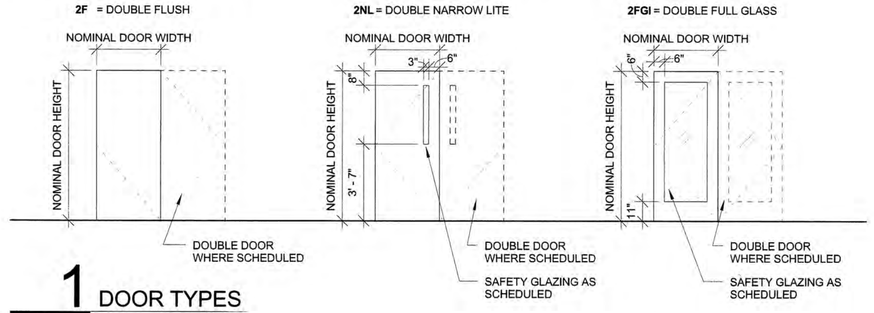

1 DOOR TYPES
A-510 SCALE: 1/4" = 1'-0"

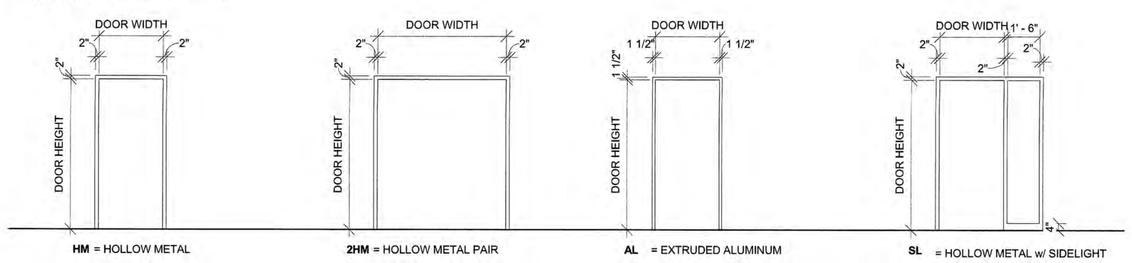

2 FRAME TYPES
A-510 SCALE: 1/4" = 1'-0"

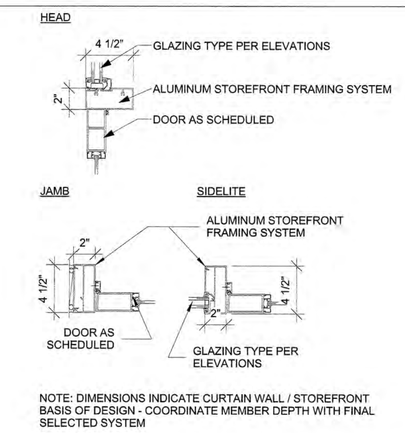

3 STOREFRONT DOOR HEAD /JAMB DETAIL
A-510 SCALE: 1 1/2" = 1'-0"

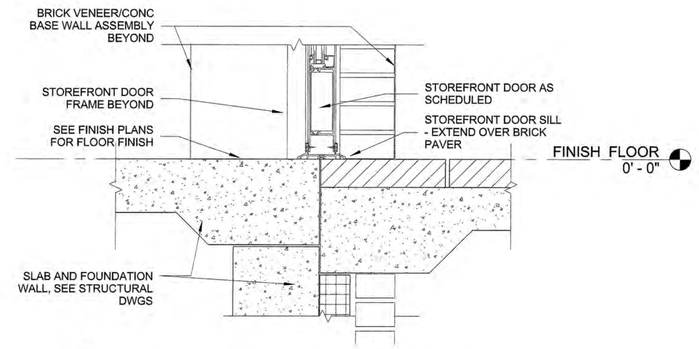

4 STOREFRONT DOOR @ EXTERIOR
A-510 SCALE: 1 1/2" = 1'-0"

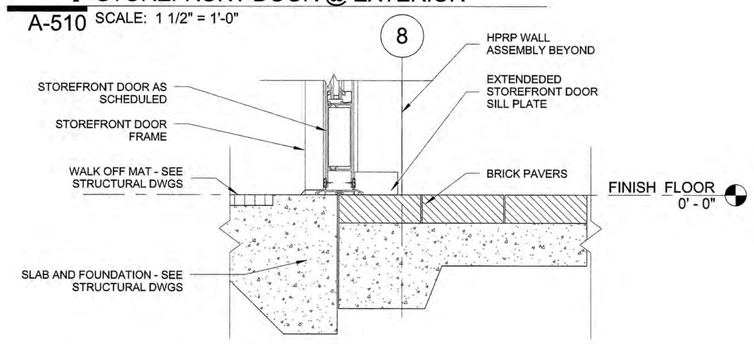

5B THRESHOLD - STOREFRONT DOOR @ VESTIBULE, EXT.
A-510 SCALE: 1 1/2" = 1'-0"

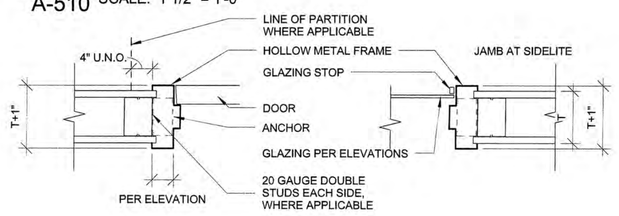

7 INTERIOR PARTITION HM FRAME JAMB/HEAD DETAIL
A-510 SCALE: 1 1/2" = 1'-0"

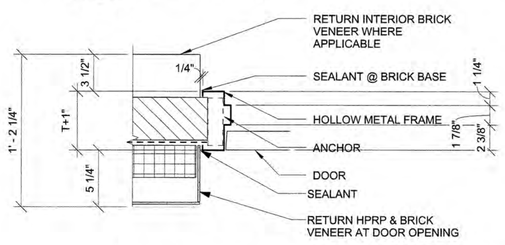

8 EXTERIOR HM FRAME JAMB/HEAD DETAIL
A-510 SCALE: 1 1/2" = 1'-0"

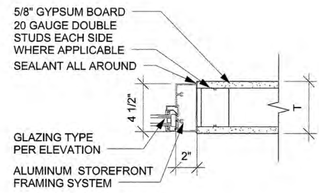

3A STOREFRONT GLAZING HEAD/JAMB DETAIL
A-510 SCALE: 1 1/2" = 1'-0"

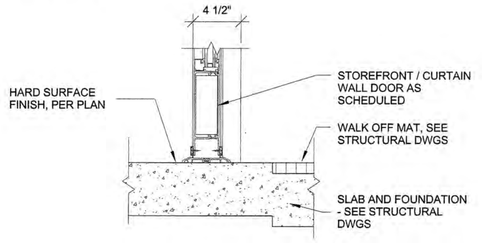

5 THRESHOLD - STOREFRONT DOOR @ VESTIBULE, INT.
A-510 SCALE: 1 1/2" = 1'-0"

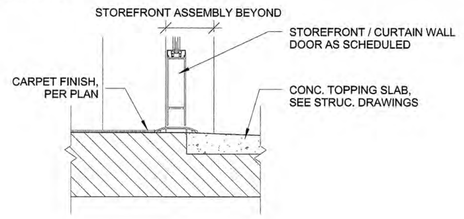

6 THRESHOLD - STOREFRONT DOOR @ TERRACE
A-510 SCALE: 1 1/2" = 1'-0"

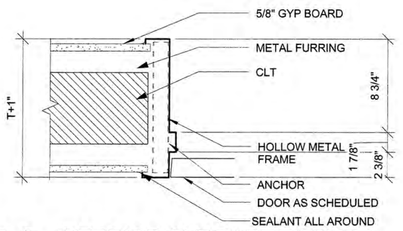

7A INTERIOR CLT PARTITION HM FRAME JAMB/HEAD DETAIL
A-510 SCALE: 1 1/2" = 1'-0"

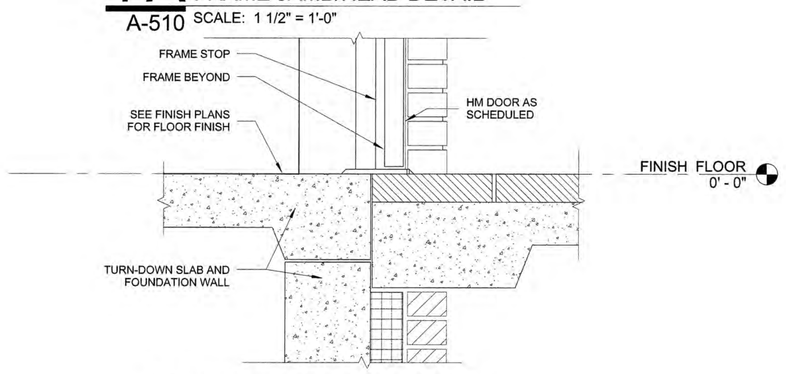

9 THRESHOLD - HM DOOR @ EXTERIOR
A-510 SCALE: 1 1/2" = 1'-0"

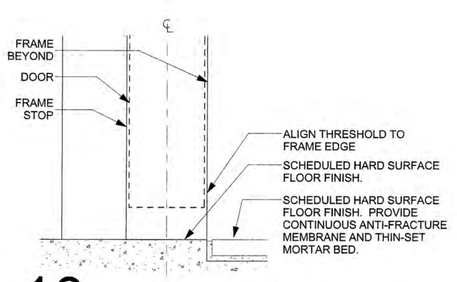

10 THRESHOLD - SLAB TO TILE
A-510 SCALE: 6" = 1'-0"

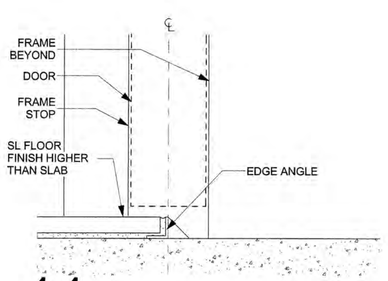

11 THRESHOLD - SLAB TO SL
A-510 SCALE: 6" = 1'-0"

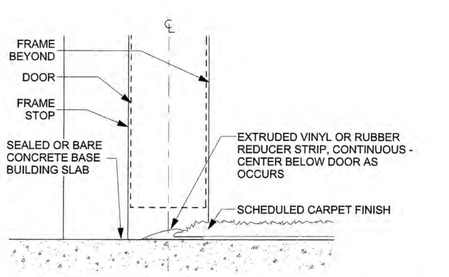

12 THRESHOLD - SLAB TO CARPET
A-510 SCALE: 6" = 1'-0"

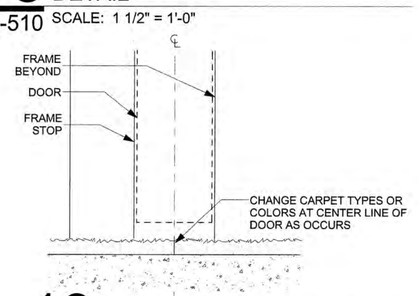

13 THRESHOLD - CARPET TO CARPET
A-510 SCALE: 6" = 1'-0"

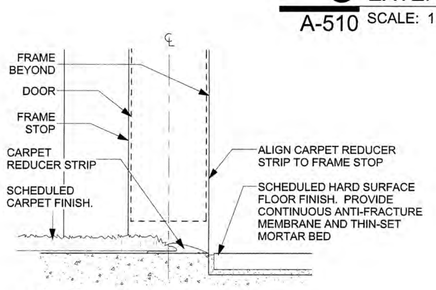

14 THRESHOLD -CARPET TO TILE
A-510 SCALE: 6" = 1'-0"

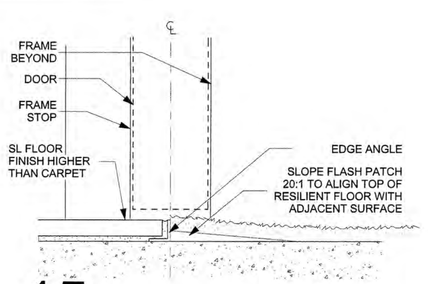

15 THRESHOLD - CARPET TO SL
A-510 SCALE: 6" = 1'-0"

Greenville
NORTH CAROLINA

JACOBS
333 Fayetteville Street, Suite 1100
Raleigh, NC 27601
PH: 919-334-3100 FX: 919-334-3122 www.jacobs.com
North Carolina Engineering Firm License No. F-287
North Carolina Architectural Firm Reg. No. 50757

AYERS SAINT GROSS

Consultants:
ARK Consulting Group, PLLC

Coaly Design
Landscape Architecture + Land Planning

Seals:
JOHN A. STEVERMER
REGISTERED ARCHITECT
5858
05-09-16
NORTH CAROLINA
DURHAM, N.C.

JOHN A. STEVERMER, NC LICENSE NO. 5858

General Notes:

Project Client:
CITY OF GREENVILLE

GREENVILLE TRANSPORTATION ACTIVITY CENTER
600 S. Pitt Street, Greenville, NC

Number	Description	Date
0	IFC	05-10-2016

Key Plan: Project North

CAD File:
Project No.: L3005900
Copyright: 2015 Jacobs Engineering Group

Drawing Sheet Title:
DOOR & HARDWARE SCHEDULE, FRAME DETAILS

Drawing Sheet Number:
A-510

Owner's Drawing Sheet No.:

FINISH SCHEDULE

FINISH GROUP / SPACE TYPE		FLOOR	BASE	WALL	MILLWORK or GLAZING	CEILING	REFERENCE ELEVATION or PLAN	REMARKS
100	LOBBY/WAITING	SC-1/CT-1	RB-1	PT-1	SS-2	OPEN TO ABOVE	1, 2, 3, 4/A-700	
100A	VEST.	WO-1	RB-1	PT-1	-	GWB	-	
100B	STAIR 1	SC-1	RB-1	PT-1	-	-	-	SEE NOTES: 3
100C	VEST.	SC-1	RB-1	PT-1	-	GWB	-	SEE NOTES: 1, 2, and 3
101	TICKET/INFO	CPT-1, SC-1	RB-1	PT-1	PL-1, SS-2	ACT-1	10, 11/A-701	
102	COUNTING	CPT-1	RB-1	PT-1	PL-4	ACT-1	12/A-701	
103	BREAK	SC-1	RB-1	PT-1	PL-1, PL-2, PL-3; SS-1	ACT-1	5, 6, 7, 8/A-701	
104	STAFF CORR.	SC-1, WO-1	RB-1	PT-1	PL-1	ACT-1	1, 2/A-701	SEE NOTES: 1
105	WOMEN	CT-1	-	CT-2,CT-3. PT-1	SS-1	ACT-1/PT-1	A-640	-
106	MEN	CT-1	-	CT-2,CT-3, PT-1	SS-1	ACT-1/PT-1	A-640	SEE NOTES: 2
107	TEL/DATA	SC-2	RB-1	PT-1	-	OPEN TO ABOVE	-	SEE NOTES: 2
108	JANITOR	SC-3	RB-1	PT-1	-	OPEN TO ABOVE	-	-
109	ELEC	SC-3	RB-1	PT-1	-	OPEN TO ABOVE	-	-
110	ELEVATOR	CPT-1	-	-	-	-	-	
111	WOMEN	CT-1	-	CT-2,CT-3, PT-1	SS-1	ACT-1,PT-1	A-640	
112	MEN	CT-1	-	CT-2,CT-3, PT-1	SS-1	ACT-1,PT-1	A-640	SEE NOTES: 2
113	GALLERY	SC-1	RB-1	PT-2	-	GWB	3, 4/A-701	SEE NOTES: 2
114	MTG ROOM	CPT-1	RB-1	PT-1	-	ACT-1	-	
115	POLICE OFFICE	CPT-1	RB-1	PT-1	PL-1, PL-4	ACT-1	13, 14, 15/A-701	
116	SGT. OFFICE	CPT-1	RB-1	PT-1	-	ACT-1	-	SEE NOTES: 5
117	BIKE/SEG. STORAGE	SC-3	RB-1	PT-1	-	OPEN TO ABOVE	-	
118	WATER SERVICE	SC-3	RB-1	PT-1	-	OPEN TO ABOVE	-	
119	STAIR 2	SC-1	RB-1	PT-1	-	EXPOSED CLT PANEL	-	SEE NOTES: 3
200	PREFUNCTION	CPT-1	RB-1	PT-2	-	EXPOSED CLT PANEL	2/A-700	
200A	VEST.	CPT-1	RB-1	PT-1	-	GWB	-	
201	LARGE CONFERENCE ROOM	CPT-1/CPT-3	RB-1	PT-1	PL-1, PL-4	EXPOSED CLT PANEL	8, 9, 10, 11/A-702	SEE NOTES: 5
201A	MEETING STORAGE	CPT-1	RB-1	PT-1,PT-2	-	EXPOSED CLT PANEL	-	
202	MEN	CT-1	-	CT-2,CT-3,PT-1	-	ACT-1,GYP	A-640	SEE NOTES: 2
203	WOMEN	CT-1	-	CT-2,CT-3,PT-1	-	ACT-1,GYP	A-640	SEE NOTES: 2
204	GALLERY	CPT-1	RB-1	PT-2	-	EXPOSED CLT PANEL	1, 2/A-702	
205	TERRACE	HPC	-	FF	-	EXPOSED CLT PANEL		
206	JANITOR	SC-3	RB-1	PT-1	-	EXPOSED CLT PANEL	-	
207	CORRIDOR	CPT-1	RB-1	PT-1	-	ACT-1	-	
207A	ELECTRICAL	SC-3	RB-1	PT-1	-	EXPOSED CLT PANEL	-	
207B	DATA/TEL	SC-2	RB-1	PT-1	-	EXPOSED CLT PANEL	-	
208	DRIVER TRAINING	CPT-2	RB-1	PT-1	-	ACT-1	6, 7/A-702	SEE NOTES: 5
209	MECHANICAL	SL-1	RB-1	PT-1	-	EXPOSED CLT PANEL	-	
211	TRANSIT OFFICES	CPT-1	RB-1	PT-1	-	ACT-1	-	SEE NOTES: 5
211A	COPIER/PRINTER ROOM	CPT-1	RB-1	PT-1	PL-1, PL-4	ACT-1	3, 4, 5/A-702	SEE NOTES: 5
212	TRANSIT MANAGER	CPT-1	RB-1	PT-1	-	ACT-1	-	SEE NOTES: 5

FINISH LEGEND GENERAL NOTES

A. SEE ALSO SHEET A-510 FOR DOOR AND FRAME INFORMATION. UNLESS NOTED OTHERWISE, FINISH DOORS AND FRAMES TO MATCH ADJACENT WALL FINISH. TO BE SEMI-GLOSS.

B. WHERE MULTIPLE WALL OR FLOOR FINISHES ARE CALLED FOR, SEE ALSO ID-500 series PLANS FOR START-AND-STOP DEMARCATIONS.

C. WHERE MULTIPLE CEILING FINISHES ARE CALLED FOR, SEE ALSO A-500 series PLANS FOR START-AND-STOP DEMARCATIONS.

D. WHERE GWB OR CLT WALL MEETS CARPET OR CONCRETE FLOORING, GC TO INSTALL RB-1; DO NOT INSTALL BASE ON EXPOSED BRICK

E. ALL EXPOSED CLT AND GLULAM TO RECEIVE HPC (INTERIOR AND EXTERIOR)

FINISH LEGEND KEY NOTES

1. AT PANTRY MILLWORK LOCATIONS, VERTICAL SURFACES TO BE PL-1,PL-2 OR PL-3 AND COUNTER AND BACKSPLASH FINISH TO BE SS-1 UNLESS NOTED OTHERWISE.
2. INSTALL CT-2 ON ALL WALLS, UNLESS NOTED OTHERWISE. REFER TO TOILET FINISH PLANS ON A-640.
3. NOT USED
4. FLOOR FINISH ON EXPOSED CLT STAIRS TO BE NON-SLIP
5. WINDOWS TO RECEIVE WINDOW TREATMENTS; SEE SPECS

FINISH LEGEND

CARPET TILE

CPT-1	MANUFACTURER	BOLYU
	STYLE NAME/NO.	MONOGRAM / MNG
	COLOR NAME/NO.	CAPITALS / 55
	TILE SIZE	24" X 24"
	FACE FIBER/YARN	P.E.T / POLYESTER
	BACKING	NEXTERRA
	INSTALLATION	MONOLITHIC
	LOCATION	OFFICE AREAS
CPT-2	MANUFACTURER	BOLYU
	STYLE NAME/NO.	SVELTE / SVL
	COLOR NAME/NO.	SHINING MOMENT / 25
	TILE SIZE	24" X 24"
	FACE FIBER	P.E.T / POLYESTER
	BACKING	NEXTERRA
	INSTALLATION	MONOLITHIC
	LOCATION	ACCENT CARPET
CPT-3	MANUFACTURER	BOLYU
	STYLE NAME/NO.	SVELTE / SVL
	COLOR NAME/NO.	RED HOT / 85
	TILE SIZE	24" X 24"
	FACE FIBER	P.E.T / POLYESTER
	BACKING	NEXTERRA
	INSTALLATION	MONOLITHIC
	LOCATION	ACCENT CARPET

CONCRETE

SC-1	MANUFACTURER	SCOFIELD SYSTEM
	COLOR NAME/NO.	RUSTIC BARK No. 4405
	REMARKS	POLISHED CONCRETE
	LOCATION	REFER TO FINISH SCHEDULE
SC-2	MANUFACTURER	UNITED STATIC CONTROL PRODUCTS
	NAME/NO.	ESD CONCREATE SEALER - ELECTRASEAL ANTI STATIC ESD CONTROL CONCRETE SEALER
	REMARKS	SEALED CONCRETE; OR EQUAL
	LOCATION	REFER TO FINISH SCHEDULE
SC-3	MANUFACTURER	EUCLID CHEMICAL
	COLOR NAME/NO.	AQUA-CURE VOX
	REMARKS	APPLY PER DIRECTIONS
	LOCATION	BIKE/SEG. STORAGE

WALK OFF MATT

WO-1	MANUFACTURER	CONSTRUCTION SPECIALTIES
	STYLE NAME/NO.	64 PETITRED
	COLOR NAME/NO.	WROUGHT IRON
	SIZE	SEE PLANS
	REMARKS	REFER TO SPECS
	LOCATION	ENTRY VESIBULE, STAFF CORR.

CERAMIC TILE

CT-1	MANUFACTURER	PANTHEON
	STYLE NAME/NO.	ENDURE
	COLOR NAME/NO.	URB-015
	TILE SIZE	12" X 24"
	FINISH	MATT
	GROUT	CUSTOM BUILDING PRODUCTS: #335 WINTER GRAY
	LOCATION	RESTROOM FLOOR
CT-2	MANUFACTURER	MOSA
	STYLE NAME/NO.	BLEND
	COLOR NAME/NO.	BRIGHT WHITE / 30510
	TILE SIZE	15CM X 30CM (6"X12")
	REMARKS	GLOSS
	GROUT	CUSTOM BUILDING PRODUCTS: #115 PLATINUM
	LOCATION	RESTROOM WALLS; STOP TILE AT 7'-0" AFF, TYP.
CT-3	MANUFACTURER	MOSA
	STYLE NAME/NO.	BLEND
	COLOR NAME/NO.	AIR BLUE / 32120
	TILE SIZE	15CM X 30CM (6"X12")
	FINISH	STONEMATT
	GROUT	CUSTOM BUILDING PRODUCTS: #115 PLATINUM
	LOCATION	RESTROOM WALL ACCENT; STOP TILE AT 7'-0" AFF, TYP.

SHEET LINOLEUM

SL-1	MANUFACTURER	FORBO
	TYPE	MCS
	COLOR	3139 LAVA
	SIZE	ROLL GOODS (79" WIDE)
	WELDING ROD	USE SOLID TO MATCHING
	LOCATION	MECHANICAL ROOM

RESILIENT BASE

RB-1	MANUFACTURER	JOHNSONITE
	TYPE	STRAIGHT BASE
	COLOR	20 CHARCOAL WG
	SIZE	4"
	REMARKS	
	LOCATION	REFER TO FINISH SCHEDULE

PAINT

PT-1	MANUFACTURER	SHERWIN WILLIAMS
	COLOR NO.	SW 7100
	NAME	ARCADE WHITE
	REMARKS	EGGSHELL
	LOCATION	REFER TO FINISH SCHEDULE
PT-2	MANUFACTURER	SHERWIN WILLIAMS
	COLOR NO.	SW 6866
	NAME	HEARTTHROB
	REMARKS	EGGSHELL
	LOCATION	REFER TO FINISH SCHEDULE

PLASTIC LAMINATE

PL-1	MANUFACTURER	FORMICA
	NAME	NEW WHITE COLORCORE2
	NUMBER	7223C-90 (GLOSS FINISH)
	EDGE BAND	MATCHING GLOSS FINISH
	REMARKS	
	LOCATION	OVERHEAD CABINETS
PL-2	MANUFACTURER	NEVAMAR
	NAME	INDIGO ThruColor
	NUMBER	NV150102-G (GLOSS FINISH)
	EDGE BAND	MATCHING GLOSS FINISH
	REMARKS	NOT AN IN-STOCK ITEM. CONFIRM LEAD TIME
	LOCATION	BASE CABINETS
PL-3	MANUFACTURER	FORMICA
	NAME	CLEMENTINE
	NUMBER	2962-90 (GLOSS FINISH)
	EDGE BAND	MATCHING GLOSS EDGE BANDING
	REMARKS	
	LOCATION	LOCKERS
PL-4	MANUFACTURER	FORMICA
	NAME	CARDBOARD SOLIDZ
	NUMBER	7813-58
	REMARKS	MATTE FINISH
	LOCATION	COUNTERTOPS, REFER TO FINISH SCHEDULE

SOLID SURFACE

SS-1	MANUFACTURER	GEOS
	COLOR	AVALON
	REMARKS	3 cm
	LOCATION	RESTROOMS AND BREAK ROOM
SS-2	MANUFACTURER	ECO BY COSENTINO
	COLOR	POLAR CAP
	REMARKS	3 cm
	LOCATION	TICKET COUNTER

ACOUSTICAL CEILING TILE

ACT-1	MANUFACTURER	ARMSTRONG
	SERIES	ULTIMA
	NUMBER	1942HRC
	SIZE	24" x 24" x 3/4"
	COLOR	WHITE
	GRID	9/16" SUPRAFINE - BLIZZARD WHITE
	REMARKS	
	LOCATION	REFER TO FINISH SCHEDULE AND REFLECTED CEILING PANS FOR TRANSITIONS

Greenville
NORTH CAROLINA

JACOBS

333 Fayetteville Street, Suite 1100
Raleigh, NC 27601
PH: 919-334-3100 FX: 919-334-3122 www.jacobs.com
North Carolina Engineering Firm License No. F-287
North Carolina Architectural Firm Reg. No. 50757

AYERS SAINT GROSS

Consultants:

ARK Consulting Group, PLLC

Coaly Design
Landscape Architecture + Land Planning

Seals:

JOHN A. STEVERMER
REGISTERED ARCHITECT
5858
NORTH CAROLINA
05-09-16
DURHAM, N.C.

JOHN A. STEVERMER, NC LICENSE NO. 5858

General Notes:

Project Client:
CITY OF GREENVILLE

GREENVILLE TRANSPORTATION ACTIVITY CENTER
600 S. Pitt Street, Greenville, NC

Number	Description	Date
0	IFC	05-10-2016

Key Plan: Project North

CAD File:
Project No.: L3005900
Copyright: 2015 Jacobs Engineering Group

Drawing Sheet Title:
FINISH LEGEND & SCHEDULE

Drawing Sheet Number:
A-520

Owner's Drawing Sheet No.:

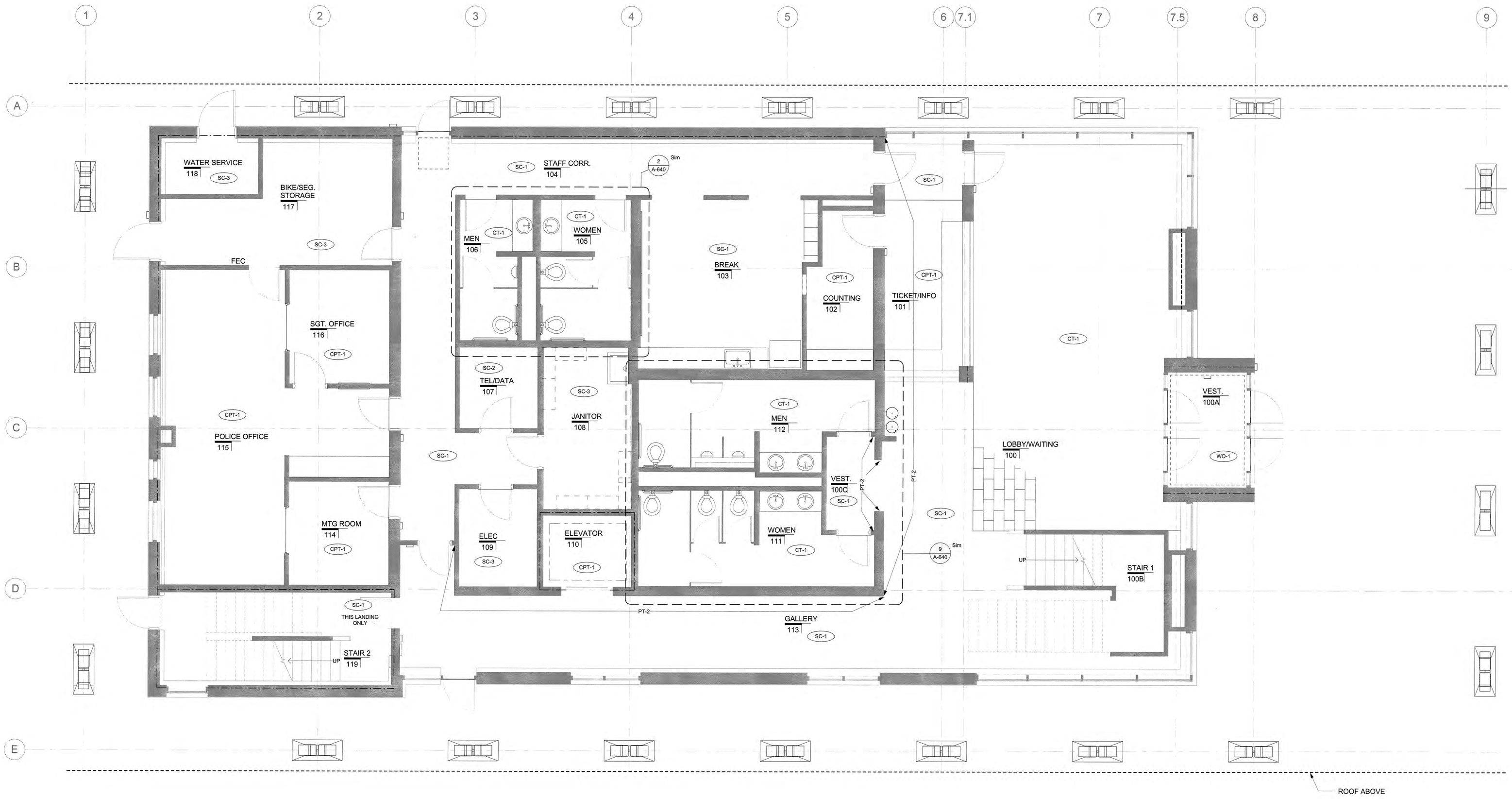

1 FIRST FLOOR FINISH PLAN
A-521 SCALE: 1/4" = 1'-0"

Greenville
NORTH CAROLINA

JACOBS
333 Fayetteville Street, Suite 1100
Raleigh, NC 27601
PH: 919-334-3100 FX: 919-334-3122 www.jacobs.com
North Carolina Engineering Firm License No. F-267
North Carolina Architectural Firm Reg. No. 50757

AYERS SAINT GROSS

Consultants:
ARK Consulting Group, PLLC
Coaly Design
Landscape Architecture + Land Planning

Seals:

JOHN A. STEVERMER, NC LICENSE NO. 5858

General Notes:

Project Client:
CITY OF GREENVILLE

GREENVILLE TRANSPORTATION ACTIVITY CENTER
600 S. Pitt Street, Greenville, NC

Number	Description	Date
0	IFC	05-10-2016

Key Plan:

Project North

CAD File:
Project No.: L3005900
Copyright: 2015 Jacobs Engineering Group

Drawing Sheet Title:
FIRST FLOOR FINISH PLAN

Drawing Sheet Number:
A-521

Owner's Drawing Sheet No.:

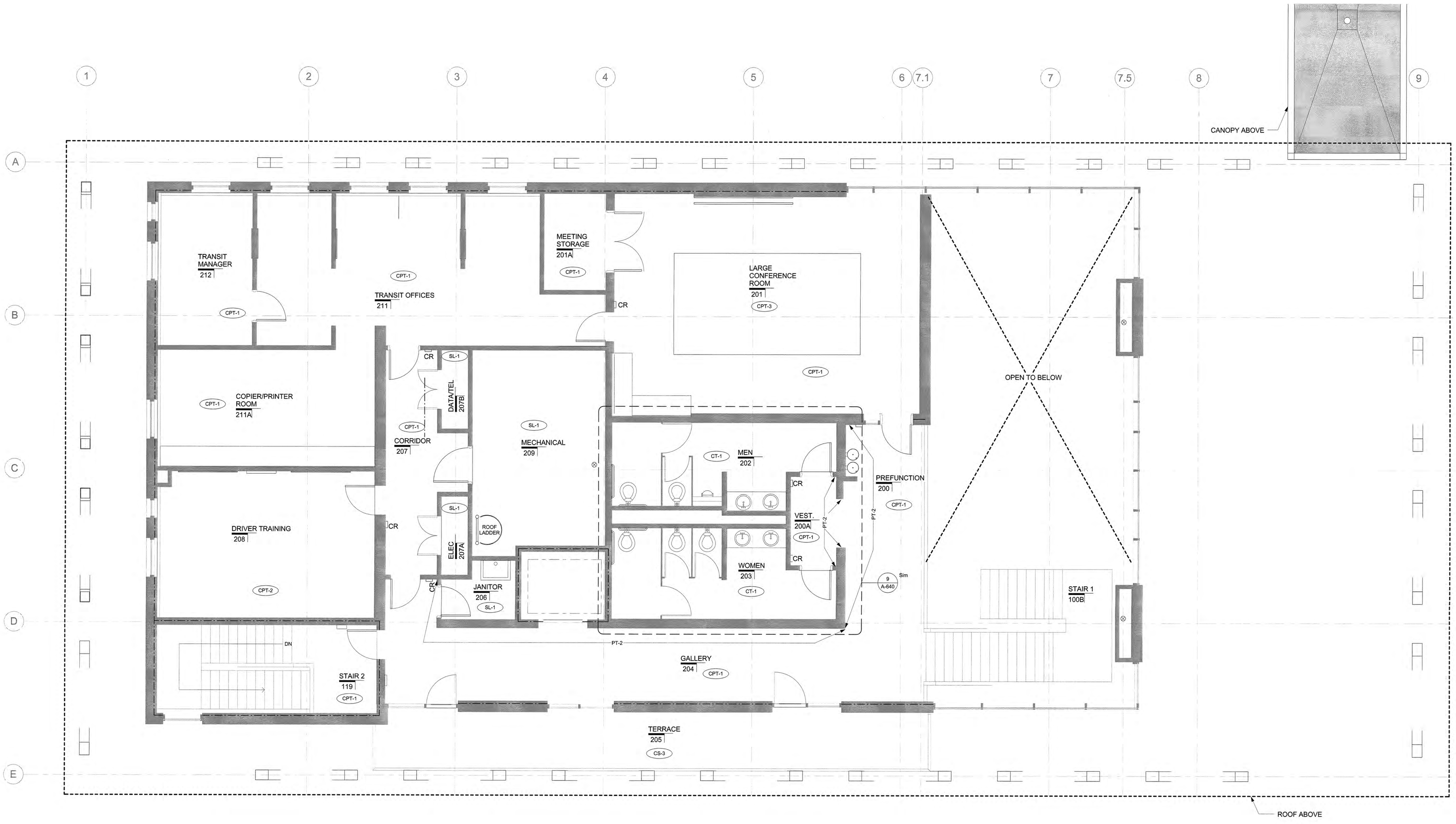

1 SECOND FLOOR FINISH PLAN
A-522 SCALE: 1/4" = 1'-0"

Greenville
NORTH CAROLINA

JACOBS
333 Fayetteville Street, Suite 1100
Raleigh, NC 27601
PH: 919-334-3100 FX: 919-334-3122 www.jacobs.com
North Carolina Engineering Firm License No. F-267
North Carolina Architectural Firm Reg. No. 50757

AYERS SAINT GROSS

Consultants:
ARK Consulting Group, PLLC

Coaly Design
Landscape Architecture + Land Planning

Seals:

JOHN A. STEVERMER, NC LICENSE NO. 5858

General Notes:

Project Client:
CITY OF GREENVILLE

GREENVILLE TRANSPORTATION ACTIVITY CENTER
600 S. Pitt Street, Greenville, NC

Number	Description	Date
0	IFC	05-10-2016

Key Plan:

Project North

CAD File:
Project No.: L3005900
Copyright: 2015 Jacobs Engineering Group

Drawing Sheet Title:
SECOND FLOOR FINISH PLAN

Drawing Sheet Number:
A-522

Owner's Drawing Sheet No.:

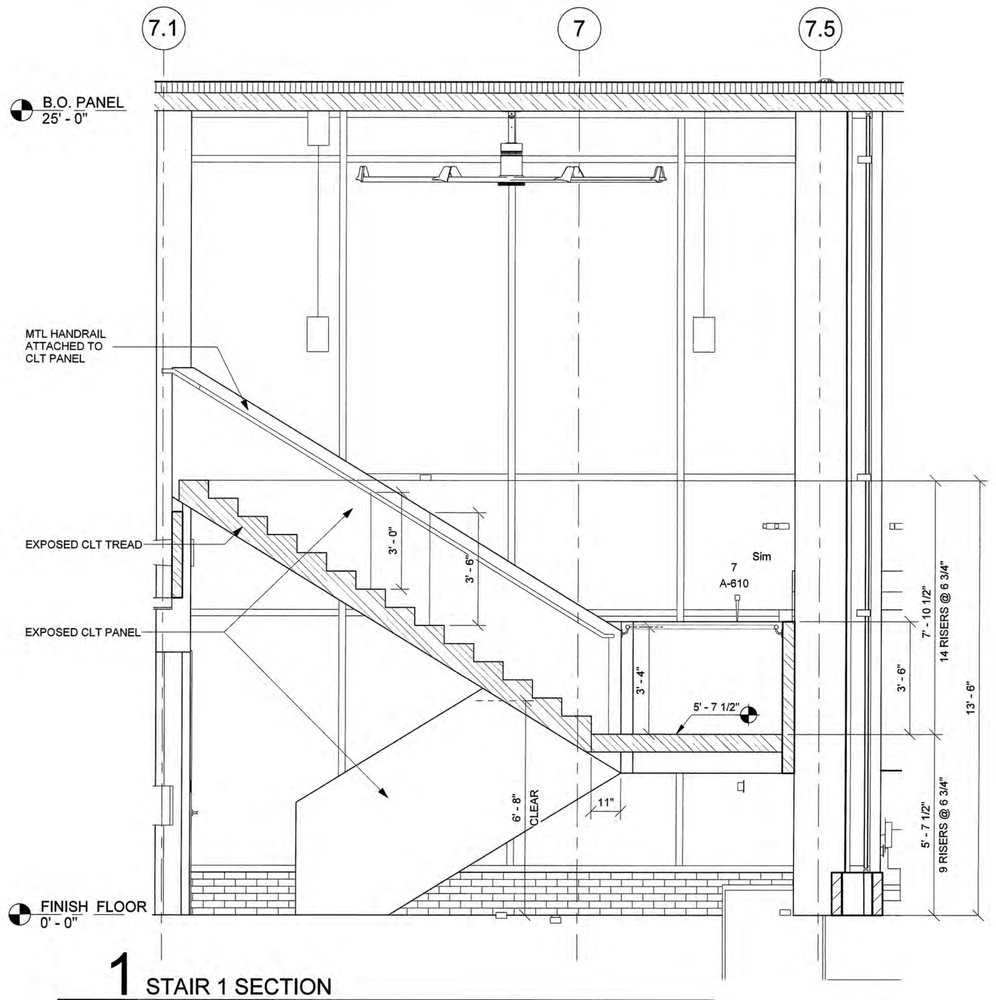

1 STAIR 1 SECTION
A-610 SCALE: 3/8" = 1'-0"

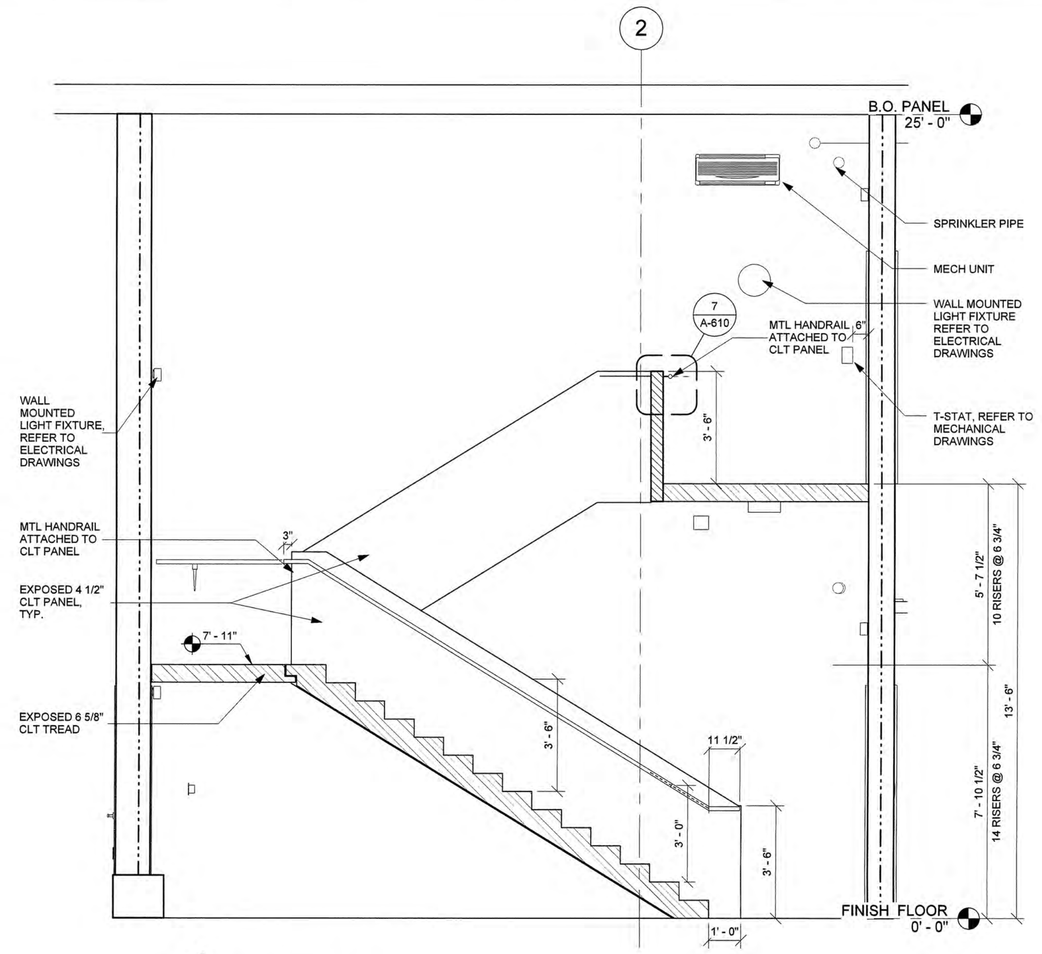

4 STAIR 2 SECTION
A-610 SCALE: 3/8" = 1'-0"

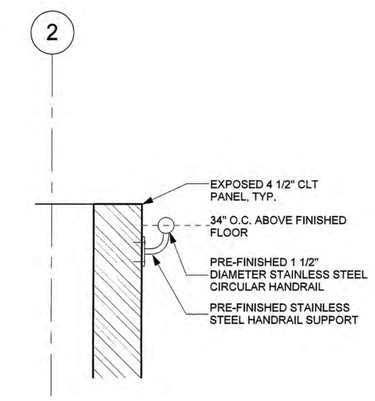

7 HANDRAIL SECTION DETAIL
A-610 SCALE: 1 1/2" = 1'-0"

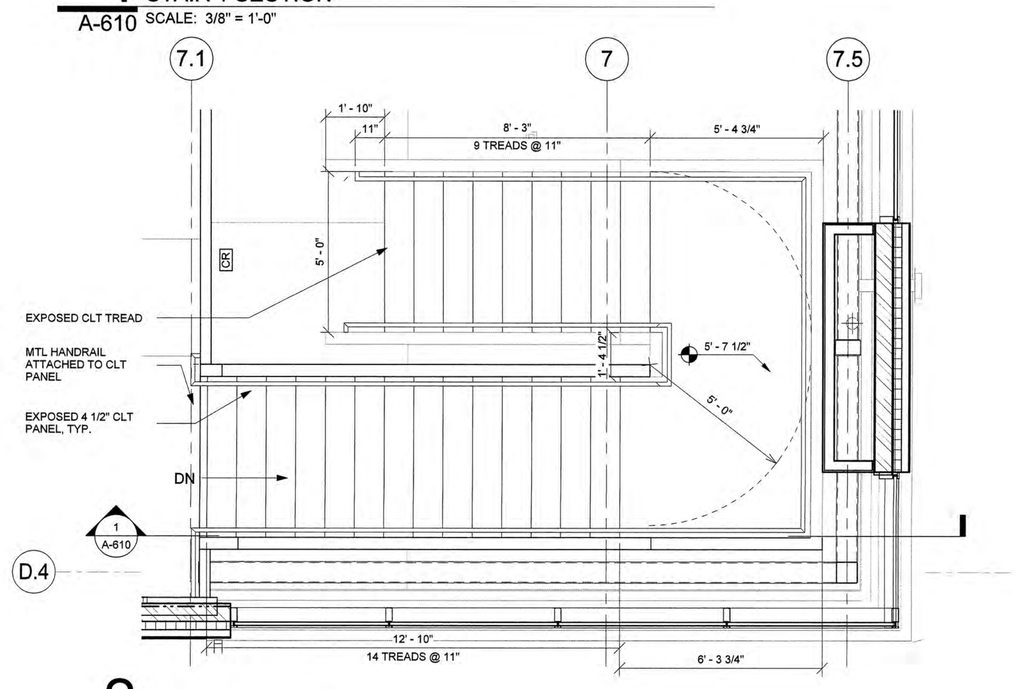

2 STAIR 1 - LEVEL 2
A-610 SCALE: 3/8" = 1'-0"

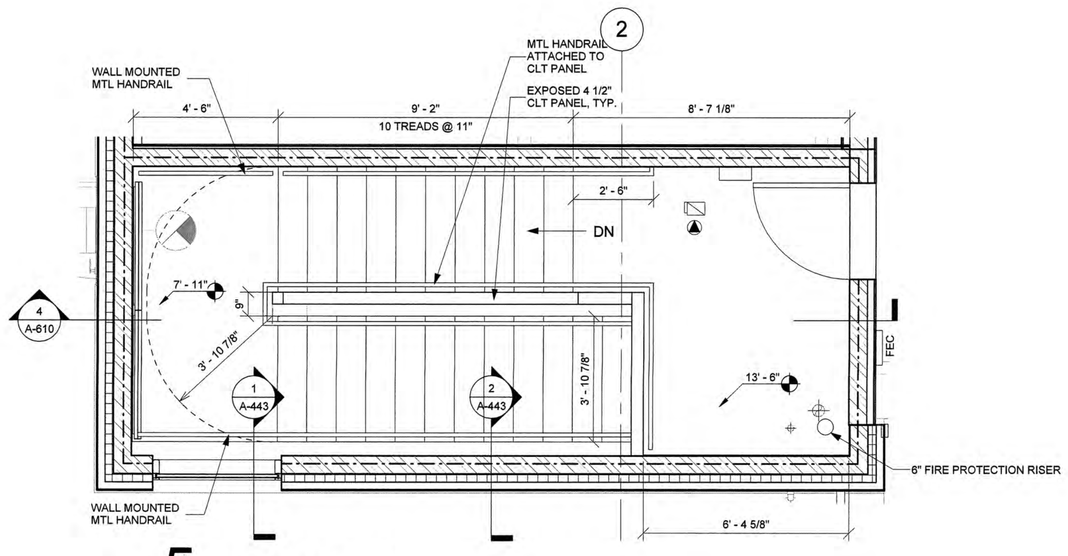

5 STAIR 2 - LEVEL 2
A-610 SCALE: 3/8" = 1'-0"

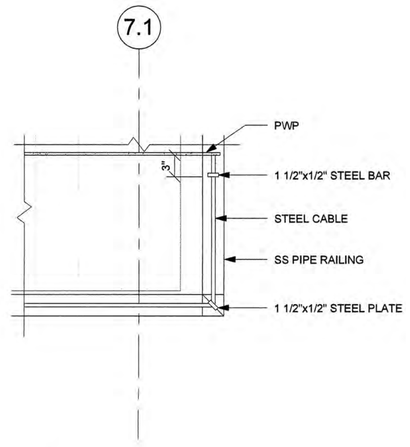

8 GUARD RAIL CORNER
A-610 SCALE: 1" = 1'-0"

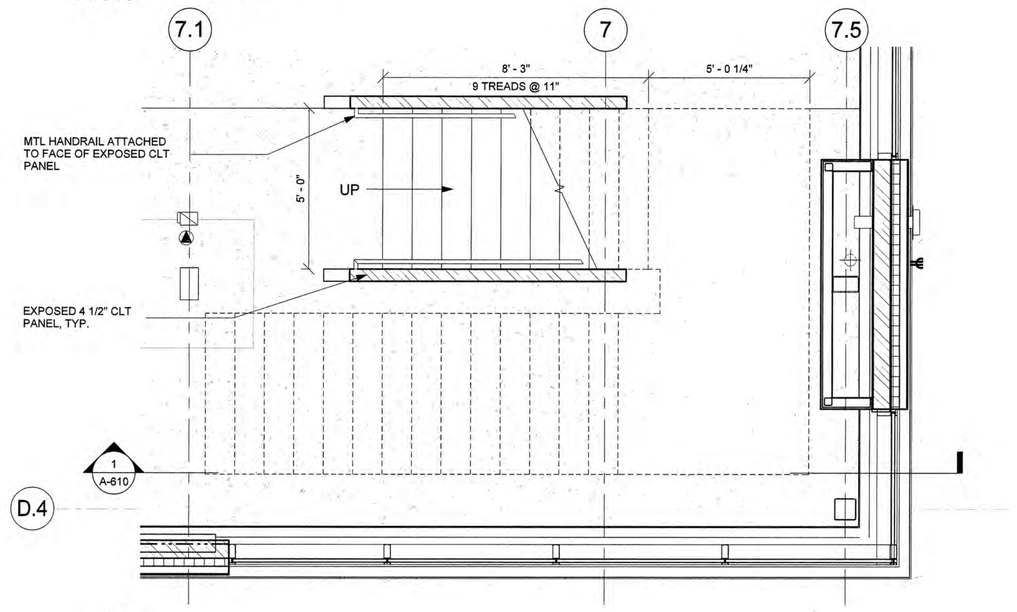

3 STAIR 1 - LEVEL 1
A-610 SCALE: 3/8" = 1'-0"

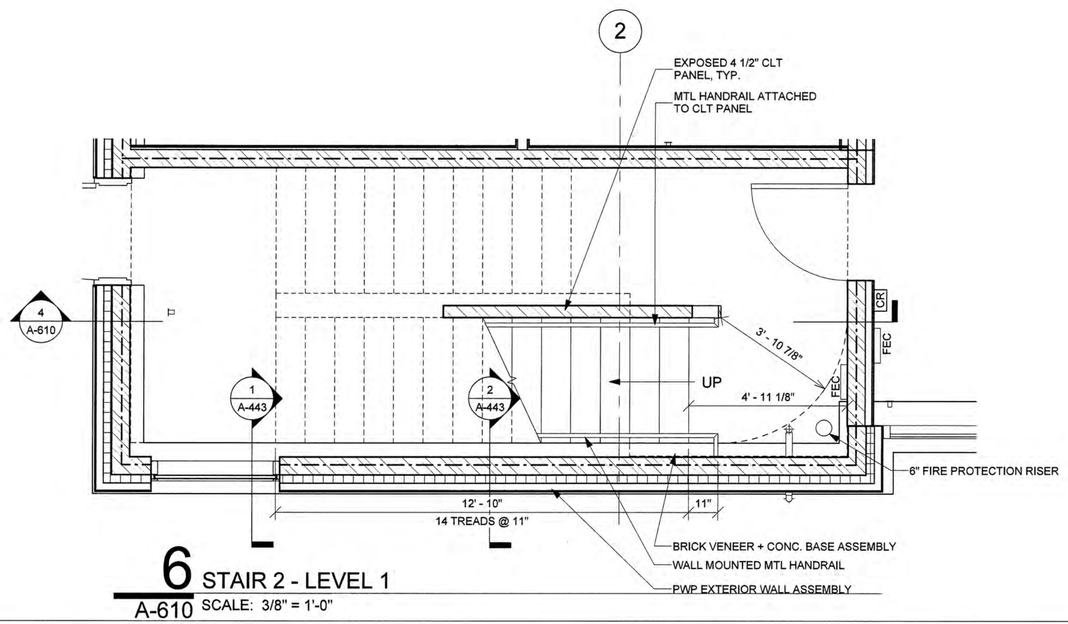

6 STAIR 2 - LEVEL 1
A-610 SCALE: 3/8" = 1'-0"

GENERAL NOTES:

1. ALL DIMENSIONS ARE TO FACE OF CLT OR STUD, U.O.N.

2. 'CLEAR' DIMENSIONS ARE TO FACE OF FINISH

2. ALL FIRE RATED WALLS TO BE CONTINUOUS FROM STRUCTURAL FLOOR TO STRUCTURAL FLOOR OR ROOF DECK ABOVE, OR AS INDICATED.

3. COORDINATE WITH SITE DOCUMENTS FOR SITE ELEMENTS.

4. REFER TO ENLARGED ELEVATIONS SHEETS IN A-400 SERIES FOR DIMENSIONAL LOCATIONS OF GLAZED DOORS AND OPENINGS WITHIN GLAZING SYSTEMS.

5. MAINTAIN REQUIRED ACOUSTICAL RATINGS WHEREVER PARTITIONS PENETRATING FINISHED CEILING ARE PIERCED BY ITEMS SUCH AS CABLE TRAY, CONDUIT, DUCTS, PIPES, OR STEEL.

6. CONCEALED BLOCKING IN PARTITIONS TO BE PROVIDED WHERE REQUIRED. THESE AREAS TO INCLUDE, BUT ARE NOT LIMITED TO, OPENED AND CLOSED SHELVING, COAT RODS AND SHELVES, CABINETRY, COUNTERS, DOOR FRAMES AND HEADERS, AND SUPPORT OF TRIM. ALSO COORDINATE BLOCKING AS REQUIRED FOR SECURITY, AUDIO VISUAL, TELECOM, PAGING LOCATIONS.

7. PROVIDE APPROVED FIRESTOPPING ASSEMBLY AT ALL SHAFT WALLS, FLOOR SLAB, AND EXTERIOR WALL PENETRATIONS AS REQUIRED. PENETRATIONS INCLUDE, BUT ARE NOT LIMITED TO, DUCTWORK, PIPEWAYS, CABLE TRAYS,AND CONDUIT RUNS.

8. WHERE SCHEDULED PARTITION TYPE IS TO BE FINISHED WITH CERAMIC TILE OR IS TO BE LOCATED IN WET APPLICATION AREA, OMIT GWB AND PROVIDE CEMENT BOARD TYPE PRODUCT.

9. ALL METAL STUD WALLS ARE D.G3.D, U.O.N.

Greenville
NORTH CAROLINA

JACOBS
333 Fayetteville Street, Suite 1100
Raleigh, NC 27601
PH: 919-334-3100 FX: 919-334-3122 www.jacobs.com
North Carolina Engineering Firm License No. F-287
North Carolina Architectural Firm Reg. No. 50757

AYERS SAINT GROSS

Consultants:
ARK Consulting Group, PLLC

Coaly Design
Landscape Architecture + Land Planning

Seals: 1-HR FIRE RATED WALL LINE

JOHN A. STEVERMER, NC LICENSE NO. 5858

General Notes:

Project Client:
CITY OF GREENVILLE

GREENVILLE TRANSPORTATION ACTIVITY CENTER
600 S. Pitt Street, Greenville, NC

Number	Description	Date
0	IFC	05-10-2016

Key Plan: Project North

CAD File:
Project No.: L3005900
Copyright: 2015 Jacobs Engineering Group

Drawing Sheet Title:
ENLARGED STAIR PLAN & SECTION

Drawing Sheet Number:
A-610

Owner's Drawing Sheet No.:

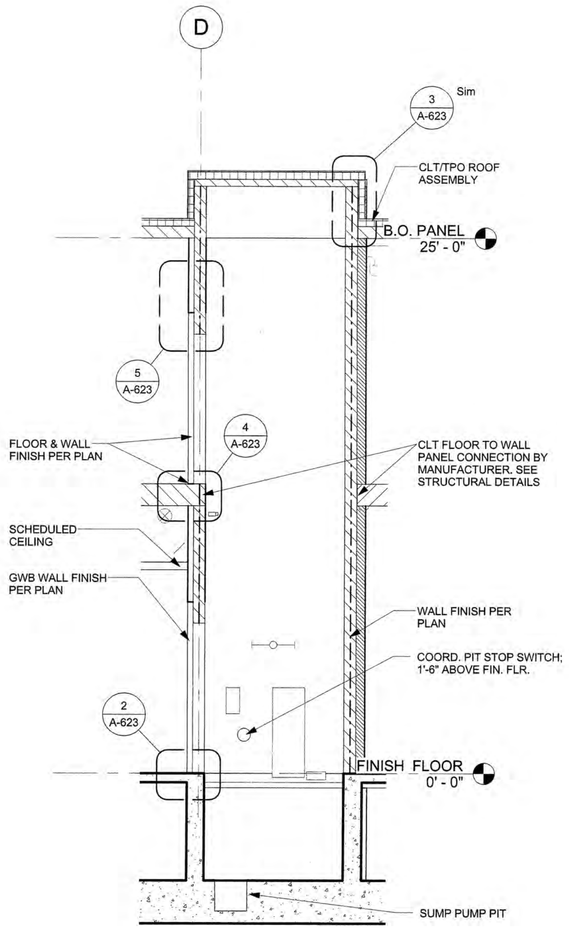

1 A-623 ELEVATOR SECTION
A-623 SCALE: 1/4" = 1'-0"

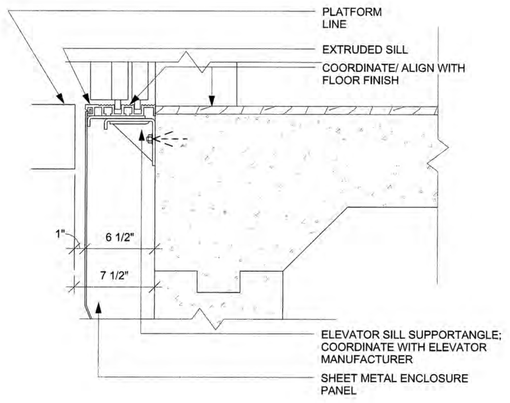

2 SECTION DETAIL - SILL AT GROUND FLOOR
A-623 SCALE: 1 1/2" = 1'-0"

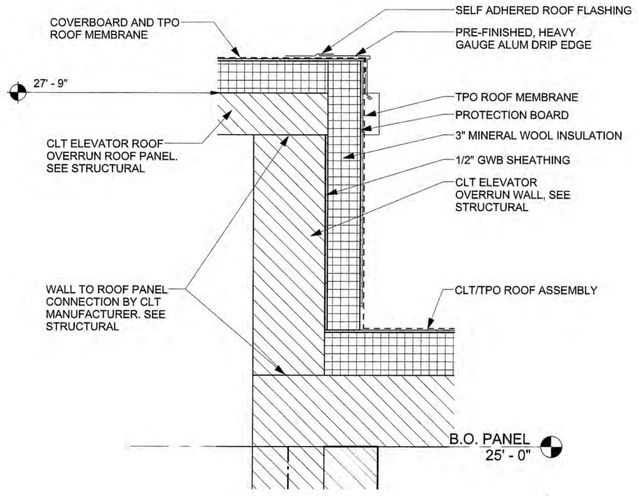

3 ELEVATOR DETAIL_2
A-623 SCALE: 1 1/2" = 1'-0"

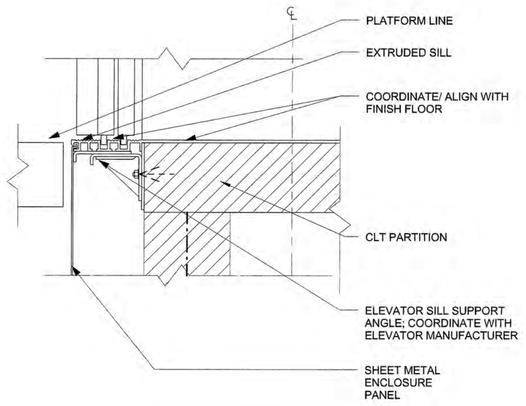

4 SECTION DETAIL - SILL AT INTERMEDIATE LEVEL
A-623 SCALE: 1 1/2" = 1'-0"

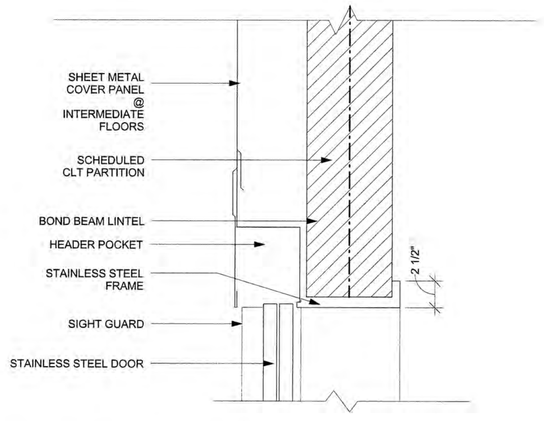

5 SECTION DETAIL - HEAD
A-623 SCALE: 1 1/2" = 1'-0"

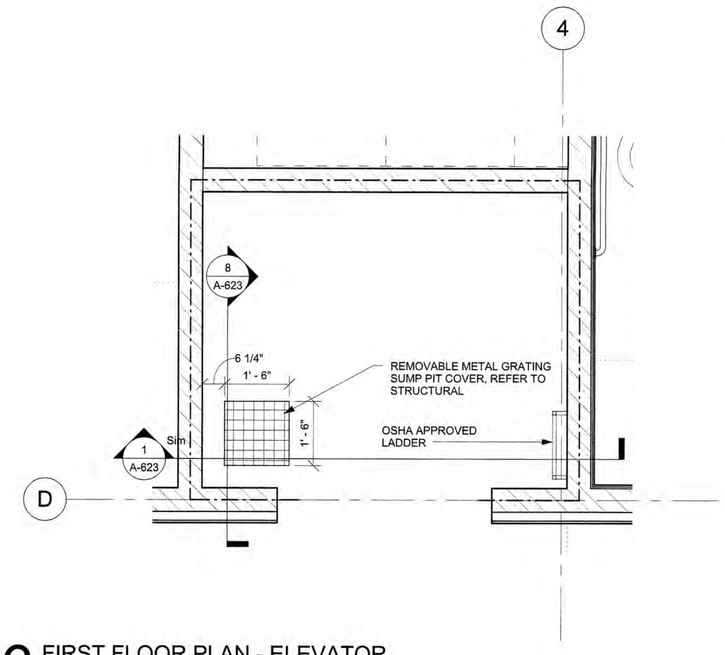

6 FIRST FLOOR PLAN - ELEVATOR PIT
A-623 SCALE: 1/2" = 1'-0"

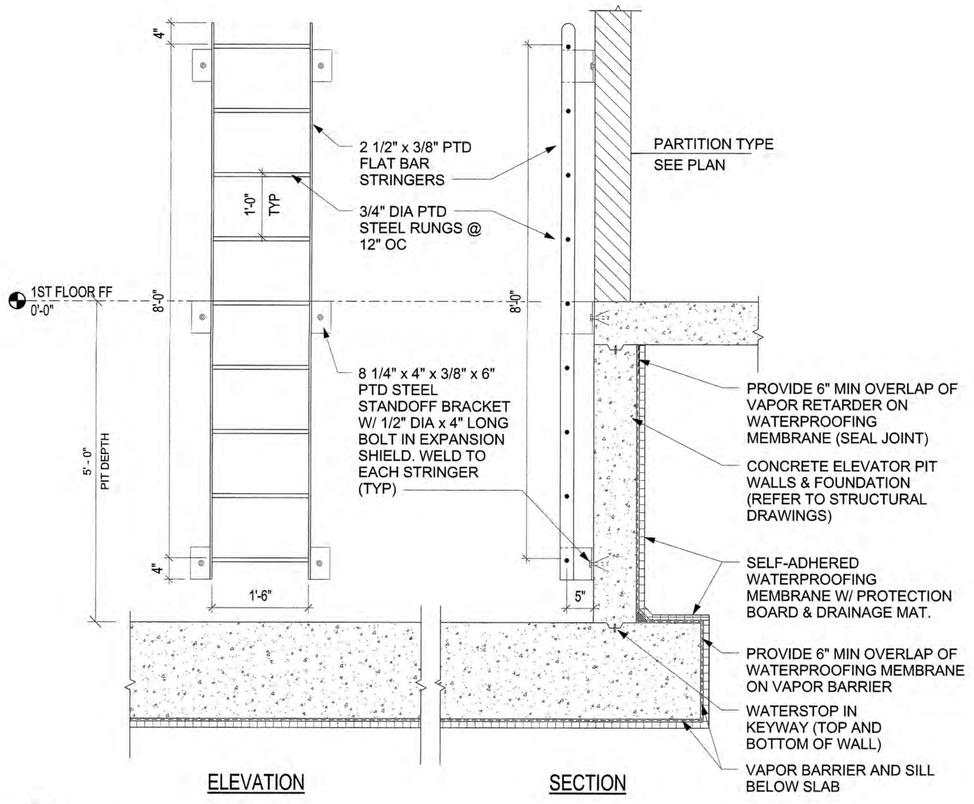

7 ELEVATOR PIT LADDER
A-623 SCALE: 3/4" = 1'-0"

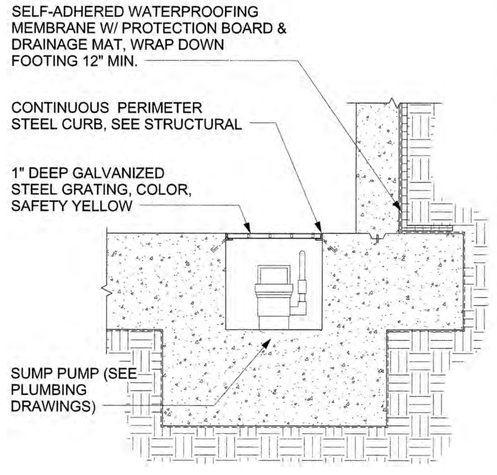

8 ELEVATOR SUMP PIT
A-623 SCALE: 3/4" = 1'-0"

Greenville
NORTH CAROLINA

JACOBS
333 Fayetteville Street, Suite 1100
Raleigh, NC 27601
PH: 919-334-3100 FX: 919-334-3122 www.jacobs.com
North Carolina Engineering Firm License No. F-287
North Carolina Architectural Firm Reg. No. 50757

AYERS SAINT GROSS

Consultants:
ARK Consulting Group, PLLC

Coaly Design
Landscape Architecture + Land Planning

Seals:

JOHN A. STEVERMER, NC LICENSE NO. 5858

General Notes:

Project Client:
CITY OF GREENVILLE

GREENVILLE TRANSPORTATION ACTIVITY CENTER
600 S. Pitt Street, Greenville, NC

Number	Description	Date
0	IFC	05-10-2016

Key Plan: Project North

CAD File:
Project No.: L3005900
Copyright: 2015 Jacobs Engineering Group

Drawing Sheet Title:
ELEVATOR DETAILS

Drawing Sheet Number:
A-623

Owner's Drawing Sheet No.:

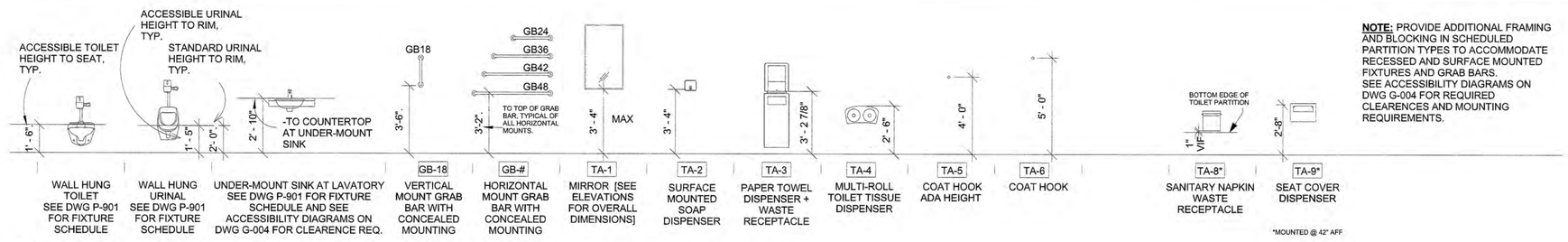

NOTE: PROVIDE ADDITIONAL FRAMING AND BLOCKING IN SCHEDULED PARTITION TYPES TO ACCOMMODATE RECESSED AND SURFACE MOUNTED FIXTURES AND GRAB BARS. SEE ACCESSIBILITY DIAGRAMS ON DWG G-004 FOR REQUIRED CLEARENCES AND MOUNTING REQUIREMENTS.

TYP. ACCESSORY MOUNTING HEIGHTS

A-640 SCALE: 1/4" = 1'-0"

1 - SURFACE MTD
2 - RECESSED

TAG	DESCRIPTION		MANUFACTURER	PRODUCT NO.	FINISH	REMARKS
TA-1	AUTOMATIC HAND DRYER	1	DYSON	AIRBLADE AB-14	WHITE	LOCATED IN TOILET ROOMS 111 & 112 IN LIEU OF TA-3
TA-2	SOAP DISPENSER	1	BOBRICK	B-2013	STAINLESS STL	
TA-3	PAPER TOWEL DISPENSER & WASTE RECEPTACLE	2	BOBRICK	B-3942	STAINLESS STL	LOCATED IN TOILET ROOMS 105, 106, 202 & 203 IN LIEU OF TA-1
TA-4	TOILET TISSUE DISPENSER	1	BOBRICK	B-2888	STAINLESS STL	LOCATED IN TOILET ROOMS 105, 106, 202 & 203 IN LIEU OF TA-7
TA-5,6	COAT HOOK	1	ROCKWOOD	720	STAINLESS STL	
TA-7	TOILET TISSUE DISPENSER	1	BOBRICK	B-2892	STAINLESS STL	LOCATED IN TOILET ROOMS 111 & 112 IN LIEU OF TA-4
TA-8	SANITARY NAPKIN RECEPTACLE	1	BOBRICK	B-254	STAINLESS STL	
TA-9	SEAT COVER DISPENSER	1	BOBRICK	B-221	STAINLESS STL	
TA-10	TOILET PARTITIONS	1	REFER TO SPEC	REFER TO SPEC	REFER TO SPEC	
TA-11	URINAL SCREEN	1	REFER TO SPEC	REFER TO SPEC	REFER TO SPEC	

TOILET ACCESSORY SCHEDULE

A-640 SCALE: 1/2" = 1'-0"

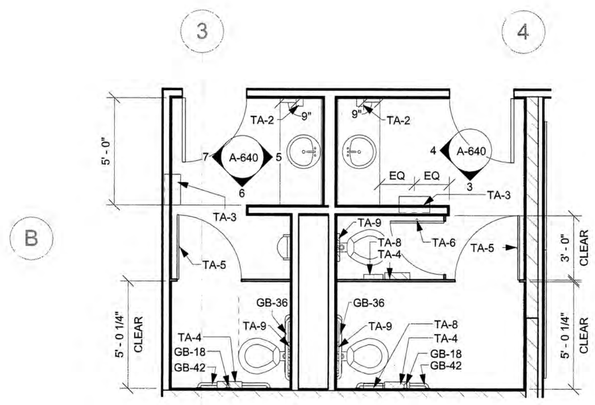

1 TOILET ACCESSORY PLAN_STAFF

A-640 SCALE: 1/4" = 1'-0"

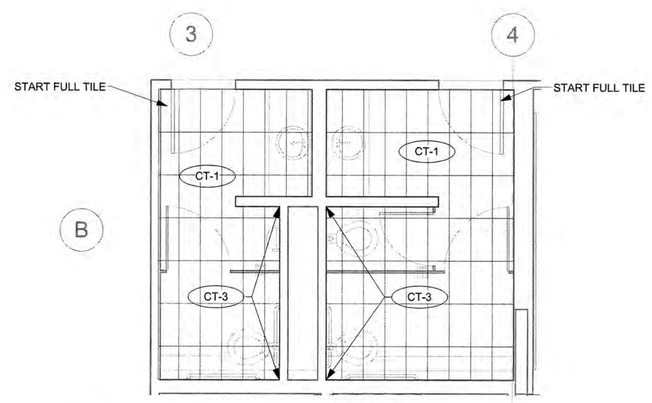

2 TOILET FINISH PLAN_STAFF

A-640 SCALE: 1/4" = 1'-0"

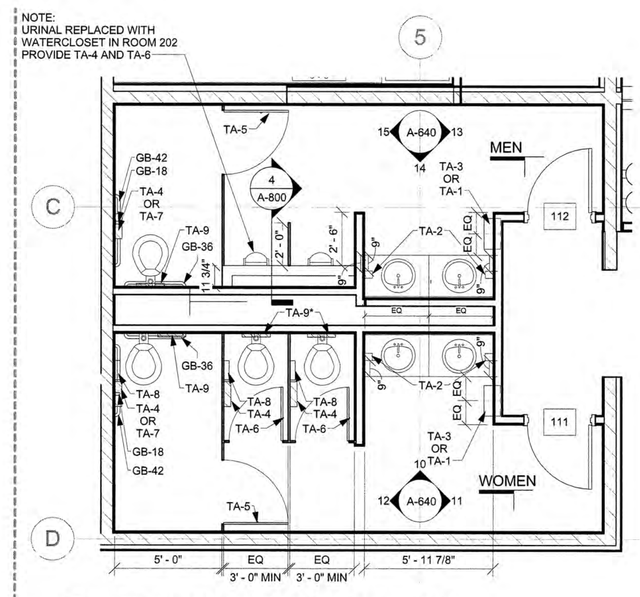

8 TOILET ACCESSORY PLAN - RMS 111/112/202/203

A-640 SCALE: 1/4" = 1'-0"

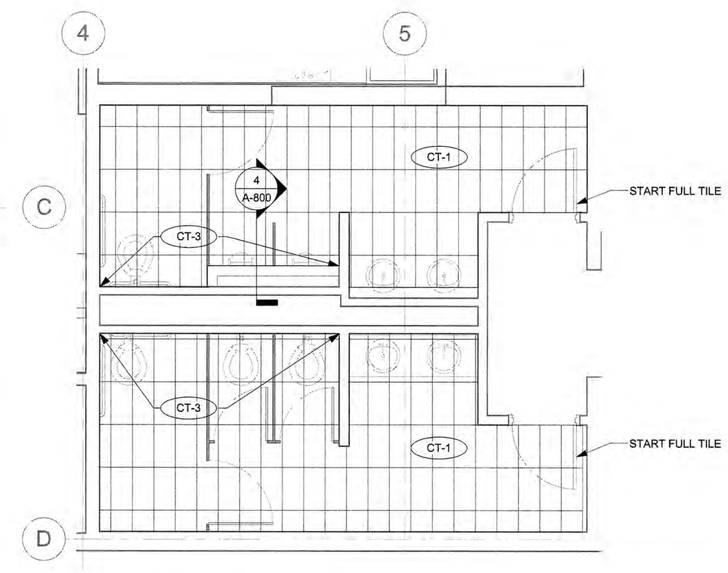

9 TOILET FINISH PLAN - RMS 111/112/202/203

A-640 SCALE: 1/4" = 1'-0"

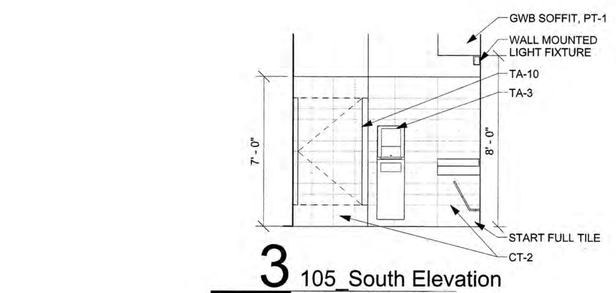

3 105_South Elevation

A-640 SCALE: 1/4" = 1'-0"

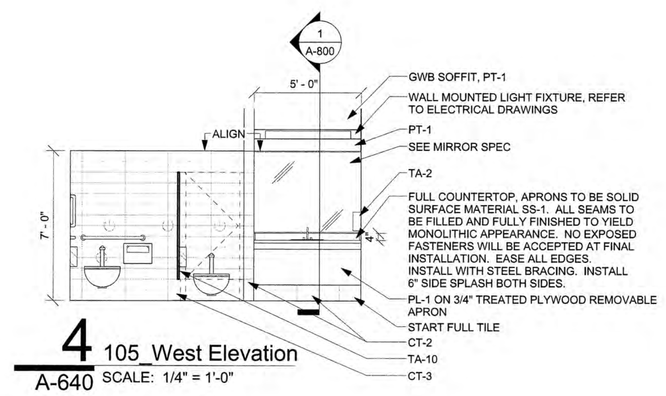

4 105_West Elevation

A-640 SCALE: 1/4" = 1'-0"

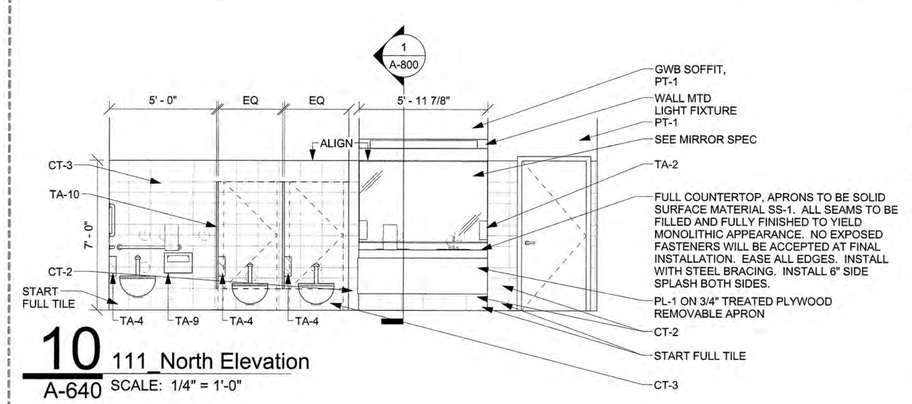

10 111_North Elevation

A-640 SCALE: 1/4" = 1'-0"

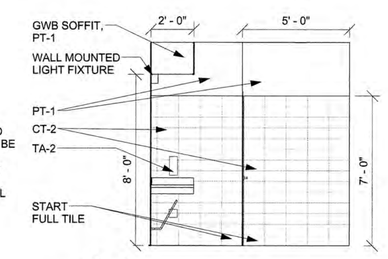

11 111_East Elevation

A-640 SCALE: 1/4" = 1'-0"

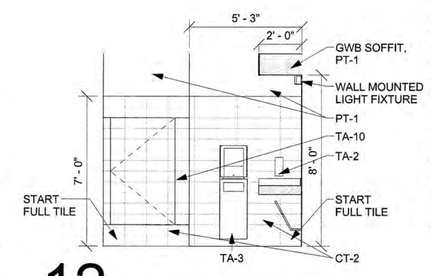

12 111_West Elevation

A-640 SCALE: 1/4" = 1'-0"

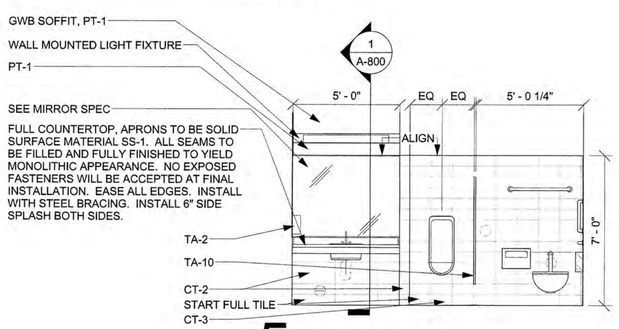

5 106_West Elevation

A-640 SCALE: 1/4" = 1'-0"

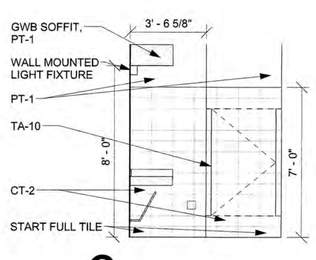

6 106_South Elevation

A-640 SCALE: 1/4" = 1'-0"

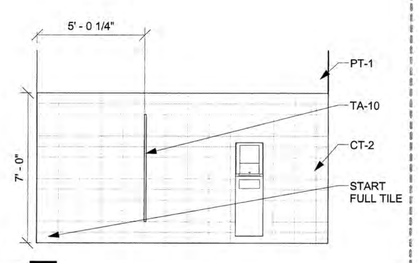

7 106_East Elevation

A-640 SCALE: 1/4" = 1'-0"

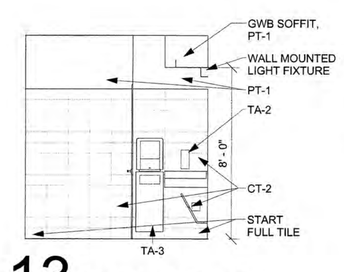

13 112_East Elevation

A-640 SCALE: 1/4" = 1'-0"

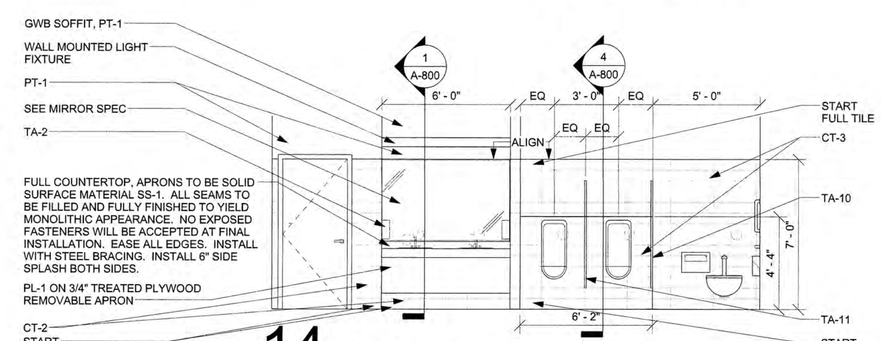

14 112_South Elevation

A-640 SCALE: 1/4" = 1'-0"

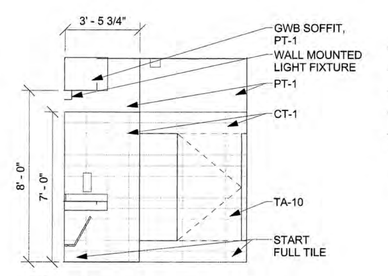

15 112_West Elevation

A-640 SCALE: 1/4" = 1'-0"

Greenville
NORTH CAROLINA

JACOBS

333 Fayetteville Street, Suite 1100
Raleigh, NC 27601
PH: 919-334-3100 FX: 919-334-3122 www.jacobs.com
North Carolina Engineering Firm License No. F-297
North Carolina Architectural Firm Reg. No. 50757

AYERS SAINT GROSS

Consultants:

ARK Consulting Group, PLLC

Coaly Design
Landscape Architecture + Land Planning

Seals:

JOHN A. STEVERMER, NC LICENSE NO. 5858

General Notes:

Project Client:
CITY OF GREENVILLE

GREENVILLE TRANSPORTATION ACTIVITY CENTER
600 S. Pitt Street, Greenville, NC

Number	Description	Date
0	IFC	05-10-2016

Key Plan: Project North

CAD File:
Project No.: L3005900
Copyright: 2015 Jacobs Engineering Group

Drawing Sheet Title:
TOILET ROOM PLANS

Drawing Sheet Number:
A-640

Owner's Drawing Sheet No.:

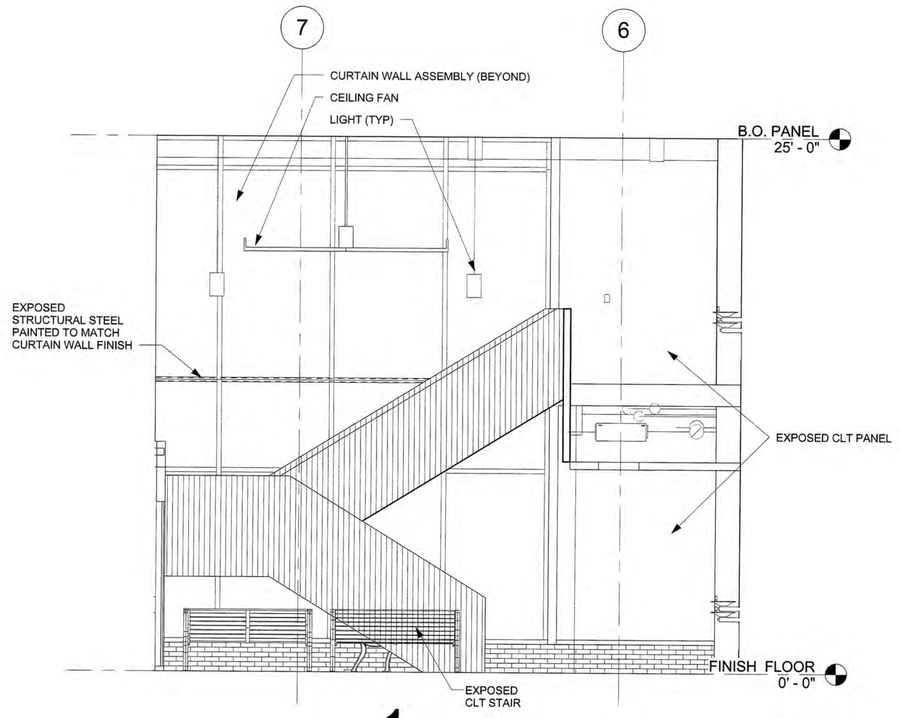

1 LOBBY STAIR - NORTH
A-700 SCALE: 1/4" = 1'-0"

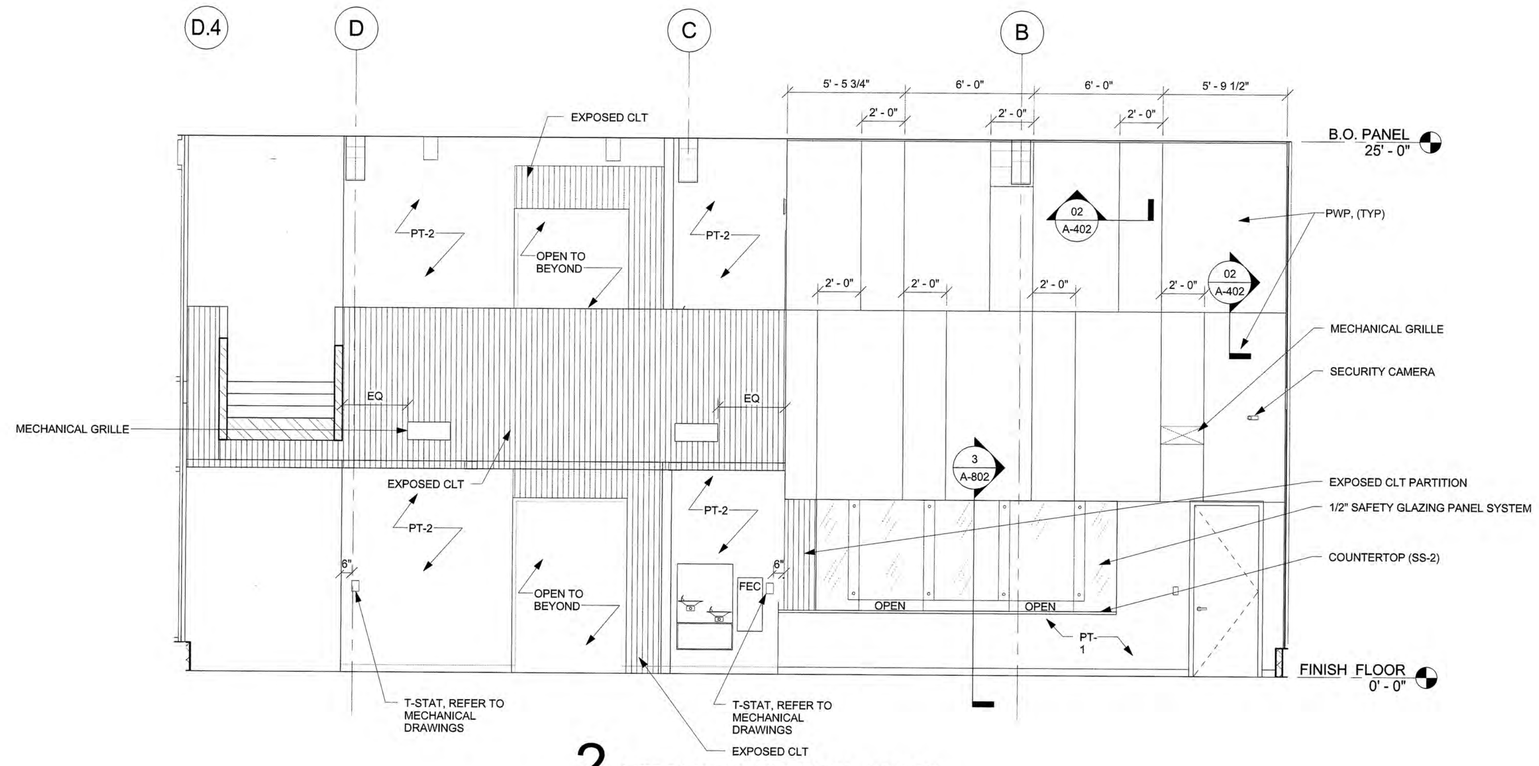

2 INTERIOR ELEVATION - LOBBY
A-700 SCALE: 1/4" = 1'-0"

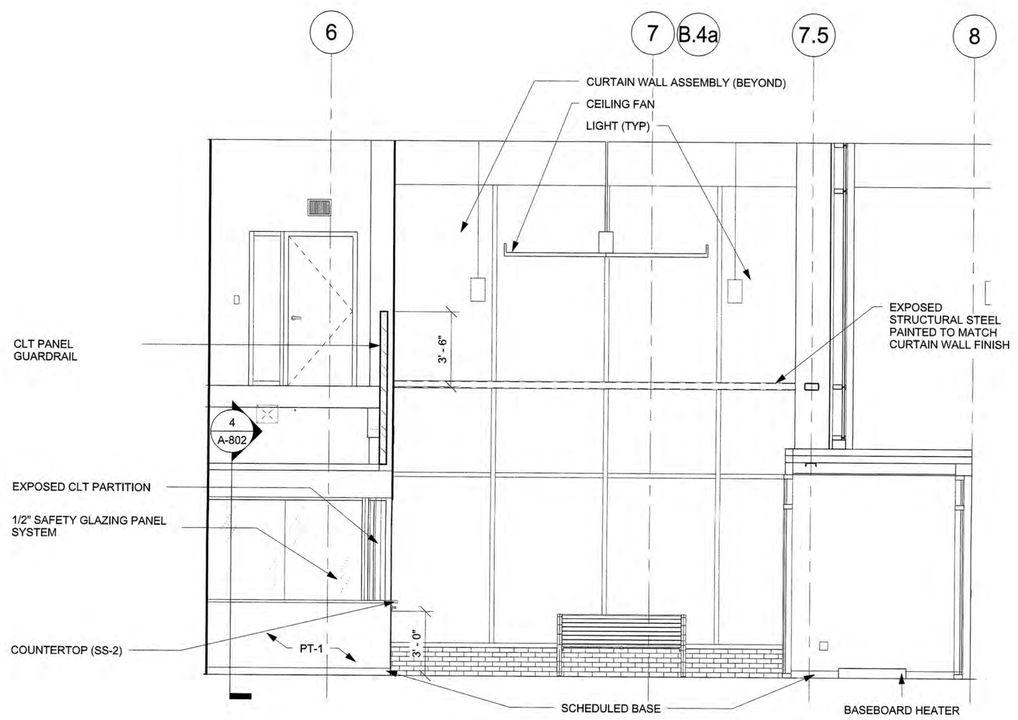

3 LOBBY_COUNTER
A-700 SCALE: 1/4" = 1'-0"

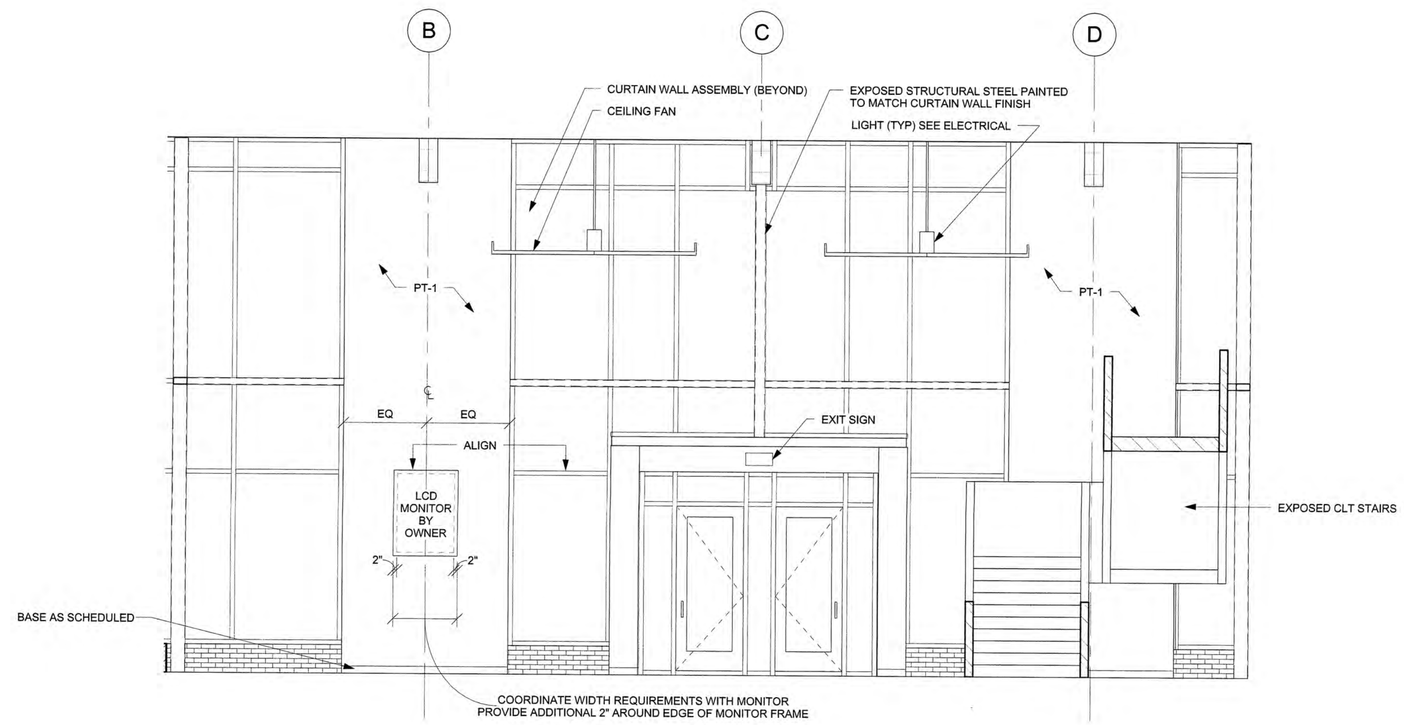

4 LOBBY_CURTAIN WALL
A-700 SCALE: 1/4" = 1'-0"

Greenville
NORTH CAROLINA

JACOBS
333 Fayetteville Street, Suite 1100
Raleigh, NC 27601
PH: 919-334-3100 FX: 919-334-3122 www.jacobs.com
North Carolina Engineering Firm License No. F-287
North Carolina Architectural Firm Reg. No. 50757

AYERS SAINT GROSS

Consultants:
ARK Consulting Group, PLLC

Coaly Design
Landscape Architecture + Land Planning

Seals:

JOHN A. STEVERMER
REGISTERED ARCHITECT
5858
05-09-16
NORTH CAROLINA
DURHAM, N.C.

JOHN A. STEVERMER, NC LICENSE NO. 5858

General Notes:

Project Client:
CITY OF GREENVILLE

GREENVILLE TRANSPORTATION ACTIVITY CENTER
600 S. Pitt Street, Greenville, NC

Number	Description	Date
0	IFC	05-10-2016

Key Plan: Project North

CAD File:
Project No.: L3005900
Copyright: 2015 Jacobs Engineering Group

Drawing Sheet Title:
INTERIOR ELEVATIONS
BUILDING LOBBY

Drawing Sheet Number:
A-700

Owner's Drawing Sheet No.:

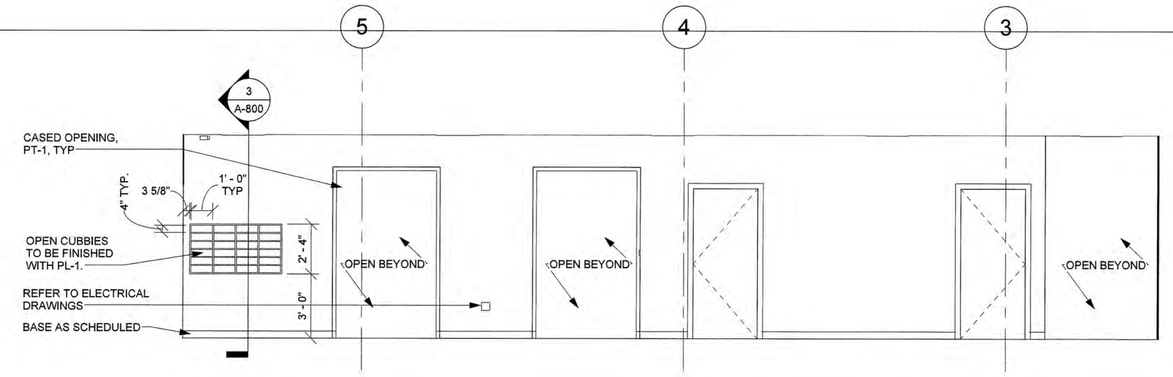

1 STAFF CORRIDOR - SOUTH ELEVATION
A-701 SCALE: 1/4" = 1'-0"

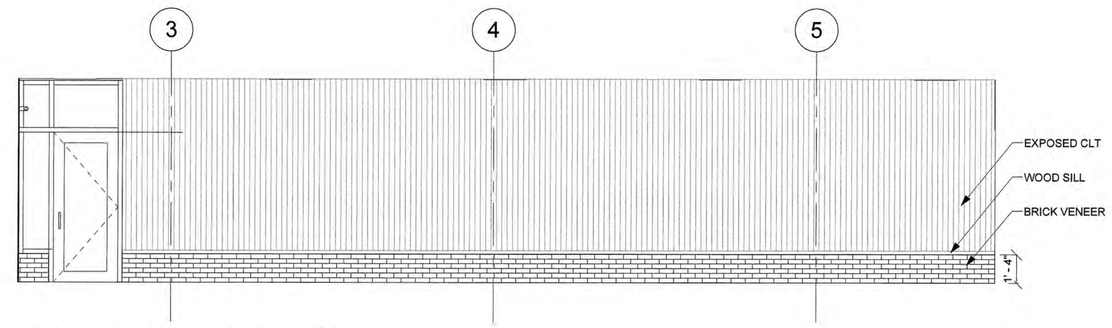

2 STAFF CORRIDOR - NORTH ELEVATION
A-701 SCALE: 1/4" = 1'-0"

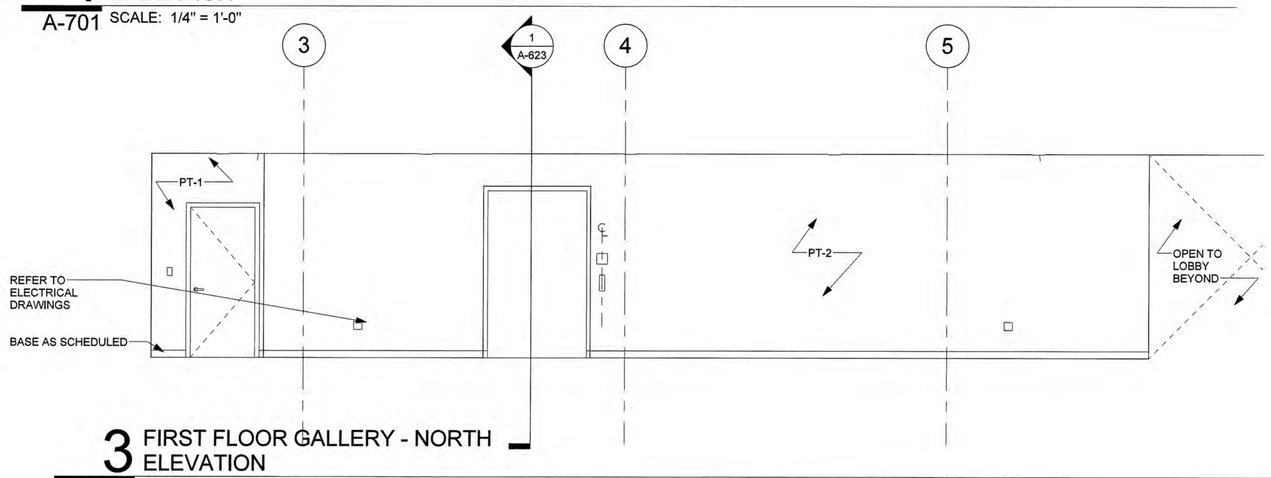

3 FIRST FLOOR GALLERY - NORTH ELEVATION
A-701 SCALE: 1/4" = 1'-0"

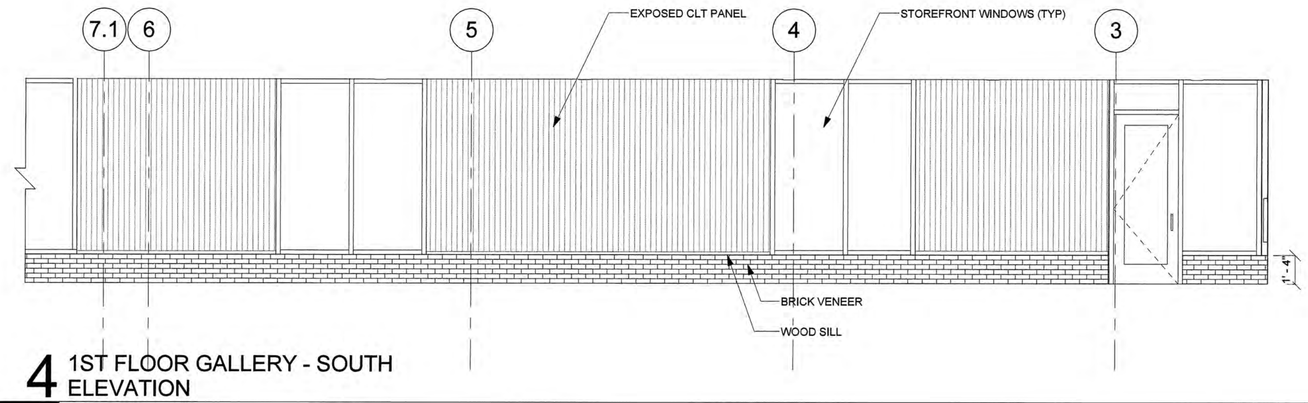

4 1ST FLOOR GALLERY - SOUTH ELEVATION
A-701 SCALE: 1/4" = 1'-0"

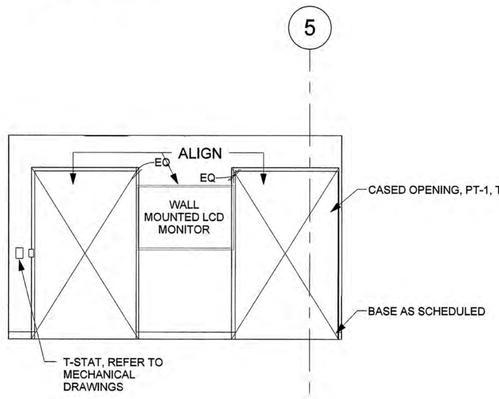

5 BREAK ROOM - NORTH ELEVATION
A-701 SCALE: 1/4" = 1'-0"

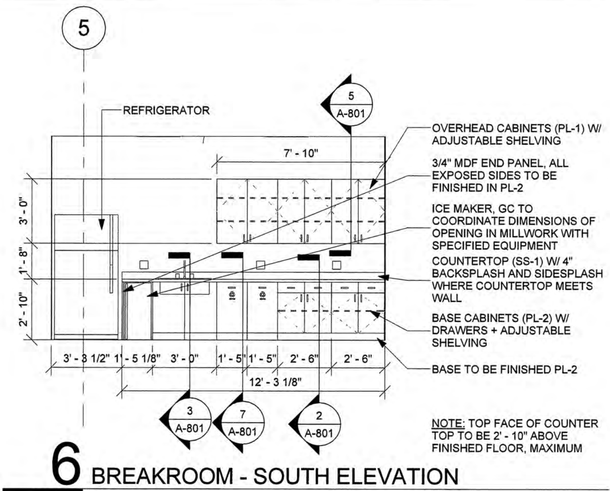

6 BREAKROOM - SOUTH ELEVATION
A-701 SCALE: 1/4" = 1'-0"

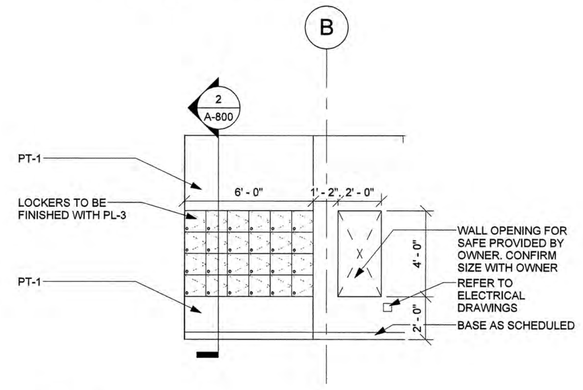

7 BREAKROOM - EAST ELEVATION
A-701 SCALE: 1/4" = 1'-0"

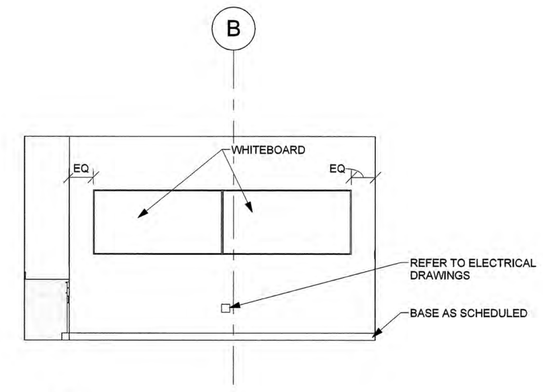

8 BREAK ROOM - WEST ELEVATION
A-701 SCALE: 1/4" = 1'-0"

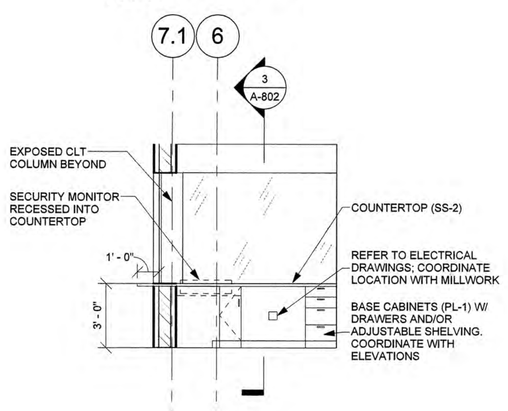

10 TICKET - SOUTH
A-701 SCALE: 1/4" = 1'-0"

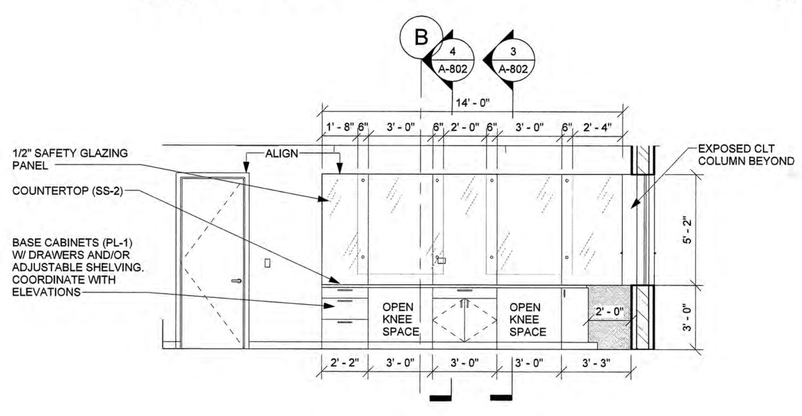

11 TICKET - EAST
A-701 SCALE: 1/4" = 1'-0"

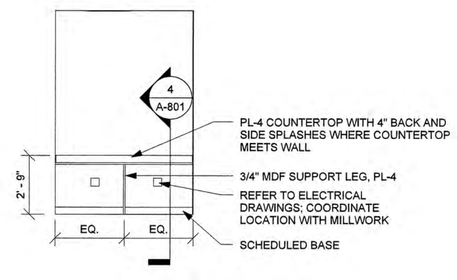

12 COUNTING ROOM - SOUTH
A-701 SCALE: 1/4" = 1'-0"

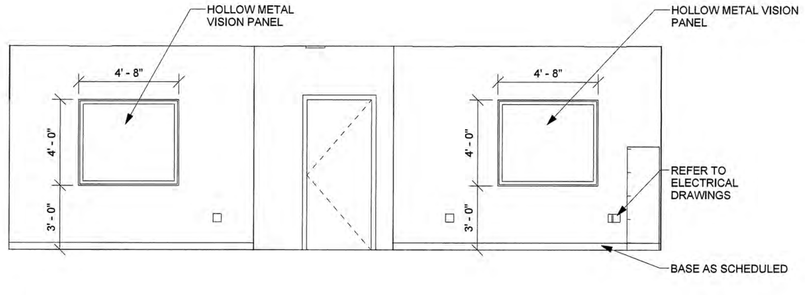

13 POLICE OFFICE - EAST ELEVATION
A-701 SCALE: 1/4" = 1'-0"

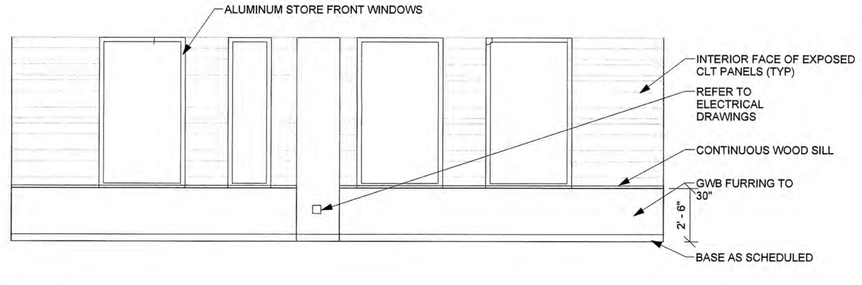

14 POLICE OFFICE - WEST ELEVATION
A-701 SCALE: 1/4" = 1'-0"

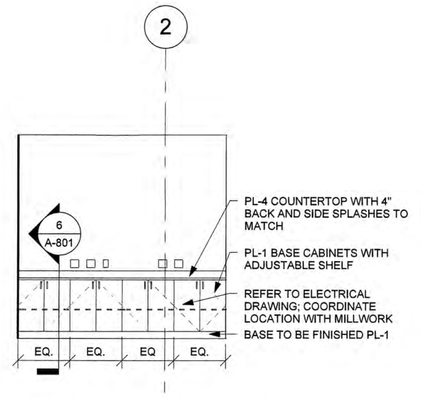

15 POLICE PRINTER/COPY - SOUTH
A-701 SCALE: 1/4" = 1'-0"

Greenville
NORTH CAROLINA

JACOBS
333 Fayetteville Street, Suite 1100
Raleigh, NC 27601
PH: 919-334-3100 FX: 919-334-3122 www.jacobs.com
North Carolina Engineering Firm License No. F-287
North Carolina Architectural Firm Reg. No. 50757

AYERS SAINT GROSS

Consultants:
ARK Consulting Group, PLLC

Coaly Design
Landscape Architecture + Land Planning

Seals:

JOHN A. STEVERMER, NC LICENSE NO. 5858

General Notes:

Project Client:
CITY OF GREENVILLE

GREENVILLE TRANSPORTATION ACTIVITY CENTER
600 S. Pitt Street, Greenville, NC

Number	Description	Date
0	IFC	05-10-2016

Key Plan: Project North

CAD File:
Project No.: L3005900
Copyright: 2015 Jacobs Engineering Group

Drawing Sheet Title:
INTERIOR ELEVATIONS FIRST FLOOR

Drawing Sheet Number:
A-701

Owner's Drawing Sheet No.:

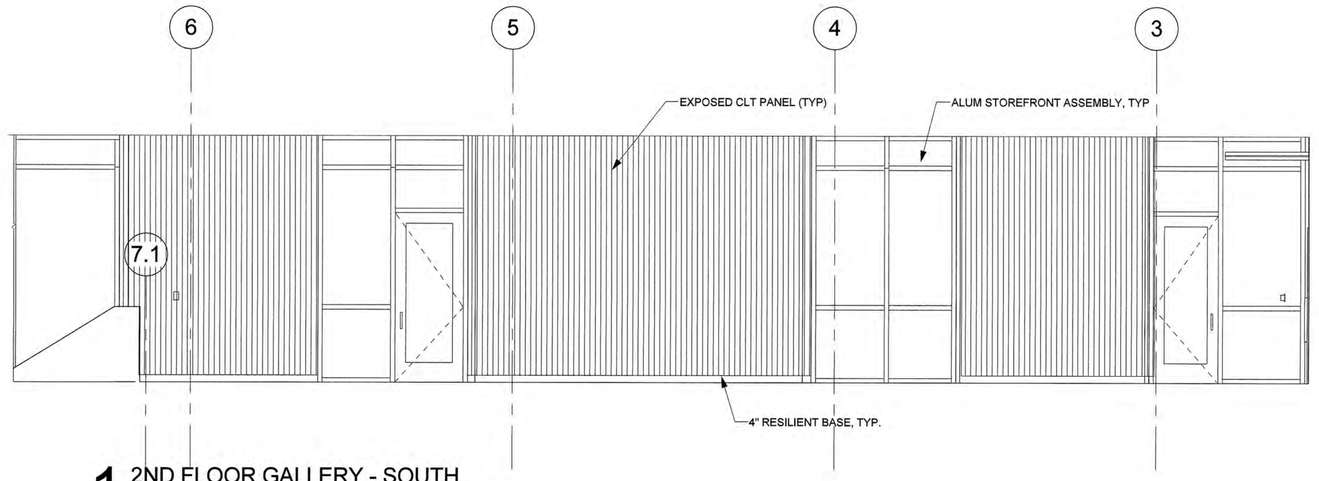

1 2ND FLOOR GALLERY - SOUTH ELEVATION
A-702 SCALE: 1/4" = 1'-0"

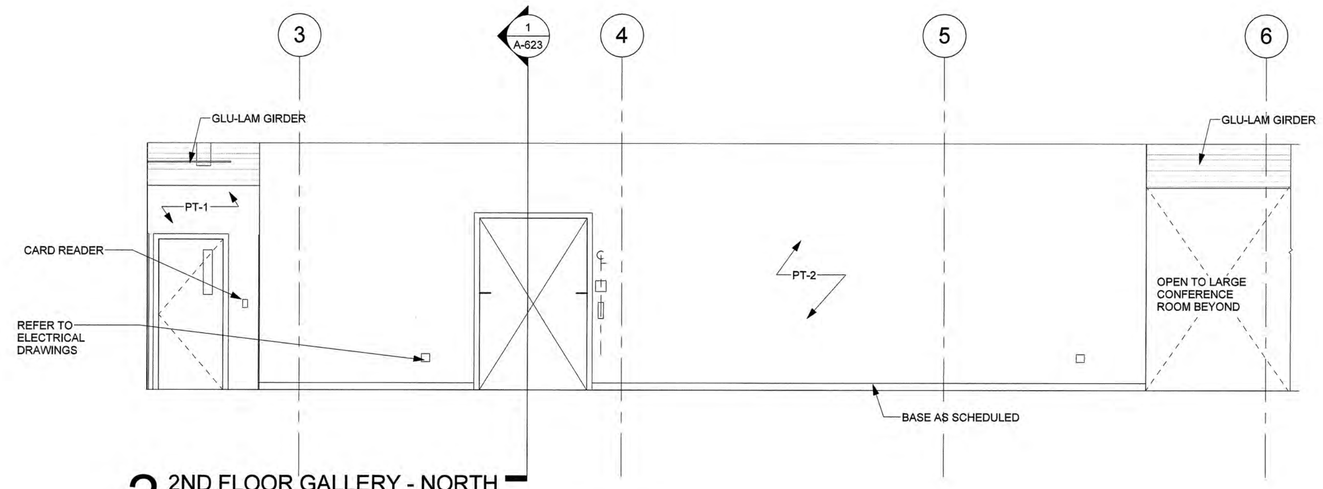

2 2ND FLOOR GALLERY - NORTH ELEVATION
A-702 SCALE: 1/4" = 1'-0"

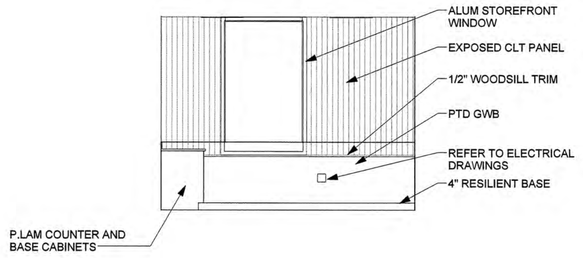

3 PRINTER/COPY - WEST ELEVATION
A-702 SCALE: 1/4" = 1'-0"

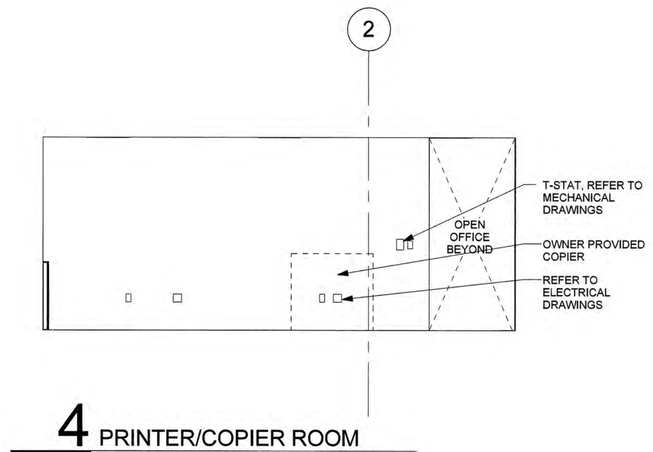

4 PRINTER/COPIER ROOM
A-702 SCALE: 1/4" = 1'-0"

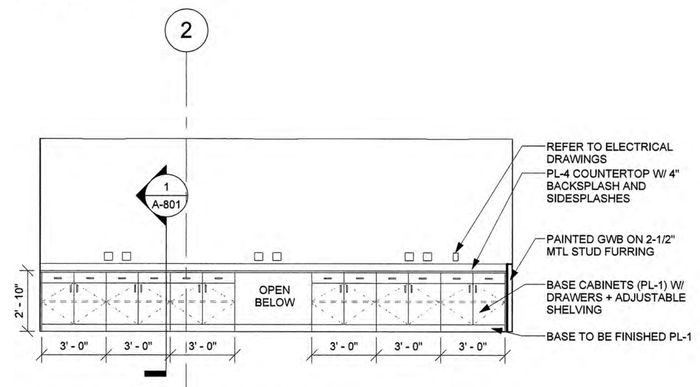

5 PRINTER/COPY - SOUTH ELEVATION
A-702 SCALE: 1/4" = 1'-0"

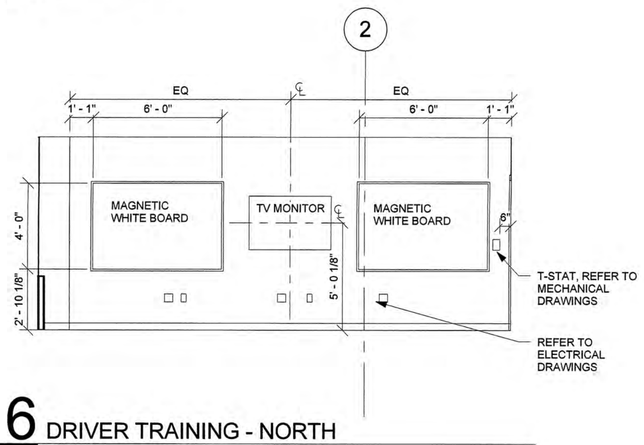

6 DRIVER TRAINING - NORTH
A-702 SCALE: 1/4" = 1'-0"

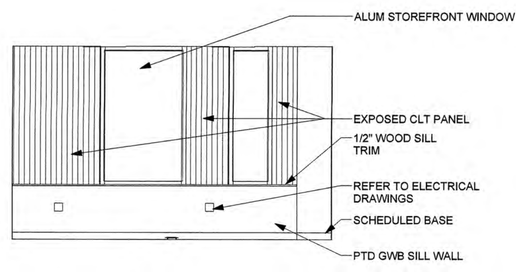

7 DRIVER TRAINING - WEST ELEVATION
A-702 SCALE: 1/4" = 1'-0"

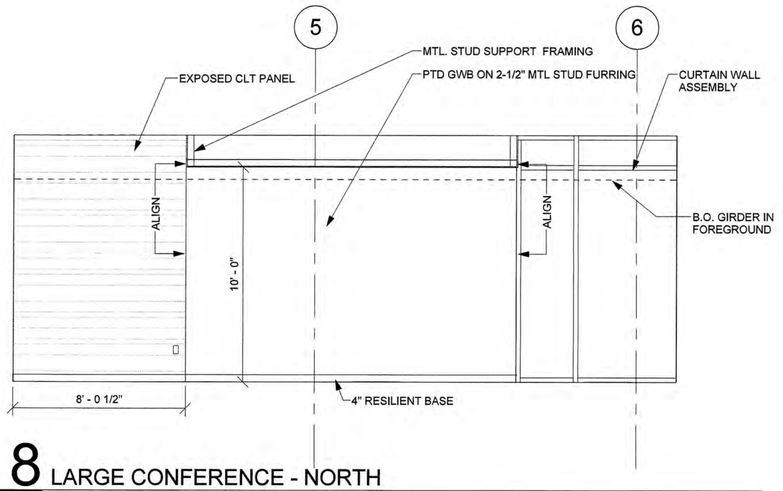

8 LARGE CONFERENCE - NORTH
A-702 SCALE: 1/4" = 1'-0"

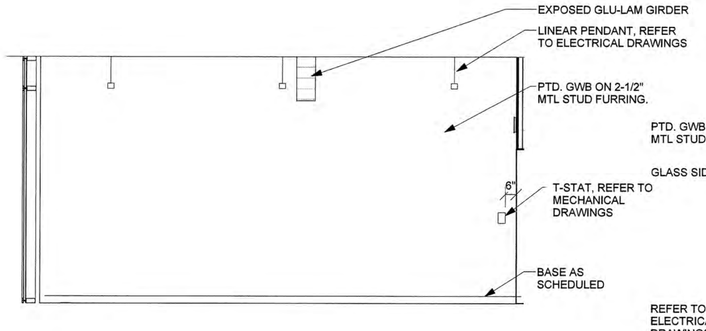

9 LARGE CONFERENCE - EAST
A-702 SCALE: 1/4" = 1'-0"

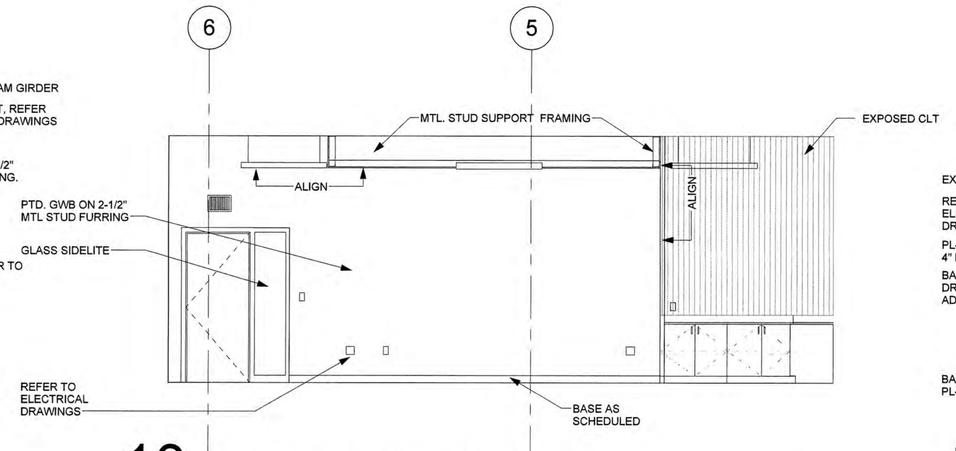

10 LARGE CONFERENCE - SOUTH
A-702 SCALE: 1/4" = 1'-0"

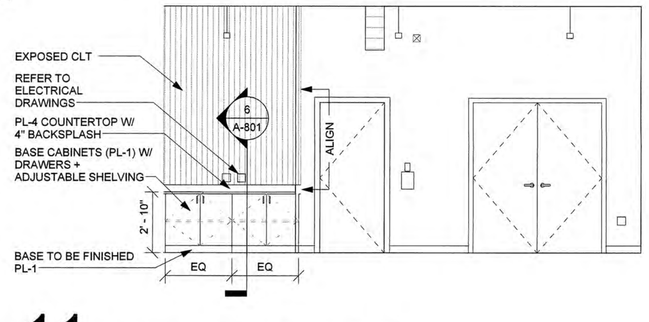

11 LARGE CONFERENCE - WEST
A-702 SCALE: 1/4" = 1'-0"

Greenville
NORTH CAROLINA

JACOBS
333 Fayetteville Street, Suite 1100
Raleigh, NC 27601
PH: 919-334-3100 FX: 919-334-3122 www.jacobs.com
North Carolina Engineering Firm License No. F-287
North Carolina Architectural Firm Reg. No. 50757

AYERS SAINT GROSS

Consultants:
ARK Consulting Group, PLLC

Coaly Design
Landscape Architecture + Land Planning

Seals:

JOHN A. STEVERMER, NC LICENSE NO. 5858

General Notes:

Project Client:
CITY OF GREENVILLE

GREENVILLE TRANSPORTATION ACTIVITY CENTER
600 S. Pitt Street, Greenville, NC

Number	Description	Date
0	IFC	05-10-2016

Key Plan: Project North

CAD File:
Project No.: L3005900
Copyright: 2015 Jacobs Engineering Group

Drawing Sheet Title:
INTERIOR ELEVATIONS
2ND FLOOR

Drawing Sheet Number:
A-702

Owner's Drawing Sheet No.:

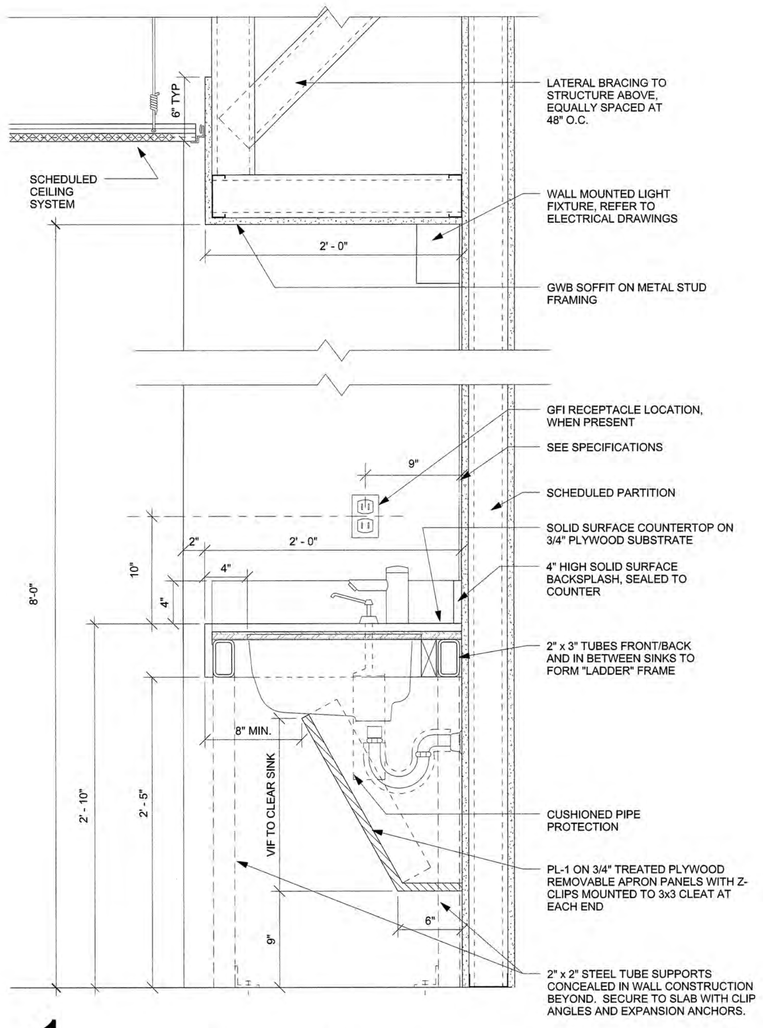

1 VANITY WITH SINK AND SOFFIT
A-800 SCALE: 1 1/2" = 1'-0"

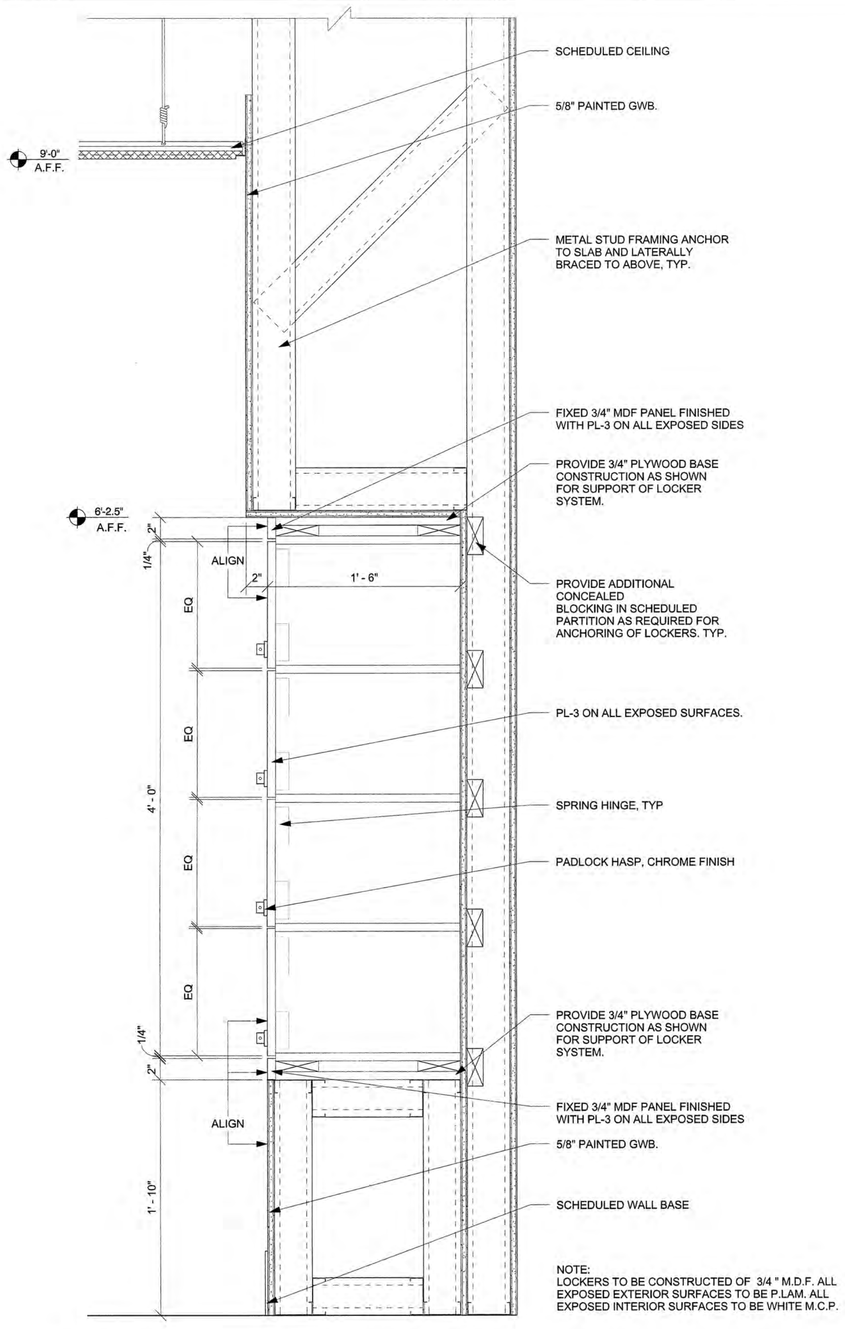

2 LOCKERS SECTION WITH SOFFIT
A-800 SCALE: 1 1/2" = 1'-0"

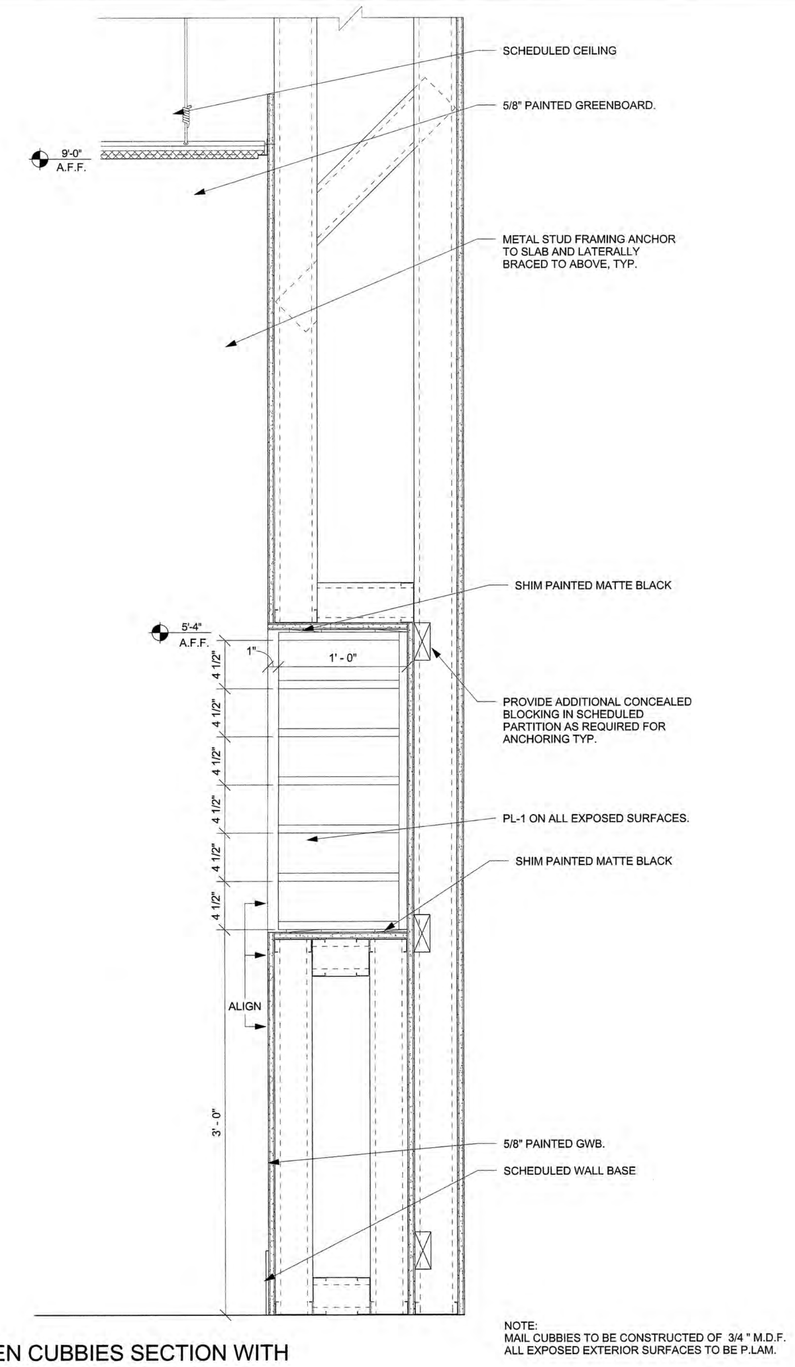

3 OPEN CUBBIES SECTION WITH SOFFIT
A-800 SCALE: 1 1/2" = 1'-0"

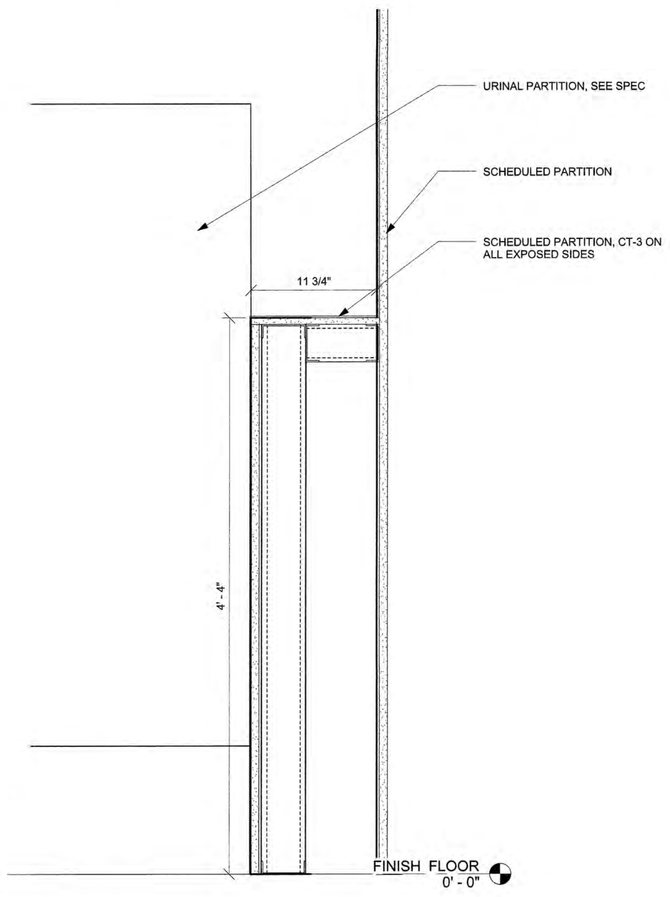

4 URINAL WALL SECTION
A-800 SCALE: 1 1/2" = 1'-0"

Greenville
NORTH CAROLINA

JACOBS
333 Fayetteville Street, Suite 1100
Raleigh, NC 27601
PH: 919-334-3100 FX: 919-334-3122 www.jacobs.com
North Carolina Engineering Firm License No. F-287
North Carolina Architectural Firm Reg. No. 50757

AYERS SAINT GROSS

Consultants:
ARK Consulting Group, PLLC

Coaly Design
Landscape Architecture + Land Planning

Seals:

JOHN A. STEVERMER, NC LICENSE NO. 5858

General Notes:

Project Client:
CITY OF GREENVILLE

GREENVILLE TRANSPORTATION ACTIVITY CENTER
600 S. Pitt Street, Greenville, NC

Number	Description	Date
0	IFC	05-10-2016

Key Plan: Project North

CAD File:
Project No.: L3005900
Copyright: 2015 Jacobs Engineering Group

Drawing Sheet Title:
INTERIOR SECTIONS

Drawing Sheet Number:
A-800

Owner's Drawing Sheet No.:

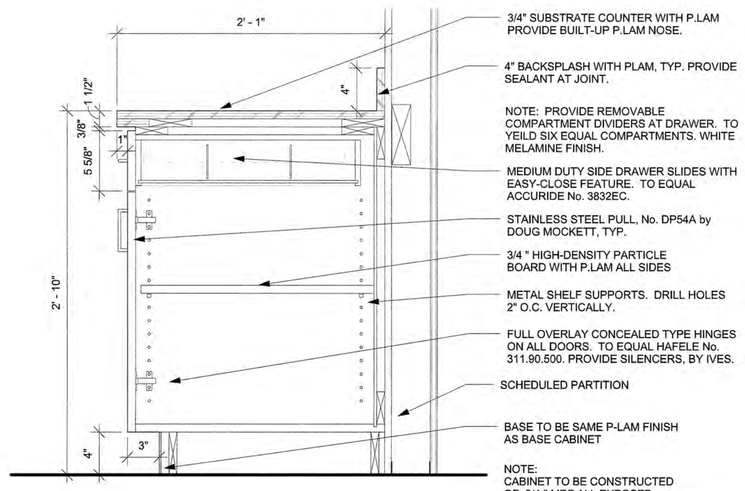

1 BASE CABINET with DRAWER

A-801 SCALE: 1 1/2" = 1'-0"

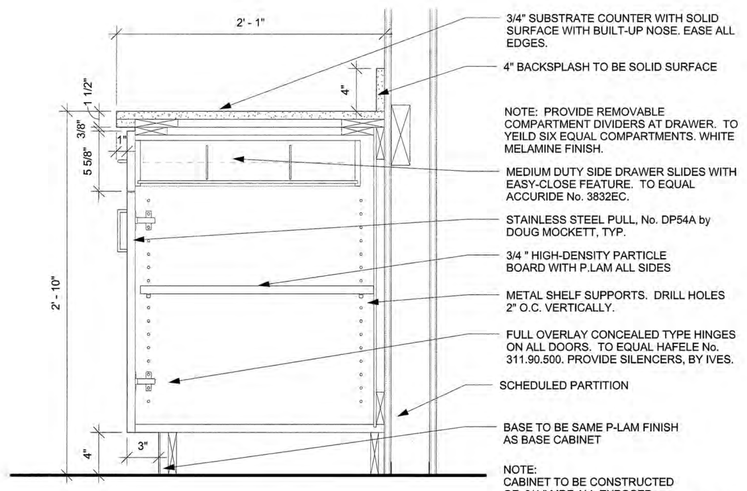

2 BASE CABINET with DRAWER

A-801 SCALE: 1 1/2" = 1'-0"

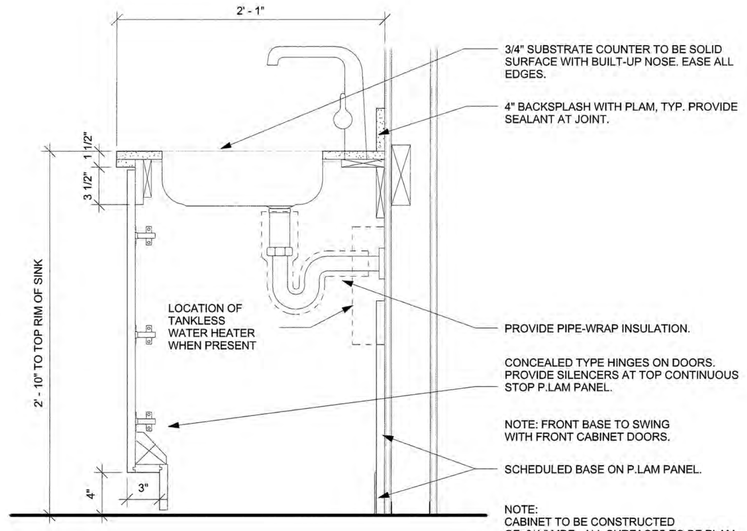

3 BASE CABINET AT SINK

A-801 SCALE: 1 1/2" = 1'-0"

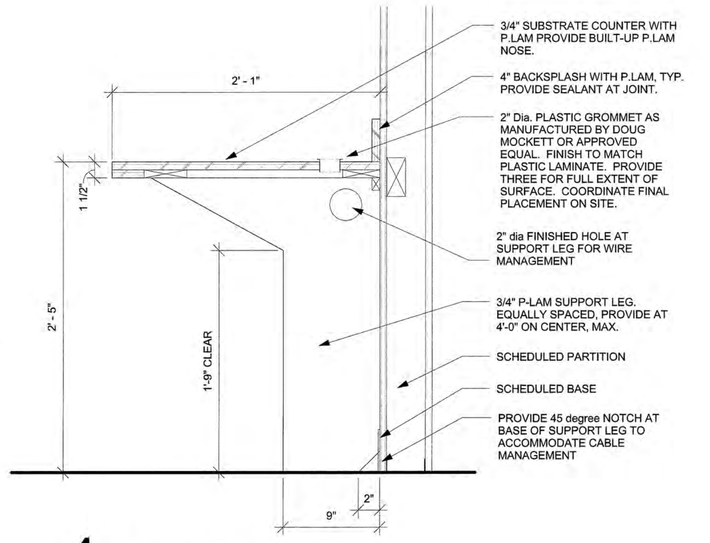

4 WORK COUNTER

A-801 SCALE: 1 1/2" = 1'-0"

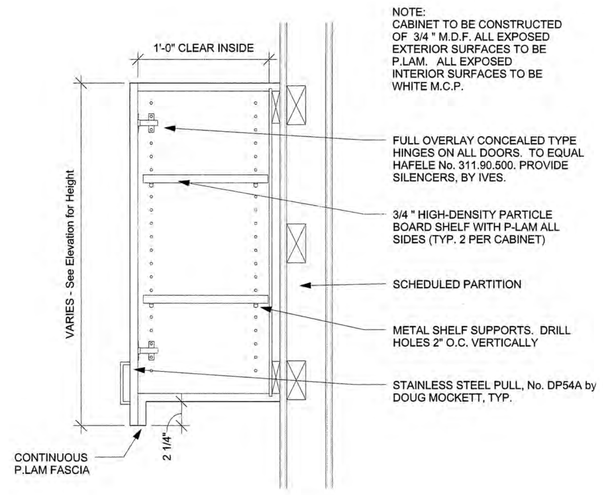

5 TYPICAL OVERHEAD CABINET

A-801 SCALE: 1 1/2" = 1'-0"

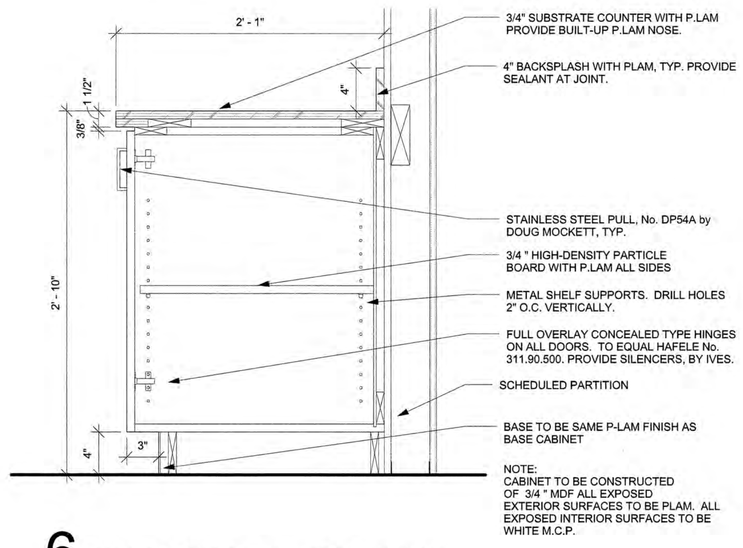

6 BASE CABINET with NO DRAWER

A-801 SCALE: 1 1/2" = 1'-0"

OR

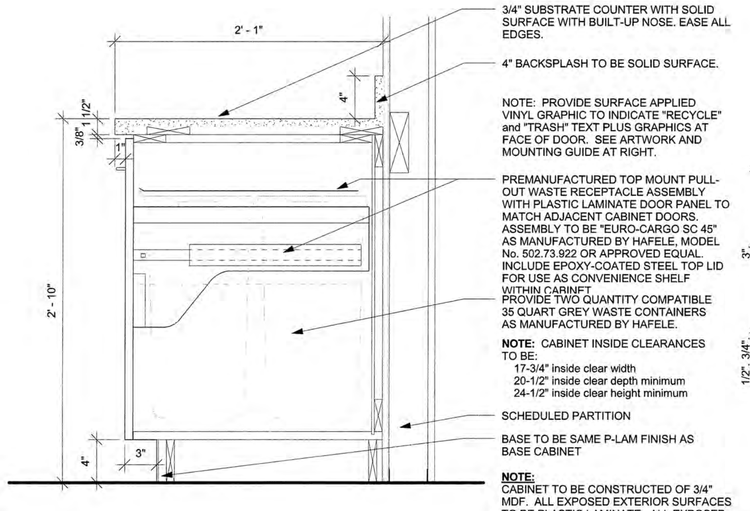

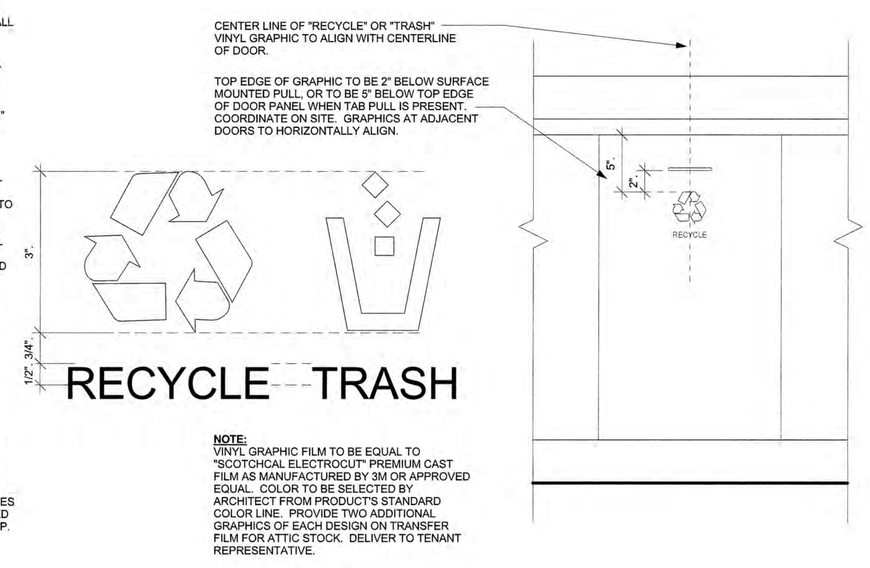

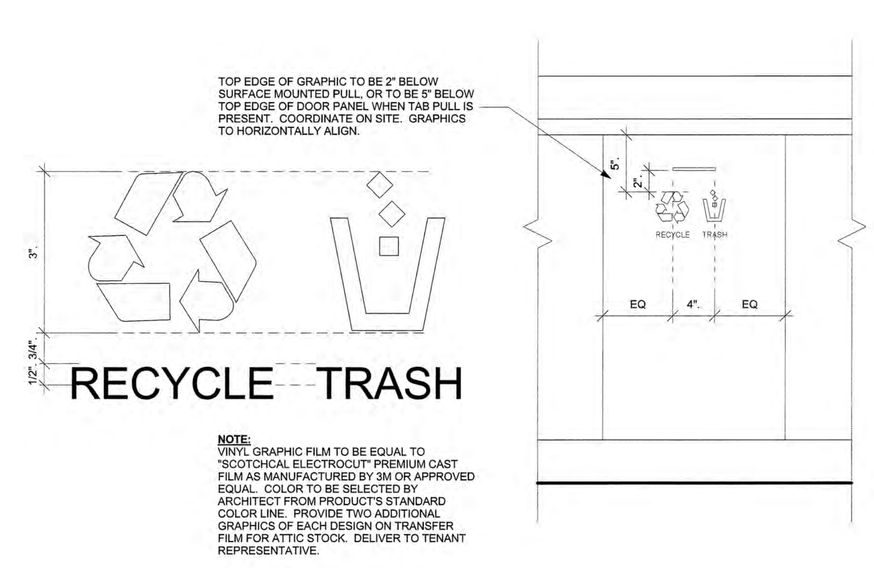

7 BASE CABINET with TRASH PULL-OUT

A-801 SCALE: 1 1/2" = 1'-0"

Greenville
NORTH CAROLINA

JACOBS
333 Fayetteville Street, Suite 1100
Raleigh, NC 27601
PH: 919-334-3100 FX: 919-334-3122 www.jacobs.com
North Carolina Engineering Firm License No. F-287
North Carolina Architectural Firm Reg. No. 50757

AYERS SAINT GROSS

Consultants:
ARK Consulting Group, PLLC

Coaly Design
Landscape Architecture + Land Planning

Seals:
JOHN A. STEVERMER REGISTERED ARCHITECT 5858 NORTH CAROLINA DURHAM, N.C.
05-09-16

JOHN A. STEVERMER, NC LICENSE NO. 5858

General Notes:

Project Client:
CITY OF GREENVILLE

GREENVILLE TRANSPORTATION ACTIVITY CENTER
600 S. Pitt Street, Greenville, NC

Number	Description	Date
0	IFC	05-10-2016

Key Plan: Project North

CAD File:
Project No.: L3005900
Copyright: 2015 Jacobs Engineering Group

Drawing Sheet Title:
INTERIOR DETAILS

Drawing Sheet Number:
A-801

Owner's Drawing Sheet No.:

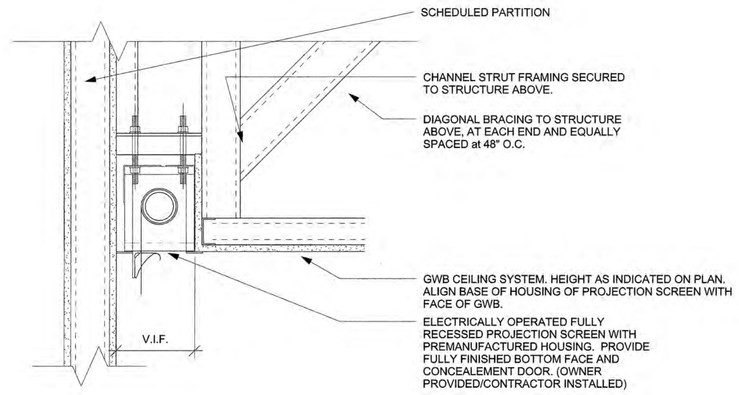

1 SECTION AT PROJECTION SCREEN FRAMING CONFERENCE CENTER
A-802 SCALE: 1 1/2" = 1'-0"

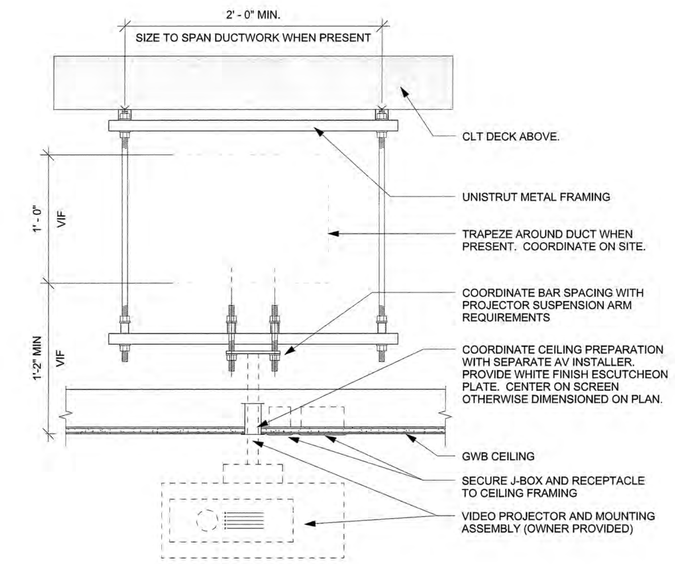

2 FRAMING SECTION at CEILING MOUNTED PROJECTOR CONFERENCE CENTER
A-802 SCALE: 1 1/2" = 1'-0"

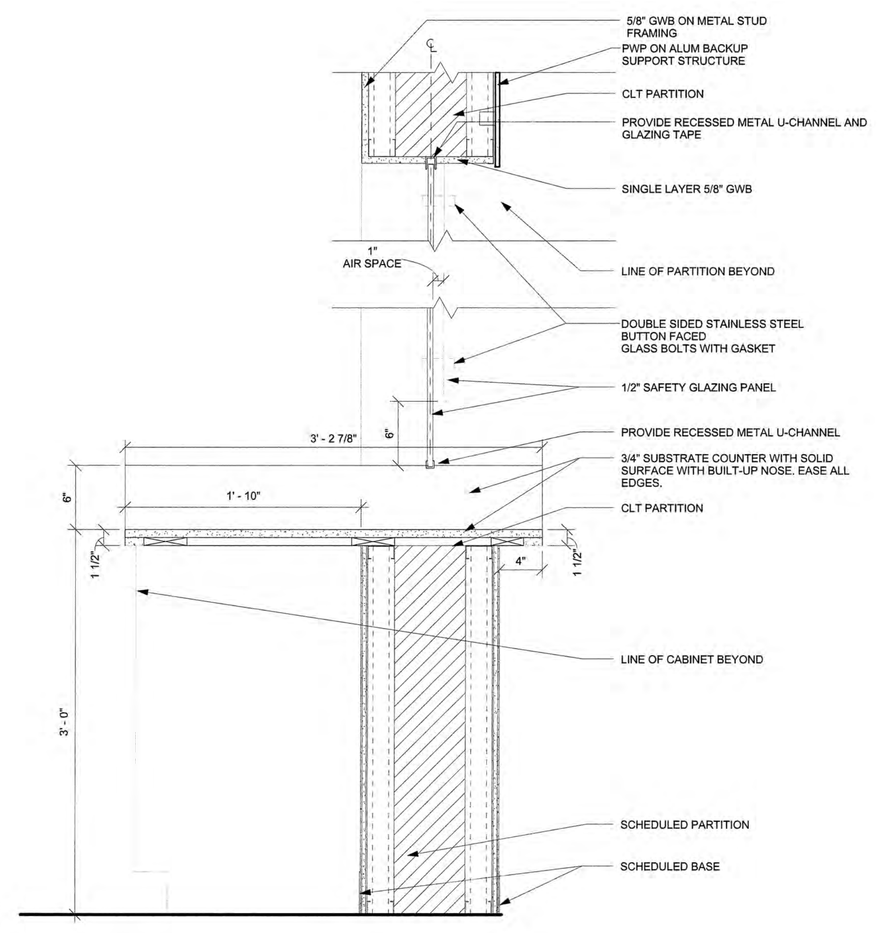

3 TICKET COUNTER
A-802 SCALE: 1 1/2" = 1'-0"

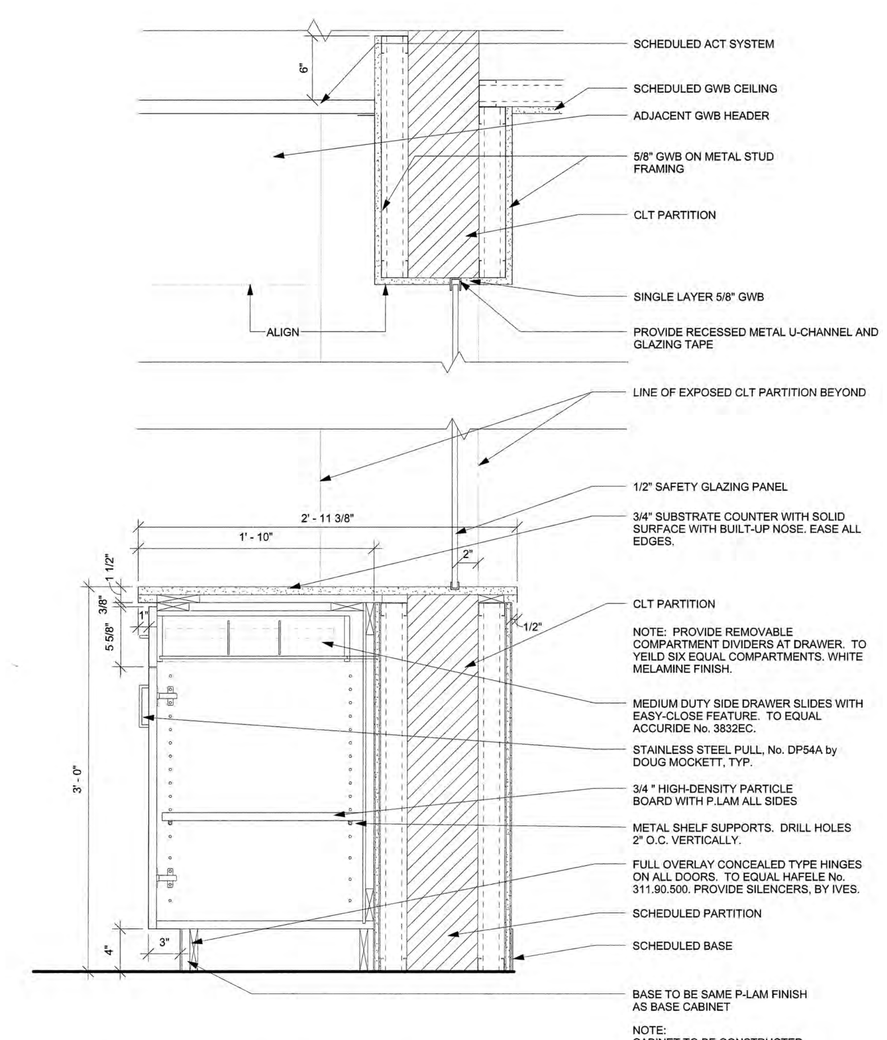

NOTE:
CABINET TO BE CONSTRUCTED OF 3/4 " MDF ALL EXPOSED EXTERIOR SURFACES TO BE P-LAM U.N.O. ALL EXPOSED INTERIOR SURFACES TO BE WHITE M.C.P.

4 BASE CABINET with DRAWER AT TICKET COUNTER (ALL DRAWER UNIT SIMILAR)
A-802 SCALE: 1 1/2" = 1'-0"

Greenville
NORTH CAROLINA

JACOBS
333 Fayetteville Street, Suite 1100
Raleigh, NC 27601
PH: 919-334-3100 FX: 919-334-3122 www.jacobs.com
North Carolina Engineering Firm License No. F-287
North Carolina Architectural Firm Reg. No. 50757

AYERS SAINT GROSS

Consultants:
ARK Consulting Group, PLLC

Coaly Design
Landscape Architecture + Land Planning

Seals:

JOHN A. STEVERMER, NC LICENSE NO. 5858

General Notes:

Project Client:
CITY OF GREENVILLE

GREENVILLE TRANSPORTATION ACTIVITY CENTER
600 S. Pitt Street, Greenville, NC

Number	Description	Date
0	IFC	05-10-2016

Key Plan: Project North

CAD File:
Project No.: L3005900
Copyright: 2015 Jacobs Engineering Group

Drawing Sheet Title:
INTERIOR DETAILS

Drawing Sheet Number:
A-802

Owner's Drawing Sheet No.:

FURNITURE LEGEND

CHAIRS PROVIDED BY OWNER

CHAIR		BASIS OF DESIGN	ALTERNATE 1	ALTERNATE 2
CH-1	MANUFACTURER	STEELCASE	SIT ON IT	9 TO 5
	STYLE NAME/NO.	THINK	FOCUS	VAULT
	SEAT HEIGHT	TASK HIGHT WITH NUMATIC LIFT	TASK HIGHT WITH NUMATIC LIFT	TASK HIGHT WITH NUMATIC LIFT
	SEAT	UPHOLSTERED - GRADE 1	UPHOLSTERED - GRADE 1	UPHOLSTERED - GRADE 1
	BACK	UPHOLSTERED - GRADE 1	UPHOLSTERED - GRADE 1	UPHOLSTERED - GRADE 1
	FRAME COLOR	PLATINUM METALLIC FINISH	PLATINUM METALLIC FINISH	HIGH PROFILE POLY
	FEET	CASTERS	CASTERS	CASTERS
	ARMS	YES - ADJUSTABLE	YES - ADJUSTABLE	YES - ADJUSTABLE
CH-2	MANUFACTURER	STEELCASE	ALLSEATING	GLOBAL
	STYLE NAME/NO.	MOVE	TUCK	DUET
	SEAT HEIGHT	TASK HEIGHT	TASK HEIGHT	TASK HEIGHT
	SEAT	UPHOLSTERED - GRADE 1	UPHOLSTERED - GRADE 1	UPHOLSTERED - GRADE 1
	BACK	PLASTIC	PLASTIC	PLASTIC
	FRAME COLOR	PLATINUM METALLIC	CHROME	CHROME
	FEET	GLIDES	GLIDES	GLIDES
	ARMS	NO	NO	NO
CH-3	MANUFACTURER	STEELCASE	ALLSEATING	GLOABL
	STYLE NAME/NO.	MOVE	TUCK	DUET
	SEAT HEIGHT	STOOL HEIGHT	STOOL HEIGHT	STOOL HEIGHT
	SEAT	UPHOLSTERED - GRADE 1	UPHOLSTERED - GRADE 1	UPHOLSTERED - GRADE 1
	BACK	PLASTIC	PLASTIC	PLASTIC
	FRAME COLOR	PLATINUM METALLIC	CHROME	CHROME
	FEET	GLIDES	GLIDES	GLIDES
	ARMS	NO	NO	NO

WHITE BOARDS & TACK BOARDS BY OWNER

WHITE BOARD & TACK BOARD

WB-1	MANUFACTURER	STEELCASE	EGAN	CLARIDGE
	NAME	EDGE SERIES	PRESENTATION BOARD	TRIMLINE PLUS
	COLOR	WHITE	WHITE	WHITE
	SIZE	3'w x 3'h	3'w x 3'h	3'w x 3'h
	REMARKS	MAGNETIC	MAGNETIC	MAGNETIC
WB-2	MANUFACTURER	STEELCASE	EGAN	CLARIDGE
	NAME	EDGE SERIES	PRESENTATION BOARD	TRIMLINE PLUS
	COLOR	WHITE	WHITE	WHITE
	SIZE	6'w x 4'h	6'w x 4'h	6'w x 4'h
	REMARKS	MAGNETIC	MAGNETIC	MAGNETIC
TK-1	MANUFACTURER	STEELCASE	EGAN	CLARIDGE
	NAME	EDGE SERIES	PRESENTATION BOARD	800 SERIES
	COLOR	TACKABLE CORK BOARD	TACKABLE CORK BOARD	TACKABLE CORK BOARD
	SIZE	6'w x 4'h	6'w x 4'h	6'w x 4'h
	REMARKS	CORK BOARD	CORK BOARD	CORK BOARD

FILE CABINETS BY OWNER

FILE CABINET

F-1	MANUFACTURER	STEELCASE	GLOBAL	GREAT OPENINGS
	NAME	UNIVERSAL	9300P SERIES	TRACE
	COLOR	WHITE METAL	WHITE METAL	WHITE METAL
	SIZE	4 DRAWERS HIGH X 36"W X 18D	4 DRAWERS HIGH X 36"W X 18D	4 DRAWERS HIGH X 36"W X 18D
	REMARKS	LOCKING	LOCKING	LOCKING

DESKS BY OWNER

DESK

D-1	MANUFACTURER	STEELCASE	NATIONAL	GLOBAL
	STYLE NAME/NO.	CURRENCY	RENEGADE	ADAPTIBILITIES
	SIZE	76" X 88" X 29" - "L" shape	76" X 88" X 29" - "L" shape	76" X 88" X 29" - "L" shape
	TOP MATERIAL	LAMINATE	LAMINATE	LAMINATE
	LEGS/FRAME	LAMINATE	LAMINATE	LAMINATE
	FRAME COLOR	PLATINUM METALLIC	LAMINATE	LAMINATE
	STORAGE	LAMINATE	LAMINATE	LAMINATE
	POWERED	NO	NO	NO
	MODESTY PANEL	NO	NO	NO
D-2	MANUFACTURER	STEELCASE	NATIONAL	GLOBAL
	STYLE NAME/NO.	CURRENCY	RENEGADE	ADAPTIBILITIES
	SIZE	72" X 72" X 29" - "L" shape	72" X 72" X 29" - "L" shape	72" X 72" X 29" - "L" shape
	TOP MATERIAL	LAMINATE	LAMINATE	LAMINATE
	LEGS/FRAME	LAMINATE	LAMINATE	LAMINATE
	FRAME COLOR	PLATINUM METALLIC	LAMINATE	LAMINATE
	STORAGE	LAMINATE	LAMINATE	LAMINATE
	POWERED	NO	NO	NO
	MODESTY PANEL	NO	NO	NO

TABLES PROVIDED BY OWNER

TABLE		BASIS OF DESIGN	ALTERNATE 1	ALTERNATE 2
T-1	MANUFACTURER	COALESSE	SYMPHONY	GLOBAL
	STYLE NAME/NO.	BALLET	ZOEY	JUNCTION
	SIZE	66" X 30" X 29"	66" X 30" X 29"	66" X 30" X 29"
	TOP MATERIAL	LAMINATE	LAMINATE	LAMINATE
	LEGS/FRAME	POWDERCOAT	POWDERCOAT	PAINT
	FRAME COLOR	METALLIC GLOSS	METALLIC	METALLIC
	FEET	GLIDES	GLIDES	GLIDES
	POWERED	NO	NO	NO
	MODESTY PANEL	YES	YES	YES
T-2	MANUFACTURER	COALESSE	STEELCASE	SYMPHONY
	STYLE NAME/NO.	BALLET	GROUPWORK	ZOEY
	SIZE	60" X 30" X 29"	60" X 30" X 29"	60" X 30" X 29"
	TOP MATERIAL	LAMINATE	LAMINATE	LAMINATE
	LEGS/FRAME	POWDERCOAT	PAINT	POWDERCOAT
	FRAME COLOR	METALLIC GLOSS	PLATINUM METALLIC	METALLIC
	FEET	GLIDES	GLIDES	GLIDES
	POWERED	NO	NO	NO
	MODESTY PANEL	YES	YES	YES
T-3	MANUFACTURER	COALESSE	STEELCASE	GLOBAL
	STYLE NAME/NO.	BALLET	GROUPWORK	ALBA
	SIZE	90" X 30" X 29"	90" X 30" X 29"	90" X 30" X 29"
	TOP MATERIAL	LAMINATE	LAMINATE	LAMINATE
	LEGS/FRAME	POWDERCOAT	PAINT	PAINT
	FRAME COLOR	METALLIC GLOSS	PLATINUM METALLIC	METALLIC
	FEET	GLIDES	GLIDES	GLIDES
	POWERED	YES	YES	YES
	MODESTY PANEL	NO	NO	NO
T-4	MANUFACTURER	COALESSE	OFS	GLOBAL
	STYLE NAME/NO.	BALLET	ELEVEN	ALBA
	SIZE	60" X 36" X 29"	60" X 36" X 29"	60" X 36" X 29"
	TOP MATERIAL	LAMINATE	LAMINATE	LAMINATE
	LEGS/FRAME	POWDERCOAT	METAL	PAINT
	FRAME COLOR	PLATINUM METALLIC	METALLIC	METALLIC
	FEET	GLIDES	GLIDES	GLIDES
	POWERED	NO	NO	NO
	MODESTY PANEL	NO	NO	NO
T-5	MANUFACTURER	COALESSE	TURNSTONE	FURNITURE LAB
	STYLE NAME/NO.	ENEA LOTTUS	SIMPLE	METRO
	SIZE	30" DIA. X 42"H	30" DIA. X 42"H	30" DIA. X 42"H
	TOP MATERIAL	LAMINATE	LAMINATE	LAMINATE
	LEGS/FRAME	METAL	METAL	METAL
	FRAME COLOR	PLATINUM SILVER	PLATINUM METALLIC	SILVER
	FEET	GLIDES	GLIDES	GLIDES
	POWERED	NO	NO	NO
	MODESTY PANEL	NO	NO	NO
T-6	MANUFACTURER	COALESSE	FURNITURE LAB	ERG
	STYLE NAME/NO.	ENEA LOTTUS	METRO	CORSA
	SIZE	36" DIA. X 29"H	36" DIA. X 29"H	36" DIA. X 29"H
	TOP MATERIAL	LAMINATE	LAMINATE	LAMINATE
	LEGS/FRAME	METAL	METAL	STAINLESS STEEL
	FRAME COLOR	PLATINUM SILVER	SILVER	SILVER
	FEET	GLIDES	GLIDES	GLIDES
	POWERED	NO	NO	NO
	MODESTY PANEL	NO	NO	NO
T-7	MANUFACTURER	COALESSE	FURNITURE LAB	ERG
	STYLE NAME/NO.	ENEA LOTTUS	METRO	CORSA
	SIZE	30" DIA. X 29" H	30" DIA. X 29" H	30" DIA. X 29" H
	TOP MATERIAL	LAMINATE	LAMINATE	LAMINATE
	LEGS/FRAME	METAL	METAL	STAINLESS STEEL
	FRAME COLOR	PLATINUM SILVER	SILVER	SILVER
	FEET	GLIDES	GLIDES	GLIDES
	POWERED	NO	NO	NO
	MODESTY PANEL	NO	NO	NO

BENCH		BASIS OF DESIGN	ALTERNATE 1	ALTERNATE 2
B-1	MANUFACTURER	THOMAS STEELE	LANDSCAPE FORMS	FORMS+SURFACES
	STYLE NAME/NO.	VOLARE, 4 SEAT BENCH W/ BACK	PRESIDIO, 4 SEAT BENCH W/ BACK	TECHNO RS, 4 SEAT BENCH W/ BACK
	SIZE	19" X 95 /78" X 30"	30" X 92" X 31" STRAIGHT	25.7" X 92.5" X 33.5" STRAIGHT
	MATERIAL	POWER COATED STEEL	POWDER COATED STEEL	POWDER COATED STEEL
	COLOR	GUN METAL	STONE	WEATHERED IRON TEXTURE
	OPTIONS	3 CENTER ARMS, FREE STANDING	3 CENTER ARMS, FREE STANDING	3 CENTER ARMS, FREE STANDING
B-2	MANUFACTURER	THOMAS STEELE	LANDSCAPE FORMS	FORMS+SURFACES
	STYLE NAME/NO.	VOLARE, 3 SEAT BENCH W/ BACK	PRESIDIO, 3 SEAT BENCH W/ BACK	TECHNO RS, 3 SEAT BENCH W/ BACK
	SIZE	19" X 71 1/4" X 30"	30" X 69" X 31" STRAIGHT	25.7" X 68.5" X 33.5" STRAIGHT
	MATERIAL	POWER COATED STEEL	POWDER COATED STEEL	POWDER COATED STEEL
	COLOR	GUN METAL	STONE	WEATHERED IRON TEXTURE
	OPTIONS	2 CENTER ARMS, FREE STANDING	2 CENTER ARMS, FREE STANDING	2 CENTER ARMS, FREE STANDING
B-3	MANUFACTURER	THOMAS STEELE	LANDSCAPE FORMS	FORMS+SURFACES
	STYLE NAME/NO.	VOLARE, 4 SEAT BENCH W/O BACK	PRESIDIO, 4 SEAT BENCH W/O BACK	TECHNO RS, 4 SEAT BENCH W/O BACK
	SIZE	22 1/4" X 95 7/8" X 17 1/4"	22" X 92" X 24" STRAIGHT	17.7" X 92.5" X 18" STRAIGHT
	MATERIAL	POWER COATED STEEL	POWDER COATED STEEL	POWDER COATED STEEL
	COLOR	GUN METAL	STONE	WEATHERED IRON TEXTURE
	OPTIONS	3 CENTER ARMS, IN GROUND MOUNT	3 CENTER ARMS, EMBEDDED	3 CENTER ARMS, IN GROUND MOUNT

TRASH & RECYCLE RECEPTICAL		BASIS OF DESIGN	ALTERNATE 1	ALTERNATE 2
TR-1	MANUFACTURER	THOMAS STEELE	LANDSCAPE FORMS	FORMS+SURFACES
	NAME	GENORA LITTER RECEPTACLE	STEELY CAN	UNIVERSAL
	COLOR	POWER COATED STEEL	STAINLESS STEEL	STAINLESS STEEL-SATIN FINISH
	SIZE	32 GALLON CAPACITY	30 GALLON CAPACITY	30 GALLON CAPACITY
	REMARKS	LID E COLOR GUN METAL	SIDE OPENING	STD.SIDE OPENING W/ STAINLESS LID
TR-2	MANUFACTURER	THOMAS STEEL	LANDSCAPE FORMS	FORMS+SURFACES
	NAME	GENORA LITTER RECEPTACLE	STEELY CAN	UNIVERSAL
	COLOR	POWER COATED STEEL	STAINLESS STEEL	STAINLESS STEEL-SATIN FINISH
	SIZE	32 GALLON CAPACITY	39 GALLON CAPACITY	30 GALLON CAPACITY
	REMARKS	LID-CR COLOR GUN METAL	SIDE OPENING	ROUND SIDE OPENING W/ STAINLESS LID
TR-3	MANUFACTURER	LANDSCAPE FORMS	MAGNUS GROUP	MAGLIN
	NAME	HUMO ASH RECEPTACLE	VESUVIO ASH RECEPTICAL	MLAU300 SERIES
	COLOR	STAINLESS STEEL	SILVER	METAL SIDES - GLOSS SILVER 14
	SIZE	1.25 GALLONS	44-5/16" X 9-13/16" X 7-11/16"	35.875"H X 4.25 DIA
	REMARKS	SURFACE MOUNTED	GROUND FIXED	THREADED ANCHOR

BIKE RACK

BK-1	MANUFACTURER	LANDSCAPE FORMS	FORMS+SURFACES	MADRAX
	NAME	BOLA	SUMMIT BIKE RACK	ORION
	COLOR	STAINLESS STEEL	STAINLESS STEEL	STAINLESS STEEL
	OTHER		POWEDER COAT BASE: SILVER TEXTURE	SQUARE TUBING WITHOUT LEAN BAR
	REMARKS	SURFACE MOUNTED WITH EMBEDDED ANCHORS	SURFACE MOUNTED WITH EMBEDDED ANCHORS	SURFACE MOUNTED WITH EMBEDDED ANCHORS

Greenville
NORTH CAROLINA

JACOBS

333 Fayetteville Street, Suite 1100
Raleigh, NC 27601
PH: 919-334-3100 FX: 919-334-3122 www.jacobs.com
North Carolina Engineering Firm License No. F-287
North Carolina Architectural Firm Reg. No. 50757

AYERS SAINT GROSS

Consultants:

ARK Consulting Group, PLLC

Coaly Design
Landscape Architecture + Land Planning

Seals:

JOHN A. STEVERMER
REGISTERED ARCHITECT
5858
NORTH CAROLINA
05-09-16
DURHAM, N.C.

JOHN A. STEVERMER, NC LICENSE NO. 5858

General Notes:

Project Client:
CITY OF GREENVILLE

GREENVILLE
TRANSPORTATION
ACTIVITY CENTER
600 S. Pitt Street, Greenville, NC

Number	Description	Date
0	IFC	05-10-2016

Key Plan: Project North

CAD File:
Project No.: L3005900
Copyright: 2015 Jacobs Engineering Group

Drawing Sheet Title:
FURNITURE LEGEND

Drawing Sheet Number:
A-900

Owner's Drawing Sheet No.:

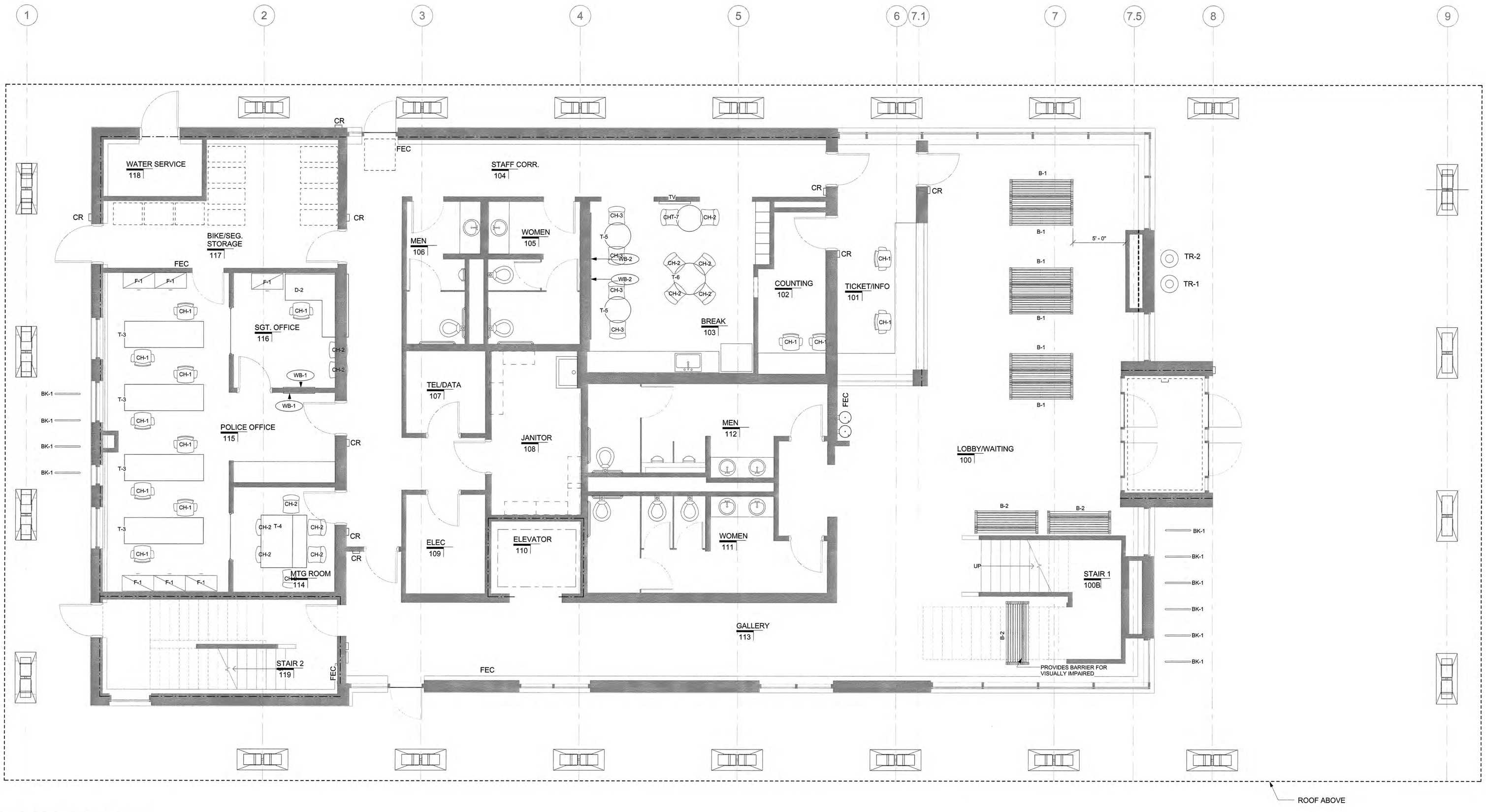

1 FIRST FLOOR FURNITURE PLAN

A-901 SCALE: 1/4" = 1'-0"

Greenville
NORTH CAROLINA

JACOBS

333 Fayetteville Street, Suite 1100
Raleigh, NC 27601
PH: 919-334-3100 FX: 919-334-3122 www.jacobs.com
North Carolina Engineering Firm License No. F-287
North Carolina Architectural Firm Reg. No. 50757

AYERS SAINT GROSS

Consultants:

ARK Consulting Group, PLLC

Coaly Design
Landscape Architecture + Land Planning

Seals:

JOHN A. STEVERMER, NC LICENSE NO. 5858

General Notes:

Project Client:
CITY OF GREENVILLE

GREENVILLE TRANSPORTATION ACTIVITY CENTER
600 S. Pitt Street, Greenville, NC

Number	Description	Date
0	IFC	05-10-2016

Key Plan:

Project North

CAD File:
Project No.: L3005900

Copyright: 2015 Jacobs Engineering Group

Drawing Sheet Title:
FIRST FLOOR FURNITURE PLAN

Drawing Sheet Number:
A-901

Owner's Drawing Sheet No.:

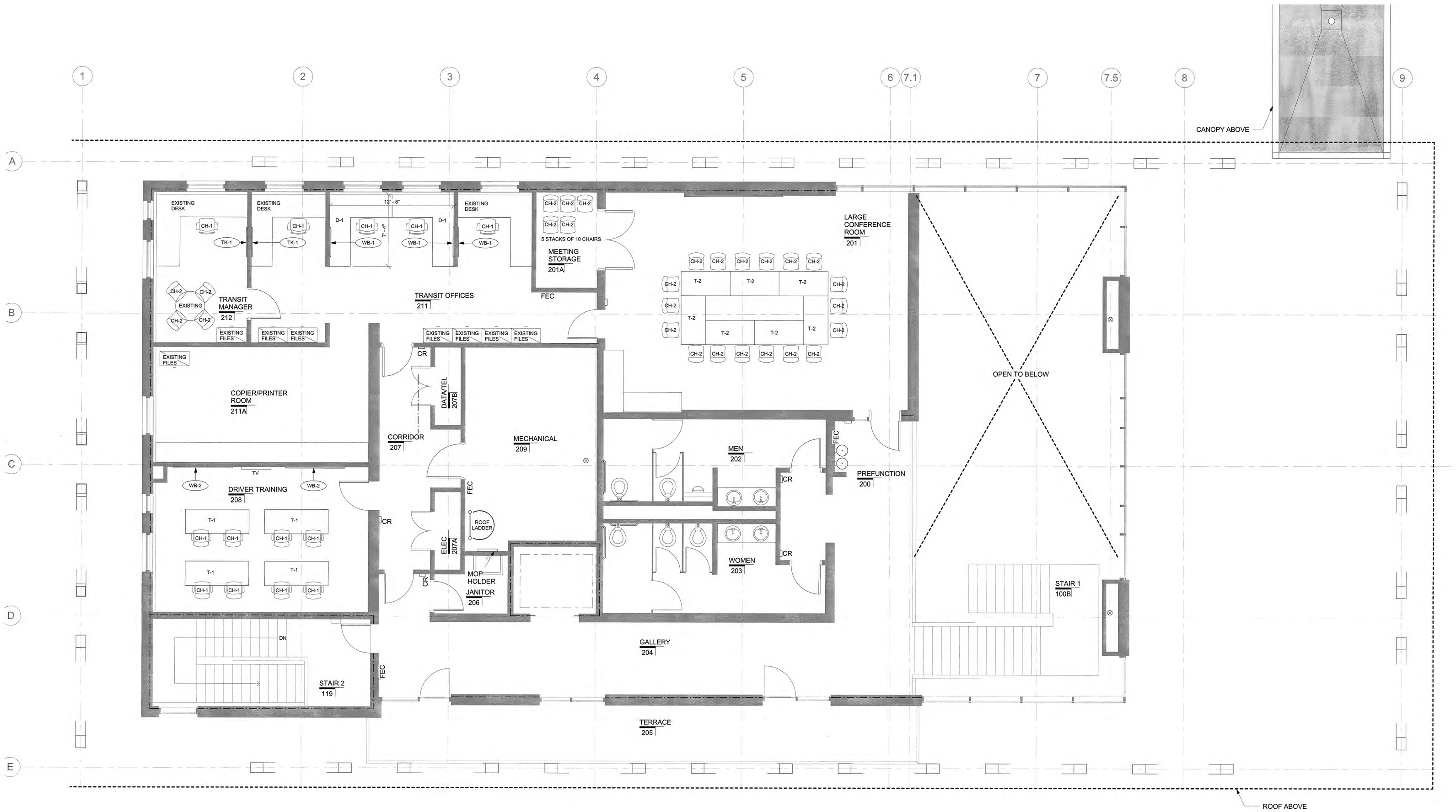

1 SECOND FLOOR FURNITURE PLAN
A-902 SCALE: 1/4" = 1'-0"

Greenville
NORTH CAROLINA

JACOBS
333 Fayetteville Street, Suite 1100
Raleigh, NC 27601
PH: 919-334-3100 FX: 919-334-3122 www.jacobs.com
North Carolina Engineering Firm License No. F-287
North Carolina Architectural Firm Reg. No. 50757

AYERS SAINT GROSS

Consultants:
ARK Consulting Group, PLLC

Coaly Design
Landscape Architecture + Land Planning

Seals:

JOHN A. STEVERMER
REGISTERED ARCHITECT
5858
NORTH CAROLINA
05-09-16
DURHAM, N.C.

JOHN A. STEVERMER, NC LICENSE NO. 5858

General Notes:
1. EXISTING DESKS AND FILES TO BE RELOCATED BY OWNER.

Project Client:
CITY OF GREENVILLE

GREENVILLE
TRANSPORTATION
ACTIVITY CENTER
600 S. Pitt Street, Greenville, NC

Number	Description	Date
0	IFC	05-10-2016

Key Plan:

Project North

CAD File:
Project No.: L3005900
Copyright: 2015 Jacobs Engineering Group

Drawing Sheet Title:
SECOND FLOOR
FURNITURE PLAN

Drawing Sheet Number:
A-902

Owner's Drawing Sheet No.:

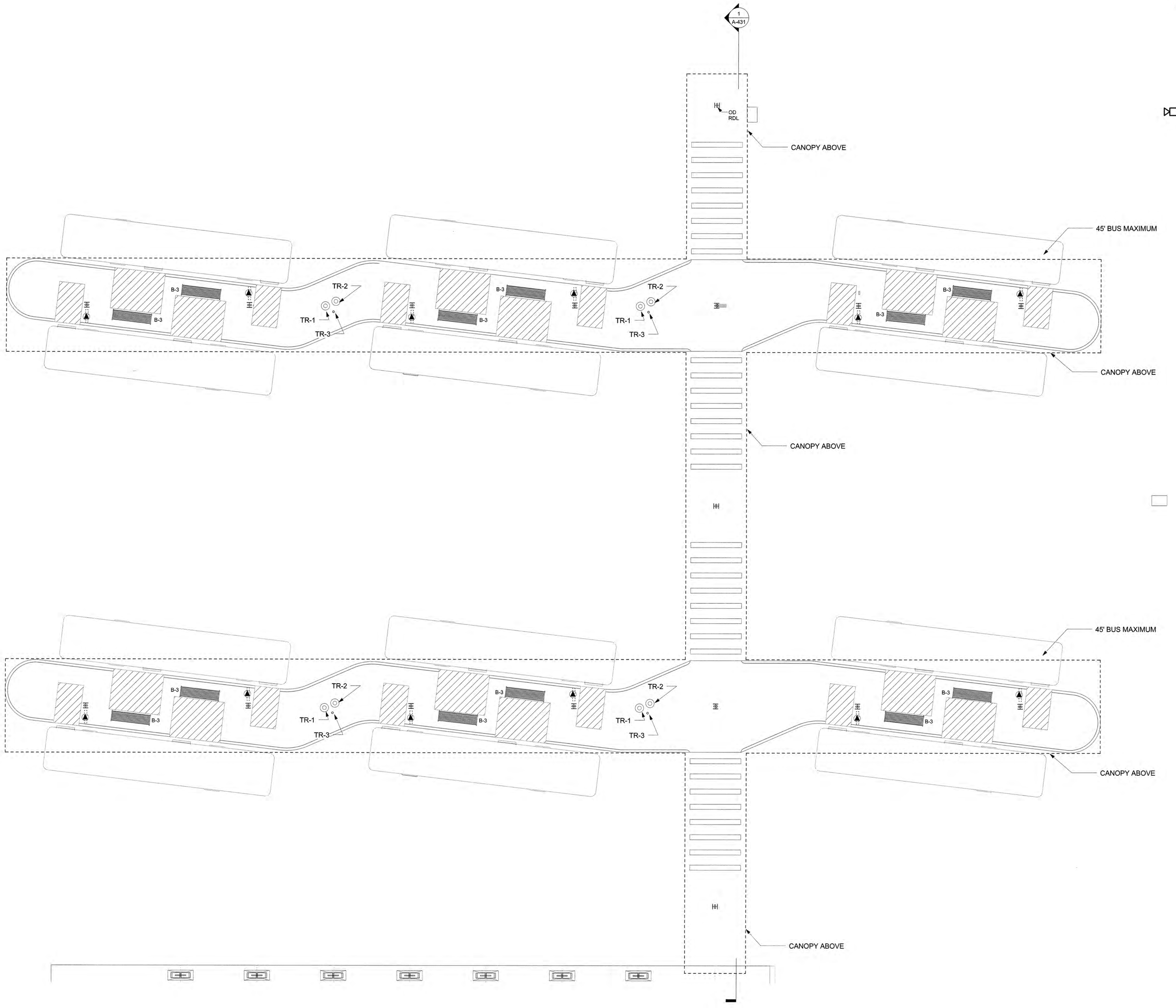

Greenville
NORTH CAROLINA

JACOBS
333 Fayetteville Street, Suite 1100
Raleigh, NC 27601
PH: 919-334-3100 FX: 919-334-3122 www.jacobs.com
North Carolina Engineering Firm License No. F-287
North Carolina Architectural Firm Reg. No. 50757

AYERS SAINT GROSS

Consultants:
ARK Consulting Group, PLLC

Coaly Design
Landscape Architecture + Land Planning

Seals:

JOHN A. STEVERMER, NC LICENSE NO. 5858

General Notes:

Project Client:
CITY OF GREENVILLE

GREENVILLE
TRANSPORTATION
ACTIVITY CENTER
600 S. Pitt Street, Greenville, NC

Number	Description	Date
0	IFC	05-10-2016

Key Plan: Project North

CAD File:
Project No.: L3005900
Copyright: 2015 Jacobs Engineering Group

Drawing Sheet Title:
FURNITURE PLAN BUS BAY

Drawing Sheet Number:
A-903

Owner's Drawing Sheet No.:

RESTROOM SIGN

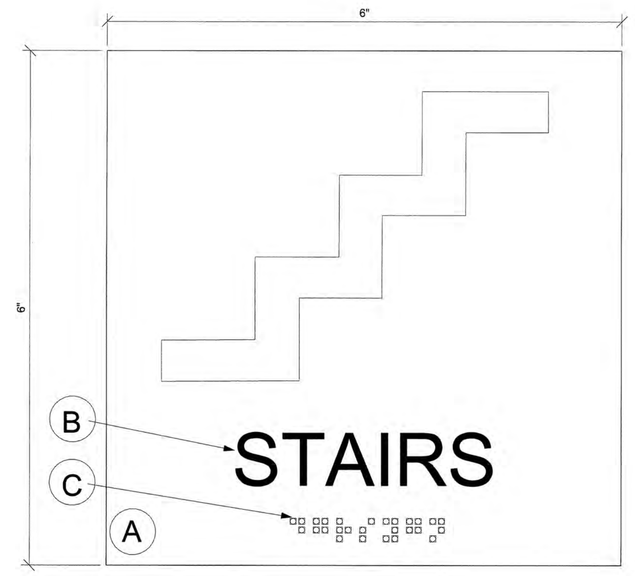

STAIR SIGN

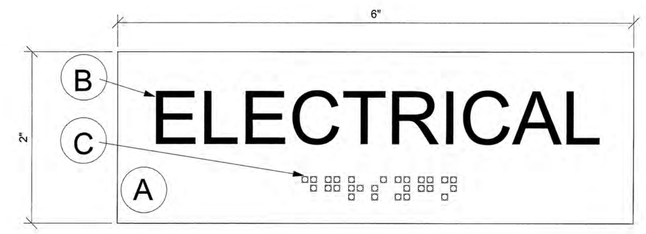

TYPICAL ROOM SIGN

FACE FINISH

(A) FORMICA 7813-58

RAISED COPY

(B) BLACK
FONT: WHITNEY SEMIBOLD

BRAILLE

(C) BLACK

1 A-903 SIGNAGE
A-910 SCALE: 12" = 1'-0"

FRONT VIEW

SIDE VIEW

(D) CAST ALUMINUM PIN-MOUNTED LETTERS IN BRUSHED STAINLESS STEEL FINISH
FONT: TO BE COORDINATED WITH OWNER

2 EXTERIOR BUILDING MOUNTED SIGN
A-910 SCALE: 1/4" = 1'-0"

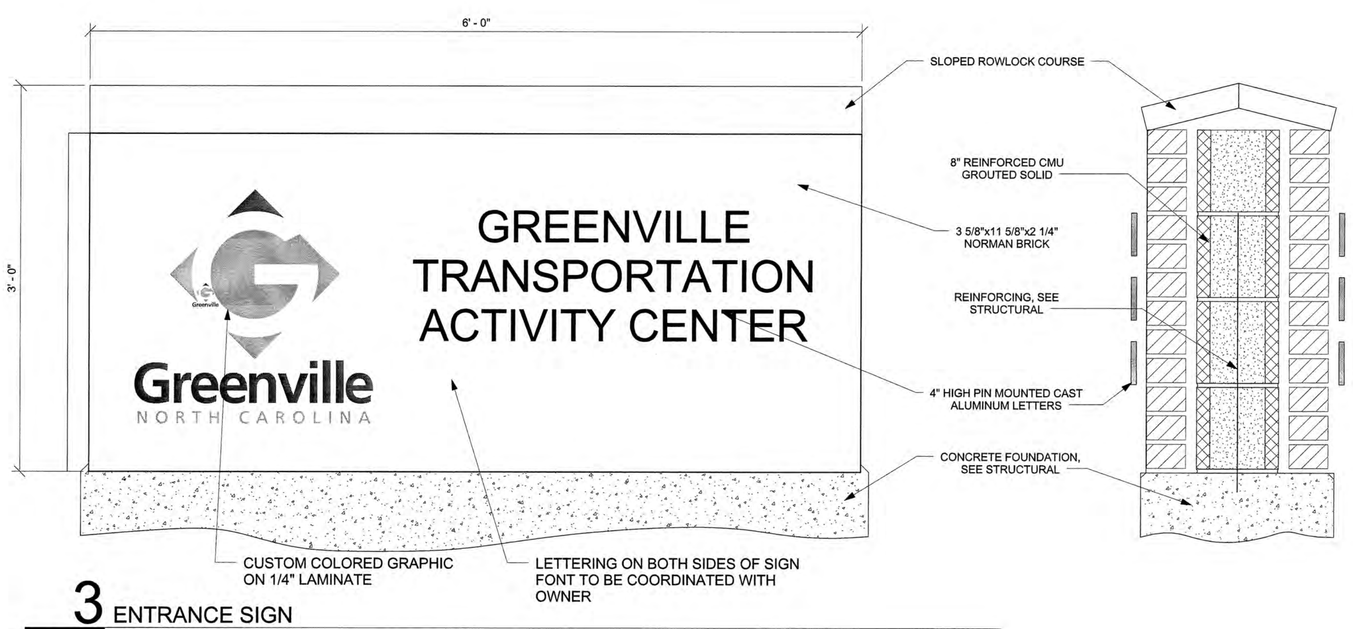

3 ENTRANCE SIGN
A-910 SCALE: 1 1/2" = 1'-0"

Greenville
NORTH CAROLINA

JACOBS
333 Fayetteville Street, Suite 1100
Raleigh, NC 27601
PH: 919-334-3100 FX: 919-334-3122 www.jacobs.com
North Carolina Engineering Firm License No. F-287
North Carolina Architectural Firm Reg. No. 50757

AYERS SAINT GROSS

Consultants:
ARK Consulting Group, PLLC

Coaly Design
Landscape Architecture + Land Planning

Seals:

JOHN A. STEVERMER REGISTERED ARCHITECT 5858 NORTH CAROLINA 05-09-16 DURHAM, N.C.

JOHN A. STEVERMER, NC LICENSE NO. 5858

General Notes:

Project Client:
CITY OF GREENVILLE

GREENVILLE
TRANSPORTATION
ACTIVITY CENTER
600 S. Pitt Street, Greenville, NC

Number	Description	Date
0	IFC	05-10-2016

Key Plan: Project North

CAD File:
Project No.: L3005900
Copyright: 2015 Jacobs Engineering Group

Drawing Sheet Title:
SIGNAGE PLANS & DETAILS

Drawing Sheet Number:
A-910

Owner's Drawing Sheet No.:

SINGLE LINE	DOUBLE LINE	DESCRIPTION
		SUPPLY AIR FLOW
		OUTSIDE AIR FLOW
		RETURN/EXHAUST AIR FLOW
		SUPPLY/OUTSIDE AIR FLOW
		RETURN AIR FLOW
		EXHAUST AIR FLOW
		RECTANGULAR SUPPLY DUCT ELBOW (UP & DN)
		RECTANGULAR RETURN DUCT ELBOW (UP & DN)
		RECTANGULAR EXHAUST DUCT ELBOW (UP & DN)
		ROUND SUPPLY DUCT ELBOW (UP & DN)
		ROUND RETURN DUCT ELBOW (UP & DN)
		ROUND EXHAUST DUCT ELBOW (UP & DN)
		FLAT OVAL SUPPLY DUCT ELBOW (UP & DN)
		FLAT OVAL RETURN DUCT ELBOW (UP & DN)
		FLAT OVAL EXHAUST DUCT ELBOW (UP & DN)
12X10	12X10	DENOTES RECTANGULAR DUCT SIZE IN INCHES (DIMENSIONS INSIDE CLEAR)
10Ø	10Ø	DENOTES ROUND DUCT SIZE IN INCHES (DIMENSIONS INSIDE CLEAR)
12X10	12X10	DENOTES FLAT OVAL DUCT SIZE IN INCHES (DIMENSIONS INSIDE CLEAR)
12X10 AL	12X10 AL	ACOUSTICAL DUCT LINING - 1" UNLESS OTHERWISE NOTED. DUCT SIZE IS INSIDE CLEAR. TYP. ROUND & FLAT OVAL
		SUPPLY AIR TERMINALS CEILING OR DUCT MOUNTED (SQUARE, RECTANGULAR, CIRCULAR & SIDEWALL W/ AIR VOLUME EXTRACTOR) CFM, SIZE & TYPE AS NOTED.
		RETURN AIR TERMINAL CFM, SIZE & TYPE AS NOTED
		EXHAUST AIR TERMINAL CFM, SIZE & TYPE AS NOTED
		SUPPLY GRILLE W/ INSIDE COLLAR
X X	X X	POINT OF CHANGE IN DUCT CONST. (BY STATIC PRESSURE CLASS)
UP	UP	DUCT RISING IN DIRECTION OF ARROW
		TRANSITION DUCT CONCENTRIC & ECCENTRIC
		REHEAT OR BOOSTER HEATING COIL IN DUCT W/ ACCESS DOORS AND DUCT TRANSITIONS
		DUCT ACCESS DOOR
SDA	SDA	SOUND ATTENUATOR
AMD	AMD	AIR FLOW MEASURING DEVICE
		FLEXIBLE CONNECTION
		FLEXIBLE DUCT
H	H	HUMIDIFIER - DUCT MOUNTED
FD	FD	FIRE DAMPER W / ACCESS DOOR
SD	SD	SMOKE DAMPER W / ACCESS DOOR

SINGLE LINE	DOUBLE LINE	DESCRIPTION
FS	FS	COMBINATION FIRE/SMOKE DAMPER W / ACCESS DOOR
		MANUAL VOLUME DAMPER
M		MOTOR OPERATED DAMPER
SD	SD	DUCT MOUNTED SMOKE DETECTOR
		SQUARE VANED ELBOW
		RADIUS TYPE ELBOW WITH OR WITHOUT VANES
		DUCT SPLIT WITH VANED ELBOW
		STRAIGHT TEE
		CONICAL TEE
		45° TEE
		DOOR UNDERCUT - SQUARE FEET SIZE AS PER PLANS
		DOOR LOUVER - SQUARE FEET SIZE AS PER PLANS
		HORIZONTAL AIR DELIVERY UNIT HEATER
		VERTICAL AIR DELIVERY UNIT HEATER
T	T	THERMOSTAT
H	H	HUMISTAT
		RISER UP
		RISER DOWN
		ELBOW - 90°
		ELBOW - 45°
		LATERAL CONNECTION
		TEE CONNECTION
		CROSS CONNECTION
		CONCENTRIC REDUCER
		ECCENTRIC REDUCER
		DIRECTION OF FLOW
		PIPE ANCHOR
		PIPE GUIDE
		UNION OR BREAK FLANGE
		BLIND FLANGE / PIPE CAP
		FLEXIBLE PIPE CONNECTOR
		EXPANSION JOINT
? ?	? ?	SECTION OR DETAIL IDENTIFICATION
		FLOW DEVICE PITOT TUBE - TYPE
		VAV BOX
		PHOENIX VAV BOX

SINGLE LINE	DESCRIPTION
	SHUT-OFF VALVE - (SEE SPEC'S FOR TYPE)
	BALANCING VALVE - (SEE SPEC'S FOR TYPE)
	CHECK VALVE - (SEE SPEC'S FOR TYPE)
	COMBINATION SHUT-OFF, CHECK & BALANCING VALVE - (SEE SPEC'S FOR TYPE)
	SHUT-OFF VALVE W/ HOSE END - (SEE SPEC'S FOR TYPE)
	LOCK SHIELD SHUT-OFF VALVE - (SEE SPEC'S FOR TYPE)
	ANGLE SHUT-OFF VALVE - (SEE SPEC'S FOR TYPE)
	ANGLE BALANCING VALVE - (SEE SPEC'S FOR TYPE)
	SAFETY/RELIEF VALVE
	SUCTION DIFFUSER
	SHUT-OFF & BALANCE VALVE W/ PRESSURE TAPS
	MEASURING DEVICE - VENTURI TYPE
	FLOW DEVICE - FIXED ORIFICE W/ PRESSURE TAPS
	SOLENOID VALVE
	2-WAY CONTROL VALVE
	PRESSURE REDUCING VALVE
	PRESSURE REGULATING VALVE
	BACK PRESSURE CONTROL VALVE
	3-WAY CONTROL VALVE
OS & Y (CHO)	OS&Y VALVE - (CHAIN OPERATOR)
P	PRESSURE GAUGE W/ GAUGE COCK-(SEE SPEC'S FOR RANGE)
T	THERMOMETER-DIAL - (SEE SPEC'S FOR RANGE)
T	THERMOMETER-STEM - (SEE SPEC'S FOR RANGE)
T	THERMOMETER TEST WELL
P	PRESSURE TEST FITTING
PT	COMBINATION PRESSURE/TEMPERATURE TEST WELL
	PUMP OR FAN
T	STEAM TRAP ASSEMBLY - THERMOSTATIC
	BASKET STRAINER
	"Y" TYPE STRAINER (W/HOSE END VALVE)
	MANUAL AIR VENT
A	AUTOMATIC AIR VENT
T	THERMOSTATIC AIR VENT
VB	VACUUM BREAKER
X X	EQUIPMENT IDENTIFICATION
	POINT OF DEMOLITION
	POINT OF CONNECTION
	FLOOR GRILLE SUPPLY DIFFUSER

NOTE- NOT ALL SYMBOLS APPEAR ON DRAWINGS

Greenville
NORTH CAROLINA

JACOBS

333 Fayetteville Street, Suite 1100
Raleigh, NC 27601
PH: 919-334-3100 FX: 919-334-3122 www.jacobs.com
North Carolina Engineering Firm License No. F-287
North Carolina Architectural Firm Reg. No. 50757

AYERS SAINT GROSS

Consultants:

ARK Consulting Group, PLLC

Coaly Design
Landscape Architecture + Land Planning

Seals:

NORTH CAROLINA PROFESSIONAL SEAL 24042 ENGINEER ROBERT H. UNGER 5/19/16

General Notes:

Project Client:
Owner

GREENVILLE TRANSPORTATION ACTIVITY CENTER
600 S. Pitt Street, Greenville, NC

Number	Description	Date
0	IFC	05.10.2016

Key Plan:

Project North

CAD File:
Project No.: L3005900
Copyright: 2015 Jacobs Engineering Group

Drawing Sheet Title:

MECHANICAL SYMBOLS

Drawing Sheet Number:

M-001

Owner's Drawing Sheet No.:

ABBREVIATIONS

A	
A	COMPRESSED AIR
AC	AIR CONDITIONING/AIR CURTAIN
AC-( )	AIR COMPRESSOR- (TYPE)
ACC	AIR COOLED CONDENSER
AHU	AIR HANDLING UNIT
AD	ACCESS DOOR
AD-( )	AREA DRAIN-(TYPE)
AFF	ABOVE FINISHED FLOOR
AMD	AIR FLOW MEASURING DEVICE
AP	ACCESS PANEL
APPROX	APPROXIMATE
AR	ACID RESISTANT
ARCH	ARCHITECTURAL
AS	ATOMIZING STEAM
ASSY	ASSEMBLY
ATMOS V	ATMOSPHERIC VENT
AVD	AUTOMATIC VOLUME DAMPER
AVG	AVERAGE
B	
BC	BRANCE CIRCUIT
BFF	BELOW FINISHED FLOOR
BFG	BELOW FINISH GRADE
BF	BOOSTER FAN
BFP- ( )	BACK FLOW PREVENTER- (TYPE)
BHP	BRAKE HORSEPOWER
BKR	BREAKER
BLDG	BUILDING
BLR	BOILER
BOD	BOTTOM OF DUCT
BOP	BOTTOM OF PIPE
BOT	BOTTOM
BP	BOOSTER PUMP
BPD	BY-PASS DAMPER
BR	BRINE RETURN
BS	BRINE SUPPLY
BTUH	BRITISH THERMAL UNITS PER HOUR
BO	BLOWOFF
C	
℄	CENTER LINE
C	CONDENSATE - (COOLING COIL)
CR	CONDENSATE RETURN - PSIG
CAV	CONSTANT AIR VOLUME
CC	COOLING COIL
CD	CEILING DIFFUSER
CFM	CUBIC FEET PER MINUTE
CF	CEILING FAN
CHO	CHAIN OPERATOR
CHW	CHILLED WATER
CHWR	CHILLED WATER RETURN
CHWS	CHILLED WATER SUPPLY
CI	CAST IRON
CLG	CEILING
CLS	CLINICAL SINK
CLT	CROSS LAMINATED TIMBER
CPP-( )	CONSTANT PRESSURE PUMP-( )
CW	CONDENSER WATER
CWR	CONDENSER WATER RETURN
CWS	CONDENSER WATER SUPPLY
CO	CLEANOUT
COL	COLUMN
COMB	COMBINATION
COMPR	COMPRESSOR
CONC	CONCRETE
CONN	CONNECTION/CONNECT
CBN	CONTINUOUS BLOWDOWN
CONT	CONTINUOUS/CONTINUED/ CONTINUATION
CONTR	CONTRACTOR
CORR	CORRIDOR
COX	CARBON DIOXIDE
CRN	CONDENSATE RETURN UNIT
CS	CUP SINK
CU	CONDENSING UNIT
CUH	CABINET UNIT HEATER
CVB	CONSTANT VOLUME BOX
D	
DB	DRY BULB
DCH	DRY CHEMICAL
DCW	DOMESTIC COLD WATER
DDC	DIRECT DIGITAL CONTROL
DESS	DELUGE SPRINKLER SYSTEM
DET	DETAIL
DF	DRINKING FOUNTAIN
DHW	DOMESTIC HOT WATER
DIA/Ø	DIAMETER
DIW	DEIONIZED WATER
DIWR	DEIONIZED WATER RETURN
DIWS	DEIONIZED WATER SUPPLY
DN	DOWN
DR	DRAIN
DSP	DRY STANDPIPE
DSS	DRY SPRINKLER SYSTEM
DW	DISTILLED WATER
DWG	DRAWING
DWR	DISTILLED WATER RETURN
DWS	DISTILLED WATER SUPPLY
DWV	DRAINAGE-WASTE-VENT
E	
EA	EXHAUST AIR
EAD	EXHAUST AIR DAMPER
EAT	ENTERING AIR TEMPERATURE
EC	ELECTRICAL CONTRACTOR
EEW	EMERGENCY EYE WASH
EF	EXHAUST FAN
EJ	EXPANSION JOINT
ELECT	ELECTRICAL
EL	ELEVATION
ELEV	ELEVATOR
EMCS	ENERGY MONITORING CONTROL SYSTEM
EP	ELECTRIC-PNEUMATIC
EQUIP	EQUIPMENT
ERV	ENERGY RECOVERY VENTILATOR
ESP	EXTERNAL STATIC PRESSURE
EWC	ELECTRIC WATER COOLER
EWT	ENTERING WATER TEMPERATURE
EX	EXHAUST
EXIST/(E)	EXISTING
EXP	EXPANSION
F	
F	FAHRENHEIT/FIRE MAIN
FA	FIRST AID HOSE SYSTEM
FAI	FAIL AS IS/FRESH AIR INLET
FCO	FLOOR CLEANOUT
FCU	FAN COIL UNIT
FD	FIRE DAMPER/FLOOR DRAIN
FDC	FIRE DEPARTMENT CONNECTION
FDN	FOUNDATION
FD-( )	FLOOR DRAIN- (TYPE)
FE	FIRE EXTINGUISHER
FEC	FIRE EXTINGUISHER CABINET
FH	FUME HOOD
FHC	FIRE HOSE CABINET
FHR	FIRE HOSE RACK
FHV	FIRE HOSE VALVE
FLEX	FLEXIBLE
FLG	FLANGED
FLR	FLOOR
FOM	FOAM SYSTEM
FP	FIRE PUMP
FPM	FEET PER MINUTE
FPS	FEET PER SECOND
FS	FLOW SWITCH
FT	FEET/FOOT OR FLOAT & THERMOSTATIC
FTR	FIN TUBE RADIATION
FU	FIXTURE UNIT
FV	FLUSH VALVE
G	
G	GAS (NATURAL)
GA	GAUGE
GAL	GALLON
GC	GENERAL CONTRACTOR
GEN	GENERAL
GH- ( )	GROUND HYDRANT- (TYPE)
GI- ( )	GREASE INTERCEPTOR- (TYPE)
GPH	GALLONS PER HOUR
GPHR	GLYCOL PREHEAT RETURN
GPHS	GLYCOL PREHEAT SUPPLY
GPM	GALLONS PER MINUTE
GR	GRILLE
GRAV	GRAVITY
H	
H	HUMIDISTAT, HUMIDIFIER OR HEIGHT
HA	HALON
HB- ( )	HOSE BIBB- (TYPE)
HC	HEATING COIL
HD	HEAD
HL	HUMIDITY HIGH LIMIT
HOA	HAND-OFF AUTOMATIC SELECTOR SWITCH W/PILOT LIGHT
HORIZ	HORIZONTAL
H/O	HAND-OFF SELECTOR SWITCH
H/O PL	HAND-OFF SELECTOR SWITCH W/PILOT LIGHT
HP	HORSEPOWER
HR	HOUR
HS	HUMIDITY SENSOR/HOSE STATION
HT	HEIGHT/HUMIDITY TRANSDUCER
HTX	HEAT EXCHANGER
HUM	HUMIDITY
HVAC	HEATING, VENTILATING, AIR CONDITIONING
HV	HEATING AND VENTILATING
HW	HOT WATER
HWS	HOT WATER SUPPLY
HWR	HOT WATER RETURN
HWRP- ( )	HOT WATER RETURN PUMP- (TYPE)
HWG- ( )	HOT WATER GENERATOR- (TYPE)
HZ	HERTZ
I	
ID	INSIDE DIAMETER
IEER	INTEGRATED ENERGY EFFICIENCY RATIO
INSUL	INSULATION
INV	INVERT
INV EL	INVERT ELEVATION
IN HG	INCHES MERCURY
IN WG	INCHES WATER GAUGE
IVD	INLET VANE DAMPER
IW	INDIRECT WASTE
K	
KW	KILOWATT
M	
M	MAIN AIR
MAX	MAXIMUM
MBH	1000 BTU PER HOUR
MC	MECHANICAL CONTRACTOR
MCC	MOTOR CONTROL CENTER
MECH	MECHANICAL
MFG	MANUFACTURER
MIN	MINIMUM
MOD	MOTOR OPERATED DAMPER
MR	MOP RECEPTOR
MTR	MOTOR
MVD	MANUAL VOLUME DAMPER
N	
NC	NORMALLY CLOSED
NFWH- ( )	NON-FREEZE WALL HYDRANT- (TYPE)
NIC	NOT IN CONTRACT
NO	NORMALLY OPEN
NTS	NOT TO SCALE
O	
O	OXYGEN
OA	OUTSIDE AIR
OAD	OUTSIDE AIR DAMPER
OAI	OUTSIDE AIR INTAKE
OBD	OPPOSED BLADE DAMPER
OD	OUTSIDE DIAMETER
OPNG	OPENING
OI- ( )	OIL INTERCEPTOR- ( )
OS&Y	OUTSIDE SCREW & YOKE
P	
PC	PUMPED CONDENSATE
PC AVD	PRESSURE CONTROL AUTOMATIC VOLUME DAMPER
PD	PRESSURE DIFFERENTIAL
PHC	PREHEAT COIL
PH	PHASE
PIV	POST INDICATOR VALVE
PNEU	PNEUMATIC
PRESS	PRESSURE
PRD	PRESSURE REDUCING DEVICE
PRV	PRESSURE REDUCING/ REGULATING VALVE
PSF	POUNDS PER SQUARE FOOT
PSI	POUNDS PER SQUARE INCH
PSIG	POUNDS PER SQUARE INCH GAUGE
PSS	PRE-ACTION SPRINKLER SYSTEM
PVC	POLYVINYL CHLORIDE
R	
RA	RETURN AIR
RAD	RETURN AIR DAMPER
RF	RETURN FAN
RDL	ROOF DRAIN LEADER
RELA	RELIEF AIR
RELD	RELIEF DAMPER
REQ'D	REQUIRED
REV	REVISION
RG	RETURN GRILLE
RH	RELATIVE HUMIDITY
RHC	REHEAT COIL
RL	REFRIGERANT-LIQUID
RM	ROOM
RO	ROOF OPENING
RPM	REVOLUTIONS PER MINUTE
RS	REFRIGERANT-SUCTION
RV	REFRIGERANT-VENT
RWC	RAIN WATER CONDUCTOR
RW	RAW WATER
S	
S-___	STEAM - PSIG
SA	SUPPLY AIR
SAF SHR	SAFETY SHOWER
SAN	SANITARY
SA- ( )	SHOCK ABSORBER- (TYPE)
SCHW	SECONDARY CHILLED WATER
SCHWP	SECONDARY CHILLED WATER PUMP
SCHWS	SECONDARY CHILLED WATER SUPPLY
SCHWR	SECONDARY CHILLED WATER RETURN
SD	SMOKE DETECTOR, SMOKE DAMPER OR SUPPLY DIFFUSER
SED	SEWAGE EJECTOR DISCHARGE
SECT	SECTION
SEER	SEASONAL ENERGY EFFICIENCY RATIO
SFN	SUPPLY FAN
SHR	SHOWER
SHT	SHEET
SK	SINK
SP	SET POINT/STATIC PRESSURE
SPD	SUMP PUMP DISCHARGE
SPLD	SPLITTER DAMPER
SPEC	SPECIFICATION
SQ.FT. ⏍	SQUARE FOOT
SR	SUPPLY REGISTER
SRV	SAFETY RELIEF VALVE/VENT
SS	STAINLESS STEEL/SERVICE SINK
STL	STEEL
ST STL	STAINLESS STEEL
SPKR	SPRINKLER
SW	SOLVENT WASTE/SOFT WATER
SYS	SYSTEM
L	
LAV	LAVATORY
LBS	POUNDS
LAT	LEAVING AIR TEMPERATURE
T	
T	THERMOSTAT/TEMPERATURE SENSOR
TCHW	TERTIARY CHILLED WATER
TCHWP	TERTIARY CHILLED WATER PUMP
TCHWS	TERTIARY CHILLED WATER SUPPLY
TCHWR	TERTIARY CHILLED WATER RETURN
TEMP	TEMPERATURE
THERM	THERMOMETER
TMU- ( )	TEMPERATURE MIXING VALVE- (TYPE)
TOD	TOP OF DUCT
TOP	TOP OF PIPE
TOS	TOP OF STEEL
TSP	TOTAL STATIC PRESSURE
TS	TAMPER SWITCH
TYP	TYPICAL
U	
U/C	UNDERCUT
UH	UNIT HEATER
UNO	UNLESS NOTED OTHERWISE
UR	URINAL
USPW	USP PURIFIED WATER
V	
V	VENT/VOLT
VA	VALVE
VAC	VACUUM
VAC BR	VACUUM BREAKER
VAV	VARIABLE AIR VOLUME
VERT	VERTICAL
VFD	VARIABLE FREQUENCY DRIVE
VP- ( )	VACUUM PUMP- (TYPE)
VRV/VRF	VARAIBLE REFRIGERANT VOLUME/FLOW
VTR	VENT THROUGH ROOF
W	
W	WIDTH/WASTE
W/	WITH
W/O	WITHOUT
WB	WET BULB
WC	WATER COLUMN/WATER CLOSET
WCO	WALL CLEANOUT
WFS	WATER FLOW SWITCH
WH- ( )	WALL HYDRANT- (TYPE)
WS	WATER STOP
WSP	WET STANDPIPE
WSS	WET SPRINKLER SYSTEM
WTS	WATER SOFTNER - (TYPE)
Y	
YH	YARD HYDRANT
Z	
ZS	END SWITCH

LINE DESIGNATIONS

——A——	COMPRESSED AIR
——CA——	CLEAN COMPRESSED AIR
——G——	GAS (NATURAL)
——VAC——	VACUUM
——CHWS——	CHILLED WATER SUPPLY
——CHWR——	CHILLED WATER RETURN
——SCHWS——	SECONDARY CHILLED WATER SUPPLY
——SCHWR——	SECONDARY CHILLED WATER RETURN
——TCHWS——	TERTIARY CHILLED WATER SUPPLY
——TCHWR——	TERTIARY CHILLED WATER RETURN
——CWS——	CONDENSER WATER SUPPLY
——CWR——	CONDENSER WATER RETURN
——DIWS——	DEIONIZED WATER SUPPLY
——DIWR——	DEIONIZED WATER RETURN
——DSLS——	DISTILLED WATER SUPPLY
——DSLR——	DISTILLED WATER RETURN
——HWS——	HOT WATER SUPPLY (HEATING)
——HWR——	HOT WATER RETURN (HEATING)
——RL——	REFRIGERANT - LIQUID
——RS——	REFRIGERANT - SUCTION
——RD——	REFRIGERANT - COMPRESSOR DISCHARGE
——RV——	REFRIGERANT - VENT
——S-15——	STEAM - PSIG
——C-15——	CONDENSATE RETURN - PSIG
——PC-25——	PUMPED CONDENSATE - PSIG
——ATMOS V——	ATMOSPHERIC VENT
——SRV——	SAFETY RELIEF VENT
——IW——	INDIRECT WASTE
——SPD——	SUMP PUMP DISCHARGE
——SED——	SEWAGE EJECTOR DISCHARGE
——DCW——	DOMESTIC COLD WATER
——DHW——	DOMESTIC HOT WATER
——DHWR——	DOMESTIC HOT WATER RETURN
——CDRW——	CHILLED DRINKING WATER
——V——	VENT (SANITARY/WASTE)
——FAI——	FRESH AIR INLET
——DESS——	DELUGE SPRINKLER SYSTEM
——DSP——	DRY STANDPIPE SYSTEM
——DSS——	DRY SPRINKLER SYSTEM
——PSS——	PRE-ACTION SPRINKLER SYSTEM
——F——	UNDERGROUND FIRE MAIN
——FA——	FIRST AID HOSE SYSTEM
——WSP——	WET SPRINKLER PIPE
——DCH——	DRY CHEMICAL
——FOM——	FOAM SYSTEM
——HA——	HALON
——DEE——	DIESEL ENGINE EXHAUST
——FOS——	FUEL OIL SUPPLY
——FOR——	FUEL OIL RETURN
——RW——	RAW WATER SUPPLY
——SW——	SOFT WATER SUPPLY
——CF——	CHEMICAL FEED
——GWS——	GLYCOL/WATER SOLUTION SUPPLY
——GWR——	GLYCOL/WATER SOLUTION RETURN
——GCC——	GRAVITY CONDENSATE FROM COOLING COILS
——PCC——	PUMPED CONDENSATE FROM COOLING COILS
——AS——	ATOMIZING STEAM
——BO——	BLOWOFF
——CBD——	CONTINUOUS BLOWDOWN

GENERAL NOTES

1) PROVIDE CONDENSATE DRAIN FROM EACH AHU COOLING COIL, DUCT MOUNTED COOLING COIL AND FAN COIL UNIT TO NEAREST APPROVED RECEPTOR IN A MANNER TO AVOID A TRIPPING HAZARD. CONDENSATE DRAIN PIPING SHALL BE MINIMUM ONE AND A QUARTER INCH FOR AHU COOLINGCOILS AND THREE QUARTER INCH FOR ALL OTHER COOLING COILS, UNLESS OTHERWISE INDICATED ON DRAWING.

2) NOT ALL PIPING SUPPORTS HAVE BEEN LOCATED ON THE DRAWINGS. PROVIDE SUPPORTS AS PER SPECIFICATION.

3) PROVIDE ACCESS DOORS FOR ALL DEVICES PER SPECIFICATIONS.

4) TAPS IN DUCTWORK AND PIPING FOR FUTURE USE SHALL BE SO LOCATED THAT THEY CAN BE ACCESSED IN FUTURE WITHOUT DISMANTLING ANY EQUIPMENT, PIPING, TUBING, DUCTWORK, CABLE-TRAYS, CONDUITS, ETC.

5) SEE ARCHITECTURAL DRAWINGS FOR FIREWALL RATINGS AND LOCATIONS.

6) THE FOLLOWING DUCT PRESSURE CLASSIFICATION SHALL BE THE BASIS OF COMPLIANCE UNLESS OTHERWISE INDICATED.
- DOWN STREAM OF ALL SUPPLY BOXES,
(+) 1 IN. WG CLASS
- UPSTREAM OF ALL EXHAUST BOXES,
(-) 1 IN. WG CLASS
- ALL OTHER MISCELLANEOUS EXHAUST AND RETURN AIR DUCTWORK,
(-) 2 IN. WG CLASS
- ALL OTHER MISCELLANEOUS SUPPLY AND RELIEF DUCTWORK
(+) 2 IN. WG CLASS

7) CONSTRUCT DUCTWORK PLENUMS OF THE SAME PRESSURE CLASSIFICATIONS AS THE HIGHEST CLASS ADJACENT DUCTWORK UNLESS OTHERWISE SPECIFIED.

8) PROVIDE MANUAL VOLUME DAMPERS ON EVERY BRANCH DUCT EXCEPT RUNOUTS TO AIR TERMINAL BOXES.

9) WHEN THERMOSTATS TO BE SUPPLIED WITH THE UNIT HEATERS, CABINET UNIT HEATERS AND FAN COIL UNITS ARE NOT LOCATED ON THE DRAWINGS, PROVIDE INTEGRAL MOUNTED THERMOSTAT.

10) REFER TO ARCHITECTURAL REFLECTED CEILING PLANS FOR EXACT LOCATION OF ALL CEILING MOUNTED DEVICES.

11) NOT ALL VALVES, INSTRUMENTS AND MISCELLANEOUS PIPING COMPONENTS HAVE BEEN SHOWN ON THE PLAN DRAWINGS. PROVIDE VALVES AND INSTRUMENTS AS REQUIRED BY FLOW DIAGRAMS, DETAILS AND SPECIFICATIONS IN ADDITION TO THOSE SHOWN ON PLAN DRAWINGS.

12) CONTRACTOR SHALL PROVIDE TRANSITIONS BETWEEN ROUND AND RECTANGULAR DUCTWORK AND TERMINAL BOXES EVEN IF THESE TRANSITIONS ARE NOT SPECIFICALLY SHOWN ON THE DRAWINGS.

13) DO NOT LOCATE ANY HYDRONIC OR DRAINAGE PIPING DIRECTLY ABOVE ELECTRICAL EQUIPMENT AND PANELS (INCLUDING INSTRUMENTATION AND FIRE ALARM PANELS).

Greenville
NORTH CAROLINA

JACOBS
333 Fayetteville Street, Suite 1100
Raleigh, NC 27601
PH: 919-334-3100 FX: 919-334-3122 www.jacobs.com
North Carolina Engineering Firm License No. F-287
North Carolina Architectural Firm Reg. No. 50757

AYERS SAINT GROSS

Consultants:
ARK Consulting Group, PLLC

Coaly Design
Landscape Architecture + Land Planning

Seals:

NORTH CAROLINA PROFESSIONAL SEAL 24042 ENGINEER ROBERT H. UNGER

General Notes:

Project Client:
Owner

GREENVILLE TRANSPORTATION ACTIVITY CENTER
600 S. Pitt Street, Greenville, NC

Number	Description	Date
0	IFC	05.10.2016

Key Plan: Project North

CAD File:
Project No.: L3005900
Copyright: 2015 Jacobs Engineering Group

Drawing Sheet Title:
MECHANICAL ABBREVIATIONS

Drawing Sheet Number:
M-002

Owner's Drawing Sheet No.:

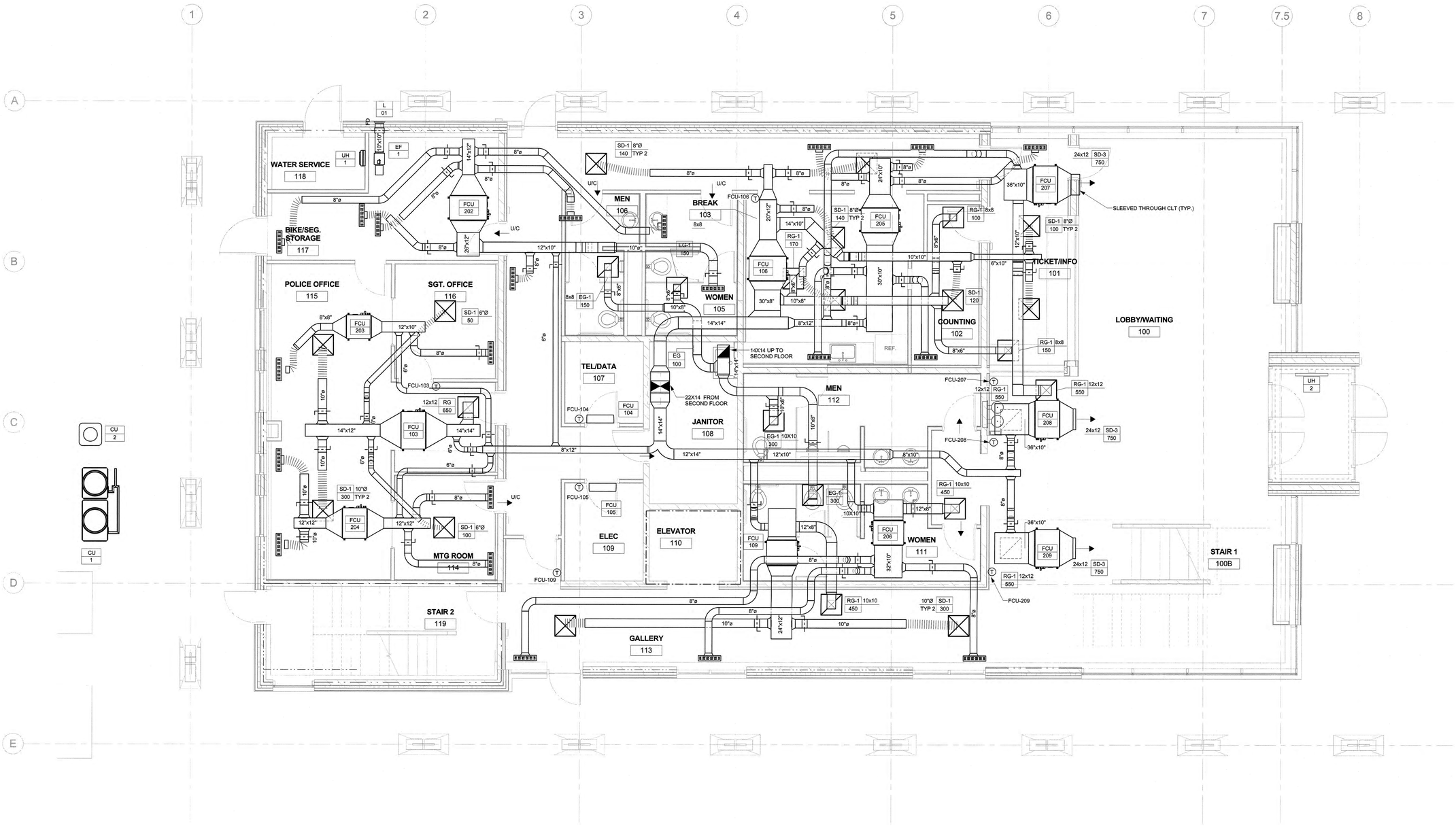

1 FIRST FLOOR MECHANICAL PLAN
1/4" = 1'-0"

FLOOR DIFFUSER ON SECOND FLOOR

FIRE RATING LEGEND

1-HR FIRE RATED WALL LINE

2-HR FIRE RATED WALL LINE

CROSS LAMINATED TIMBER

Greenville
NORTH CAROLINA

JACOBS
333 Fayetteville Street, Suite 1100
Raleigh, NC 27601
PH: 919-334-3100 FX: 919-334-3122 www.jacobs.com
North Carolina Engineering Firm License No. F-287
North Carolina Architectural Firm Reg. No. 50757

AYERS SAINT GROSS

Consultants:
ARK Consulting Group, PLLC

Coaly Design
Landscape Architecture + Land Planning

Seals:

NORTH CAROLINA PROFESSIONAL ENGINEER SEAL 24042 ROBERT H. UNGER 5/9/16

General Notes:

1. ALL PENETRATIONS OF CROSS LAMINATED TIMBER CONSTRUCTION (CLT) SHALL BE CAREFULLY PRE-COORDINATED WITH CLT SUPPLIER. MECHANICAL SUB WILL BE RESPONSIBLE FOR IDENTIFYING, CONFIRMING, AND COORDINATION OF ANY AND ALL PIPES, DUCTS, AND ASSOCIATED APPURTENANCES WELL IN ADVANCE OF ANY CONSTRUCTION.
2. ANY AND ALL ELEMENTS REQUIRED FOR A COMPLETE AND WORKING SYSTEM NECESSARY FOR MECHANICAL OPERATION THAT WILL BE WALL MOUNTED (T-STAT, SENSORS, ETC.) ON THE CLT WILL NEED TO BE COORDINATED IN AREAS WITH A CHASE BEHIND FOR POKE THROUGH PENETRATION OF CLT WALL.
3. PROVIDE MAXIMUM 10' OF FLEXIBLE DUCT TO EACH DIFFUSER WITHOUT KINKS.
4. POSITION ALL MANUAL BALANCING DAMPERS IN ACCESSIBLE LOCATIONS.
5. FAN COIL UNITS FCU-202, 203, 204, 205, 206 ARE LOCATED ABOVE THE CEILING OF THE FIRST FLOOR SERVING FLOOR DIFFUSERS ON THE SECOND FLOOR. THE DIFFUSERS ARE SHOWN ON THIS PLAN BUT NOT LABELED FOR CLARITY.

Project Client:
Owner

GREENVILLE TRANSPORTATION ACTIVITY CENTER
600 S. Pitt Street, Greenville, NC

Number	Description	Date
0	IFC	05.10.2016

Key Plan:

Project North

CAD File:

Project No.: L3005900

Copyright: 2015 Jacobs Engineering Group

Drawing Sheet Title:
MECHANICAL FIRST FLOOR PLAN

Drawing Sheet Number:
M-101

Owner's Drawing Sheet No.:

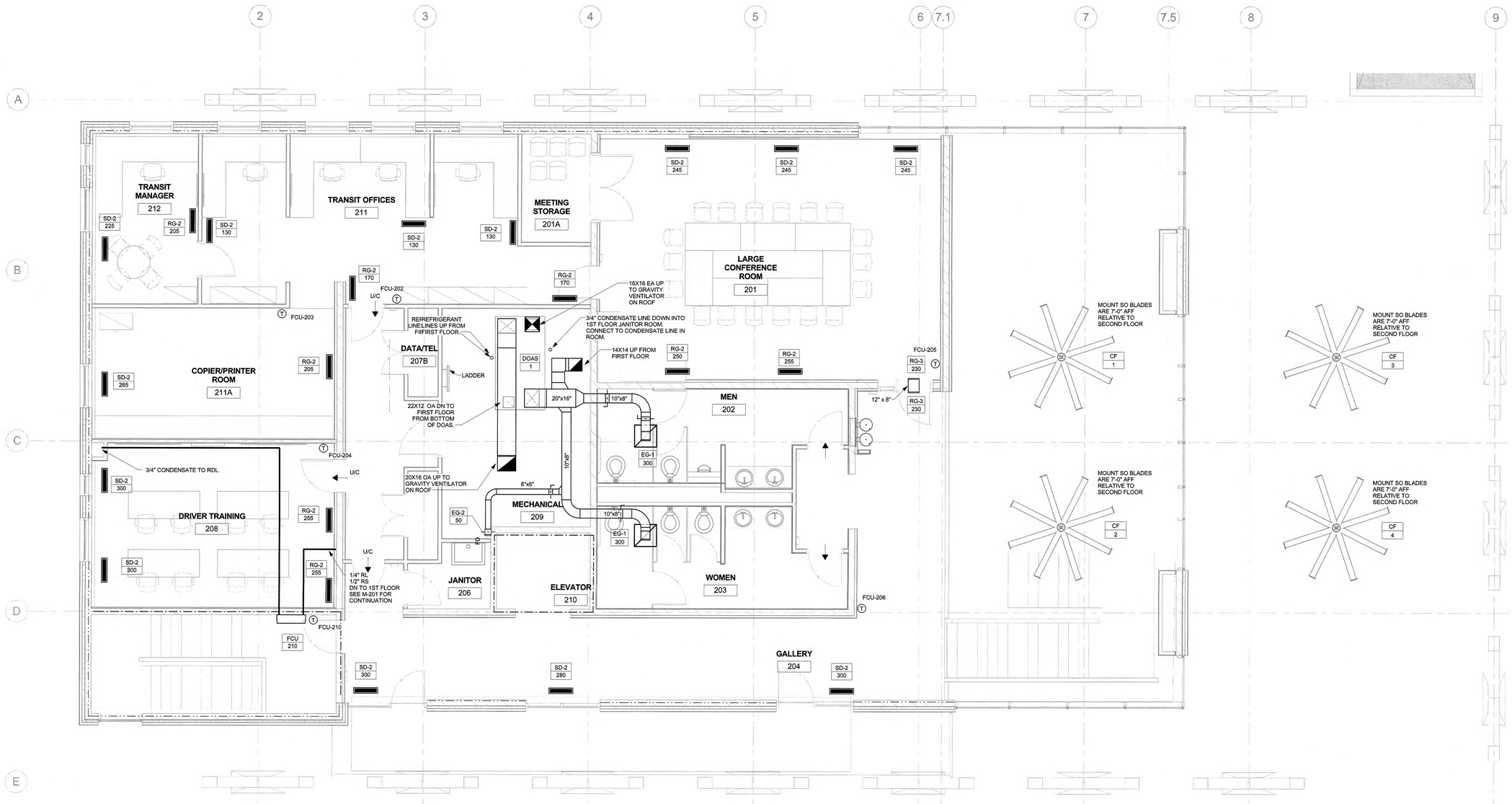

1 SECOND FLOOR MECHANICAL PLAN
1/4" = 1'-0"

Greenville
NORTH CAROLINA

JACOBS
333 Fayetteville Street, Suite 1100
Raleigh, NC 27601
PH: 919-334-3100 FX: 919-334-3122 www.jacobs.com
North Carolina Engineering Firm License No. F-287
North Carolina Architectural Firm Reg. No. 50757

AYERS SAINT GROSS

Consultants:
ARK Consulting Group, PLLC
Coaly Design
Landscape Architecture + Land Planning

Seals:

NORTH CAROLINA PROFESSIONAL SEAL 24042 ENGINEER ROBERT H. UNDER 5/11/16

General Notes:

1. ALL PENETRATIONS OF CROSS LAMINATED TIMBER CONSTRUCTION (CLT) SHALL BE CAREFULLY PRE-COORDINATED WITH CLT SUPPLIER. MECHANICAL SUB WILL BE RESPONSIBLE FOR IDENTIFYING, CONFIRMING, AND COORDINATION OF ANY AND ALL PIPES, DUCTS, AND ASSOCIATED APPURTENANCES WELL IN ADVANCE OF ANY CONSTRUCTION.
2. ANY AND ALL ELEMENTS REQUIRED FOR A COMPLETE AND WORKING SYSTEM NECESSARY FOR MECHANICAL OPERATION THAT WILL BE WALL MOUNTED (T-STAT, SENSORS, ETC.) ON THE CLT WILL NEED TO BE COORDINATED IN AREAS WITH A CHASE BEHIND FOR POKE THROUGH PENETRATION OF CLT WALL.

FIRE RATING LEGEND

1-HR FIRE RATED WALL LINE
2-HR FIRE RATED WALL LINE
CROSS LAMINATED TIMBER

Project Client:
Owner

GREENVILLE TRANSPORTATION ACTIVITY CENTER
600 S. Pitt Street, Greenville, NC

Number	Description	Date
0	IFC	05.10.2016

Key Plan:

Project North

CAD File:
Project No.: L3005900
Copyright: 2015 Jacobs Engineering Group

Drawing Sheet Title:
MECHANICAL SECOND FLOOR PLAN

Drawing Sheet Number:
M-102

Owner's Drawing Sheet No.:

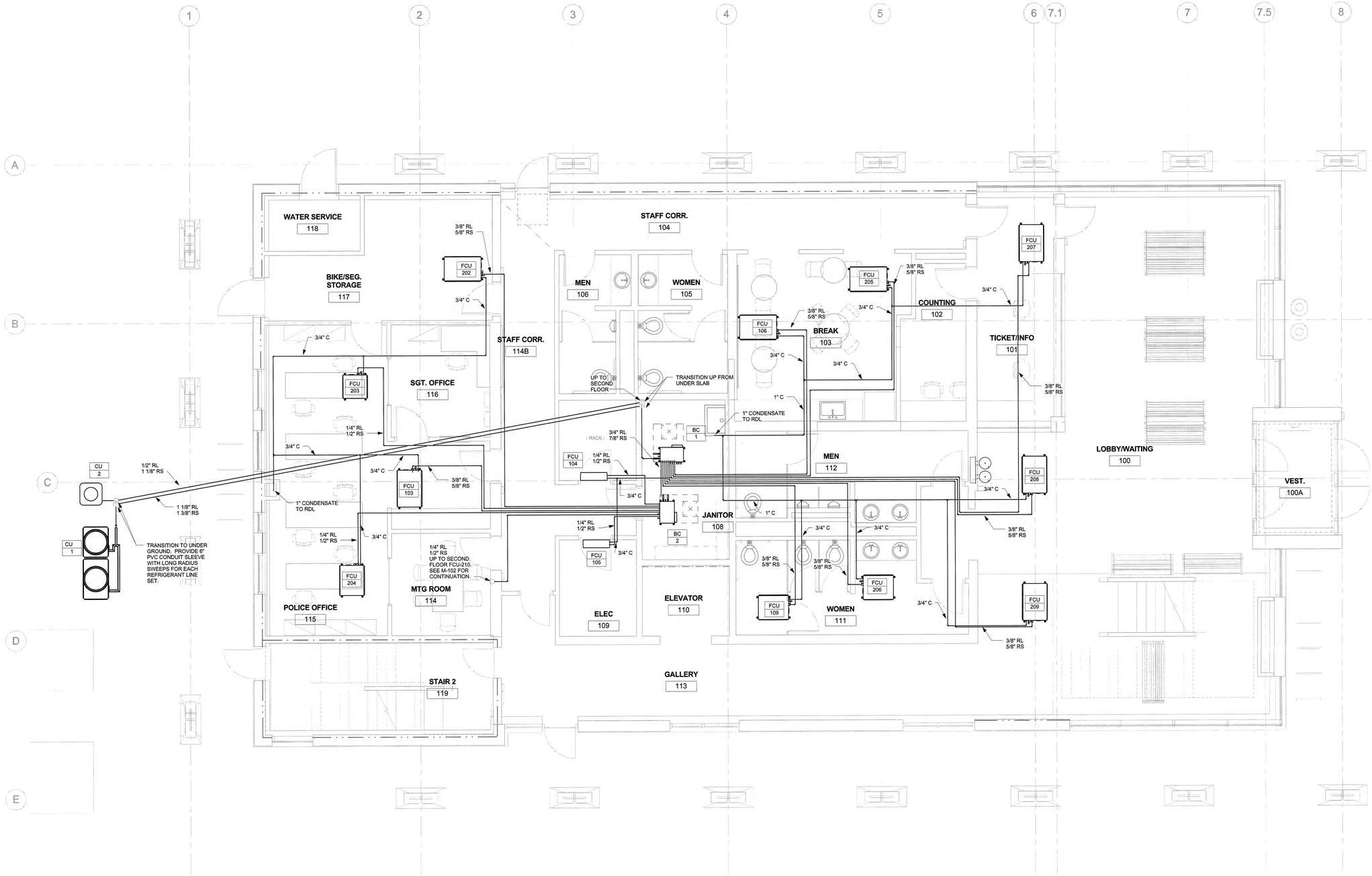

1 FIRST FLOOR MECHANICAL PIPING PLAN
1/4" = 1'-0"

FIRE RATING LEGEND

1-HR FIRE RATED WALL LINE
2-HR FIRE RATED WALL LINE
CROSS LAMINATED TIMBER

Greenville
NORTH CAROLINA

JACOBS
333 Fayetteville Street, Suite 1100
Raleigh, NC 27601
PH: 919-334-3100 FX: 919-334-3122 www.jacobs.com
North Carolina Engineering Firm License No. F-287
North Carolina Architectural Firm Reg. No. 50757

AYERS SAINT GROSS

Consultants:
ARK Consulting Group, PLLC

Coaly Design
Landscape Architecture + Land Planning

Seals:

NORTH CAROLINA PROFESSIONAL SEAL 24042 ENGINEER ROBERT H. UNGER
5/11/16

General Notes:

1. ALL PENETRATIONS OF CROSS LAMINATED TIMBER CONSTRUCTION (CLT) SHALL BE CAREFULLY PRE-COORDINATED WITH CLT SUPPLIER. MECHANICAL SUB WILL BE RESPONSIBLE FOR IDENTIFYING, CONFIRMING, AND COORDINATION OF ANY AND ALL PIPES, DUCTS, AND ASSOCIATED APPURTENANCES WELL IN ADVANCE OF ANY CONSTRUCTION. ANY AND ALL ELEMENTS REQUIRED FOR A COMPLETE AND WORKING SYSTEM NECESSARY FOR MECHANICAL OPERATION THAT WILL BE WALL MOUNTED (T-STAT, SENSORS, ETC.) ON THE CLT WILL NEED TO BE COORDINATED IN AREAS WITH A CHASE BEHIND FOR POKE THROUGH PENETRATION OF CLT WALL.
2. REFER TO 1/M-801 FOR CONNECTING CONDENSATE DRAIN TO ROOF DRAIN LEADER.
3. ALL REFRIGERANT PIPING TO BE RUN IN ACCORDANCE WITH MANUFACTURERS INSTRUCTIONS.
4. NOT ALL REFRIGERANT LINE ACCESSORIES SHOWN. PROVIDE NECESSARY REFERIGRAN LINE ACCESSORES PER MANUFACTURER'S INSTRUCTIONS.
5. ALL LINE SETS PENETRATING CLT WALLS TO BE RUN TIGHT THRU PRE CUT OPENINGS.
6.

Project Client:
Owner

GREENVILLE TRANSPORTATION ACTIVITY CENTER
600 S. Pitt Street, Greenville, NC

Number	Description	Date
0	IFC	05.10.2016

Key Plan:

Project North

CAD File:
Project No.: L3005900
Copyright: 2015 Jacobs Engineering Group

Drawing Sheet Title:
MECHANICAL FIRST FLOOR PIPING PLAN

Drawing Sheet Number:
M-201

Owner's Drawing Sheet No.:

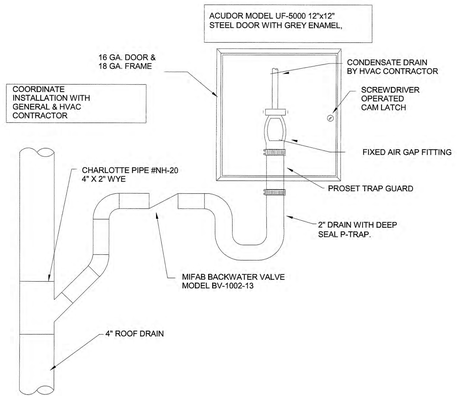

1 CONDENSATE DRAIN DETAIL
NTS

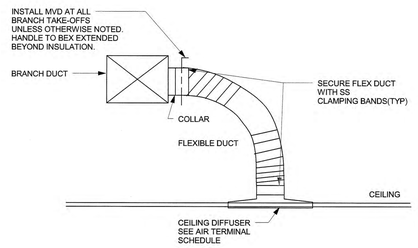

NOTE:
1. WHERE DIFFUSERS ARE LOCATED IN GYPSUM BOARD CEILING, PROVIDE MVD IN DIFFUSER NECK, ACCESSIBLE FROM THE DIFFUSER FACE, IN-LIEU-OF IN THE BRANCH TAKE-OFF.

2 CONNECTION TO SUPPLY DIFFUSER - TAP AT SIDE OF MAIN
NTS

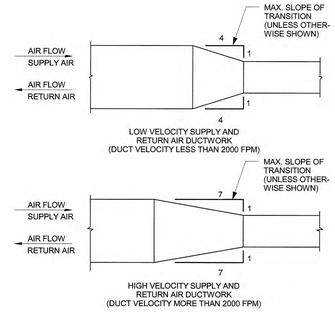

3 RECTANGULAR DUCT TRANSITION DETAIL
NTS

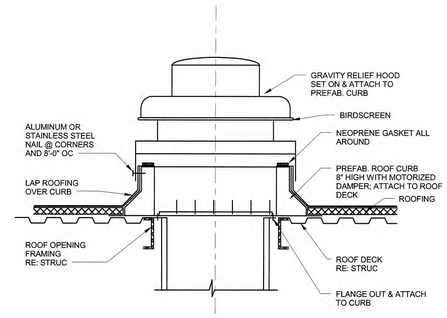

4 ROOFTOP GRAVITY RELIEF HOOD AND OUTSIDE AIR HOOD DETAIL
NTS

NOTES:

1. THIS DETAIL IS INTENDED TO PROVIDE GUIDANCE IN PROPER POSITIONING OF DUCT MOUNTED SMOKE DETECTORS. FOLLOW ANY MANUFACTURER'S INSTRUCTIONS SPECIFIC TO THE DEVICE BEING INSTALLED.
2. THIS DIMENSION MAY BE REDUCED IF IT IS PHYSICALLY IMPOSSIBLE TO OBTAIN SIX DUCT WIDTHS FROM A BEND OR OBSTRUCTION. IN SUCH CASES POSITION DETECTOR AS FAR AS POSSIBLE FROM OPENING, BENDS, OR DEFLECTION PLATES.

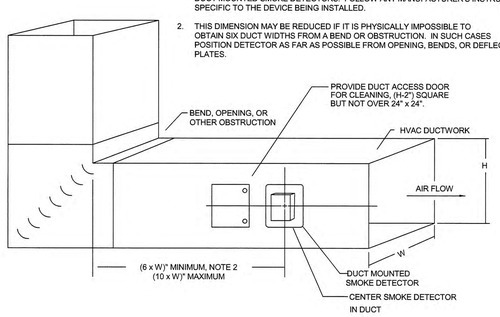

5 DUCT MOUNTED SMOKE DETECTOR LOCATION
NTS

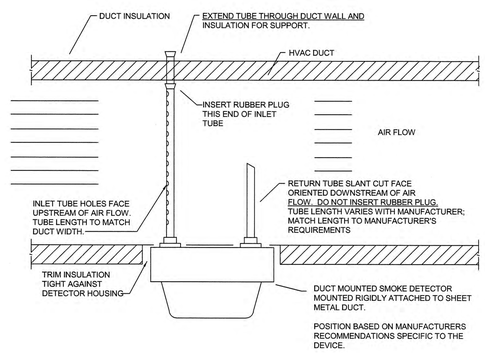

6 DUCT DETECTOR MOUNTING
NTS

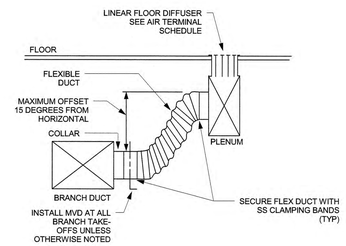

7 CONNECTION TO PLENUM FOR LINEAR FLOOR DIFFUSER
NTS

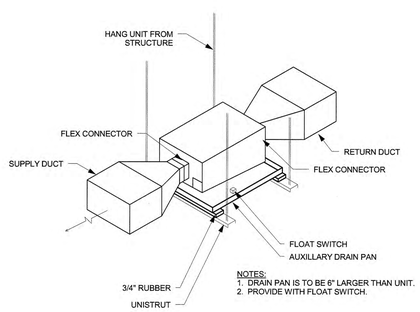

NOTES:
1. DRAIN PAN IS TO BE 6" LARGER THAN UNIT.
2. PROVIDE WITH FLOAT SWITCH.

8 FAN COIL UNIT DETAIL
NO SCALE

Greenville
NORTH CAROLINA

JACOBS
333 Fayetteville Street, Suite 1100
Raleigh, NC 27601
PH: 919-334-3100 FX: 919-334-3122 www.jacobs.com
North Carolina Engineering Firm License No. F-257
North Carolina Architectural Firm Reg. No. 50757

AYERS SAINT GROSS

Consultants:
ARK Consulting Group, PLLC

Coaly Design
Landscape Architecture + Land Planning

Seals:

NORTH CAROLINA PROFESSIONAL ENGINEER SEAL 24042 ROBERT H. UNGER 5/9/2016

General Notes:

Project Client:
Owner

GREENVILLE TRANSPORTATION ACTIVITY CENTER
600 S. Pitt Street, Greenville, NC

Number	Description	Date
0	IFC	05.10.2016

Key Plan:

Project North

CAD File:
Project No.: L3005900
Copyright: 2015 Jacobs Engineering Group

Drawing Sheet Title:
MECHANICAL DETAILS

Drawing Sheet Number:
M-801

Owner's Drawing Sheet No.:

AW

ENGINEERING JUDGMENT FIRESTOP DETAIL

PROJECT : GTAC
CONTRACTOR : JACOBS
F-RATING = 1-HR. (SEE NOTE NO. 3 BELOW)

FRONT VIEW | SECTION A-A

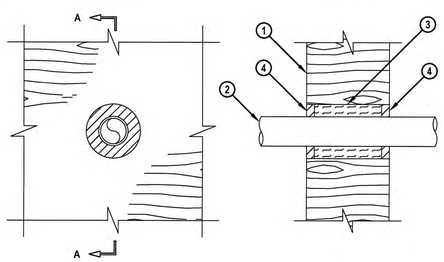

1. SOLID CROSS-LAMINATED TIMBER PANEL WALL (MINIMUM 6-2/3" THICK) AS DESCRIBED IN THE PRELIMINARY CLT FIRE RESISTANCE TESTING REPORT, PROJECT # 301006155 (1-HR. FIRE-RATING).
2. MAXIMUM 2" NOMINAL DIAMETER PVC PLASTIC PIPE (SCH 40).
3. MINERAL WOOL (MIN. 4 PCF DENSITY) TIGHTLY PACKED, RECESSED TO ACCOMMODATE SEALANT.
4. MINIMUM 5/8" DEPTH HILTI FS-ONE MAX INTUMESCENT FIRESTOP SEALANT, FLUSH WITH WALL SURFACES.

NOTES : 1. MAXIMUM DIAMETER OF OPENING = 4-3/8".
2. ANNULAR SPACE = MINIMUM 3/4", MAXIMUM 1-1/4".
3. FIRE-RATING OF ASSEMBLY IS DEPENDENT UPON THE PERFORMANCE OF WALL ASSEMBLY UNDER FIRE CONDITIONS.

THIS ENGINEERING JUDGMENT REPRESENTS A FIRESTOP SYSTEM THAT WOULD BE EXPECTED TO PASS THE STATED RATINGS IF TESTED.
(REFERENCE : UL/cUL SYSTEM NO. W-L-2474; UL SYSTEM NO. W-L-2098)

HILTI
Hilti Firestop Systems

HILTI, Inc.
Plano, Texas USA (800) 879-8000

Designed by Brett Littlefield

Sheet	1 of 1
Scale	13/64" = 1"
Date	Oct. 30, 2015
Drawing No.	220317a

Saving Lives through Innovation and Education

AW

ENGINEERING JUDGMENT FIRESTOP DETAIL

PROJECT : GTAC
CONTRACTOR : JACOBS
F-RATING = 1-HR. (SEE NOTE NO. 3 BELOW)

FRONT VIEW | SECTION A-A

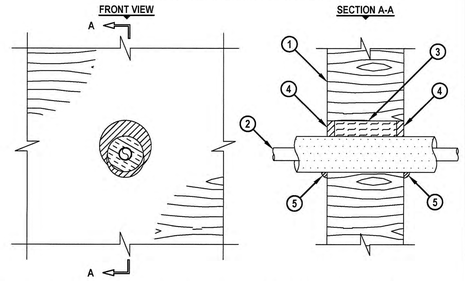

1. SOLID CROSS-LAMINATED TIMBER PANEL WALL (MINIMUM 6-2/3" THICK) AS DESCRIBED IN THE PRELIMINARY CLT FIRE RESISTANCE TESTING REPORT, PROJECT #301006155 (1-HR. FIRE-RATING).
2. MAXIMUM 1" NOMINAL DIAMETER COPPER TUBING WITH MINIMUM 1/2" THICK TO MAXIMUM 1" THICK AB/PVC PIPE INSULATION.
3. MINERAL WOOL (MIN. 4 PCF DENSITY) TIGHTLY PACKED, RECESSED TO ACCOMMODATE SEALANT.
4. MINIMUM 5/8" DEPTH HILTI FS-ONE MAX INTUMESCENT FIRESTOP SEALANT, FLUSH WITH WALL SURFACES.
5. MINIMUM 1/2" BEAD HILTI FS-ONE MAX INTUMESCENT FIRESTOP SEALANT APPLIED AT POINT OF CONTACT.

NOTES : 1. MAXIMUM DIAMETER OF OPENING = 4-1/2".
2. ANNULAR SPACE = MINIMUM 0", MAXIMUM 1-1/2".
3. FIRE-RATING OF ASSEMBLY IS DEPENDENT UPON THE PERFORMANCE OF WALL ASSEMBLY UNDER FIRE CONDITIONS.

THIS ENGINEERING JUDGMENT REPRESENTS A FIRESTOP SYSTEM THAT WOULD BE EXPECTED TO PASS THE STATED RATINGS IF TESTED.
(REFERENCE : UL/cUL SYSTEM NO. W-L-5028)

HILTI
Hilti Firestop Systems

HILTI, Inc.
Plano, Texas USA (800) 879-8000

Designed by Brett Littlefield

Sheet	1 of 1
Scale	3/16" = 1"
Date	Oct. 30, 2015
Drawing No.	220318a

Saving Lives through Innovation and Education

AW

ENGINEERING JUDGMENT FIRESTOP DETAIL

PROJECT : GTAC
CONTRACTOR : JACOBS
F-RATING = 2-HR. (SEE NOTE NO. 3 BELOW)

FRONT VIEW | SECTION A-A

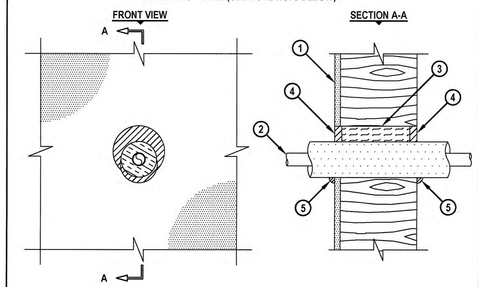

1. SOLID CROSS-LAMINATED TIMBER PANEL WALL (MINIMUM 6-2/3" THICK) AS DESCRIBED IN THE PRELIMINARY CLT FIRE RESISTANCE TESTING REPORT, PROJECT #301006155, WITH 1/2" THICK GLASS-FIBER FACED GYPSUM PANEL ATTACHED (2-HR. FIRE-RATING).
2. MAXIMUM 1" NOMINAL DIAMETER COPPER TUBING WITH MINIMUM 1/2" THICK TO MAXIMUM 1" THICK AB/PVC PIPE INSULATION.
3. MINERAL WOOL (MIN. 4 PCF DENSITY) TIGHTLY PACKED, RECESSED TO ACCOMMODATE SEALANT.
4. MINIMUM 5/8" DEPTH HILTI FS-ONE MAX INTUMESCENT FIRESTOP SEALANT, FLUSH WITH WALL SURFACES.
5. MINIMUM 1/2" BEAD HILTI FS-ONE MAX INTUMESCENT FIRESTOP SEALANT APPLIED AT POINT OF CONTACT.

NOTES : 1. MAXIMUM DIAMETER OF OPENING = 4-1/2".
2. ANNULAR SPACE = MINIMUM 0", MAXIMUM 1-1/2".
3. FIRE-RATING OF ASSEMBLY IS DEPENDENT UPON THE PERFORMANCE OF WALL ASSEMBLY UNDER FIRE CONDITIONS.

THIS ENGINEERING JUDGMENT REPRESENTS A FIRESTOP SYSTEM THAT WOULD BE EXPECTED TO PASS THE STATED RATINGS IF TESTED.
(REFERENCE : UL/cUL SYSTEM NO. W-L-5028)

HILTI
Hilti Firestop Systems

HILTI, Inc.
Plano, Texas USA (800) 879-8000

Designed by Brett Littlefield

Sheet	1 of 1
Scale	3/16" = 1"
Date	Oct. 30, 2015
Drawing No.	220320a

Saving Lives through Innovation and Education

AW

ENGINEERING JUDGMENT FIRESTOP DETAIL

PROJECT : GTAC
CONTRACTOR : JACOBS
F-RATING = 2-HR. (SEE NOTE NO. 3 BELOW)

FRONT VIEW | SECTION A-A

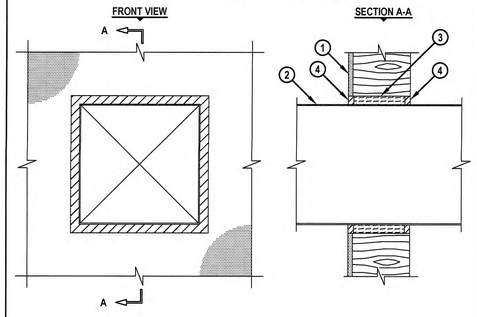

1. SOLID CROSS-LAMINATED TIMBER PANEL WALL (MINIMUM 6-2/3" THICK) AS DESCRIBED IN THE PRELIMINARY CLT FIRE RESISTANCE TESTING REPORT, PROJECT #301006155, WITH 1/2" THICK GLASS-FIBER FACED GYPSUM PANEL ATTACHED (2-HR. FIRE-RATING).
2. MAXIMUM 14" x 14" RECTANGULAR SHEET METAL DUCT (MIN. 24 GA.).
3. MINERAL WOOL (MIN. 4 PCF DENSITY) TIGHTLY PACKED, RECESSED TO ACCOMMODATE SEALANT.
4. MINIMUM 5/8" DEPTH HILTI FS-ONE MAX INTUMESCENT FIRESTOP SEALANT, FLUSH WITH WALL SURFACES.

NOTES : 1. MAXIMUM AREA OF OPENING = 202 SQ. IN. WITH A MAXIMUM DIMENSION OF 15-1/4".
2. ANNULAR SPACE = MINIMUM 1/4", MAXIMUM 3/4".
3. FIRE-RATING OF ASSEMBLY IS DEPENDENT UPON THE PERFORMANCE OF WALL ASSEMBLY UNDER FIRE CONDITIONS.

THIS ENGINEERING JUDGMENT REPRESENTS A FIRESTOP SYSTEM THAT WOULD BE EXPECTED TO PASS THE STATED RATINGS IF TESTED.
(REFERENCE : UL/cUL SYSTEM NO. W-L-7096)

HILTI
Hilti Firestop Systems

HILTI, Inc.
Plano, Texas USA (800) 879-8000

Designed by Brett Littlefield

Sheet	1 of 1
Scale	9/64" = 1"
Date	Oct. 30, 2015
Drawing No.	220322a

Saving Lives through Innovation and Education

Greenville
NORTH CAROLINA

JACOBS

333 Fayetteville Street, Suite 1100
Raleigh, NC 27601
PH: 919-334-3100 FX: 919-334-3122 www.jacobs.com
North Carolina Engineering Firm License No. F-287
North Carolina Architectural Firm Reg. No. 50757

AYERS SAINT GROSS

Consultants:

ARK Consulting Group, PLLC

Coaly Design
Landscape Architecture + Land Planning

Seals:

NORTH CAROLINA PROFESSIONAL SEAL 24042 ENGINEER ROBERT H. INGER 7/14/16

General Notes:

Project Client:
Owner

GREENVILLE
TRANSPORTATION
ACTIVITY CENTER
600 S. Pitt Street, Greenville, NC

Number	Description	Date
0	IFC	05.10.2016

Key Plan:

Project North

CAD File:

Project No.: L3005900

Copyright: 2015 Jacobs Engineering Group

Drawing Sheet Title:

MECHANICAL DETAILS

Drawing Sheet Number:

M-802

Owner's Drawing Sheet No.:

DEDICATED OUTDOOR AIR SYSTEM SCHEDULE

MARK	SUPPLY FAN			EXHAUST FAN			SUMMER				WINTER				SUMMER ENERGY RECOVERED	WINTER ENERGY RECOVERED	COOLING COIL				ELECTRICAL				BASIS OF DESIGN		REMARKS
	AIRFLOW (CFM)	SP (in wg)	HP	AIRFLOW (CFM)	SP (in wg)	HP	OA EAT °F	OA LAT °F	EA EAT °F	% EFF	OA EAT °F	OA LAT °F	EA EAT °F	% EFF	TOTAL (MBH)	TOTAL (MBH)	FINS PER INCH	ROWS	CAPACITY TOTAL (MBH)	CAPACITY SENS (MBH)	HEATER (KW)	MCA	MOCP	V/PH/HZ	MFG	MODEL	
DOAS-1	2100	1.75	2.0	1650	1.5	1.5	96/76	57.8	78	81.3	21	70.7	65	82.6	55.74	83.62	11	4	79.5	58.7	15	54	60	208/3/60	THYBAR	TV3600IF	1,2

1. CONNECT TO ARCHITECTURAL LOUVER. COORDINATE WITH ARCHITECTURAL PLANS.
2. OR EQUAL BY GREENHECK, TRANE, CARRIER

VRV HEAT RECOVERY CONDENSING UNIT SCHEDULE

MARK	TYPE	TOTAL COOLING CAPACITY (MBH)	TOTAL HEATING CAPACITY (MBH)	SUMMER AMBIENT TEMP, °F	LOW AMBIENT TEMP CONTROL, °F	MINIMUM IEER	ELECTRICAL			WEIGHT (LBS)	BASIS OF DESIGN		REMARKS
							MCA	MOCP	V/PH/HZ		MFG	MODEL	
CU-1	AIR COOLED	240	270	96.1	16	18.0	45+45	50+50	208/3/60	725+725	MITSUBISHI	PURY-P240TSLMU	1,2

1. PROVIDE WITH HEAT RECOVERY WHEEL, AIRFLOW MONITORING STATIONS IN SUPPLY AND EXHAUST AIR STREAMS.
2. OR EQUAL BY DAIKIN, TRANE, LG

CONDENSING UNIT SCHEDULE

MARK	TYPE	TOTAL COOLING CAPACITY (MBH)	SUMMER AMBIENT TEMP, °F	LOW AMBIENT TEMP CONTROL, °F	MINIMUM IEER	ELECTRICAL			WEIGHT (LBS)	BASIS OF DESIGN		REMARKS
						MCA	MOCP	V/PH/HZ		MFG	MODEL	
CU-2	AIR COOLED	90	96.1	16	12.0	36	50	208/3/60	350	TRANE	TTA090003	1

1. OR EQUAL BY CARRIER, DAIKIN, YORK

VRV FAN COIL UNIT SCHEDULE

MARK	TYPE	AREA SERVED	COOLING ENT. AIR CONDITION		NOMINAL COOLING CAPACITY (MBH)	NOMINAL HEATING CAPACITY (MBH)	AIRFLOWS			REFRIGERANT LINE SIZE		ELECTRICAL			WEIGHT (LBS)	BASIS OF DESIGN		BRANCH SELECTOR	REMARKS
			DBT °F	WBT °F			MAX SUPPLY (CFM)	BALANCE SUPPLY (CFM)	VENTILATION (CFM)	LIQUID (OD)	SUCTION (OD)	MCA	MOCP	V/PH/HZ		MFG	MODEL	DESIGNATION	
FCU-103	DUCTED CONCEALED CEILING UNIT	POLICE OFFICE - 115	76	63	27.0	30.0	880	750	140	3/8"	5/8"	2.73	15	208/1/60	70	MITSUBISHI	PEFY-P27NMAU-E3	BS-2	1,2,3
FCU-104	WALL MOUNTED UNIT	TEL/DATA - 107	76	63	8.0	9.0	400	400	--	1/4"	1/2"	0.38	15	208/1/60	50	MITSUBISHI	PKFY-P08NHMU-E2	BS-2	1,2,3
FCU-105	WALL MOUNTED UNIT	ELEC - 109	76	63	8.0	9.0	400	400	--	1/4"	1/2"	0.38	15	208/1/60	50	MITSUBISHI	PKFY-P08NHMU-E2	BS-2	1,2,3
FCU-106	DUCTED CONCEALED CEILING UNIT	COORIDOR-114B/BREAK-103/COUNT-102/TICKET-101	76	63	24.0	27.0	880	880	500	3/8"	5/8"	2.73	15	208/1/60	70	MITSUBISHI	PEFY-P24NMAU-E3	BS-1	1,2,3
FCU-109	DUCTED CONCEALED CEILING UNIT	GALLERY - 113	76	63	18.0	20.0	600	600	200	1/4"	1/2"	1.56	15	208/1/60	60	MITSUBISHI	PEFY-P18NMAU-E3	BS-1	1,2,3
FCU-202	DUCTED CONCEALED CEILING UNIT	TRANSIT OFFICE-211/MANG 212	76	63	24.0	27.0	880	615	70	3/8"	5/8"	2.73	15	208/1/60	70	MITSUBISHI	PEFY-P24NMAU-E3	BS-2	1,2,3
FCU-203	DUCTED CONCEALED CEILING UNIT	COPY/PRINT - 211A	76	63	12.0	13.5	265	265	60	1/4"	1/2"	1.56	15	208/1/60	60	MITSUBISHI	PEFY-P12NMAU-E3	BS-2	1,2,3
FCU-204	DUCTED CONCEALED CEILING UNIT	DRIVER TRAINING - 208	76	63	18.0	20.0	600	600	90	1/4"	1/2"	1.56	15	208/1/60	60	MITSUBISHI	PEFY-P18NMAU-E3	BS-2	1,2,3
FCU-205	DUCTED CONCEALED CEILING UNIT	LARGE CONFERENCE - 201	76	63	30.0	34.0	880	735	230	3/8"	5/8"	2.73	15	208/1/60	70	MITSUBISHI	PEFY-P30NMAU-E3	BS-1	1,2,3
FCU-206	DUCTED CONCEALED CEILING UNIT	GALLERY - 204	76	63	24.0	27.0	880	880	200	3/8"	5/8"	2.73	15	208/1/60	70	MITSUBISHI	PEFY-P24NMAU-E3	BS-1	1,2,3
FCU-207	DUCTED CONCEALED CEILING UNIT	LOBBY/WAITING - 100	76	63	24.0	27.0	880	750	200	3/8"	5/8"	2.73	15	208/1/60	70	MITSUBISHI	PEFY-P24NMAU-E3	BS-1	1,2,3
FCU-208	DUCTED CONCEALED CEILING UNIT	LOBBY/WAITING - 100	76	63	24.0	27.0	880	750	200	3/8"	5/8"	2.73	15	208/1/60	70	MITSUBISHI	PEFY-P24NMAU-E3	BS-1	1,2,3
FCU-209	DUCTED CONCEALED CEILING UNIT	LOBBY/WAITING - 100	76	63	24.0	27.0	880	750	200	3/8"	5/8"	2.73	15	208/1/60	70	MITSUBISHI	PEFY-P24NMAU-E3	BS-1	1,2,3
FCU-210	WALL MOUNTED UNIT	STAIR 2 - 119	76	63	8.0	9.0	400	400	--	1/4"	1/2"	0.38	15	208/1/60	50	MITSUBISHI	PKFY-P08NHMU-E2	BS-2	1,2,3

1. R-410A REFRIGERANT
2. PROVIDE WITH INTEGRAL CONDENSATE PUMP, CONDENSATE LINE CHECK VALVE
3. OR EQUAL BY DAIKIN, TRANE, LG

VRF HEAT RECOVERY BRANCH CIRCUIT CONTROLLER SCHEDULE

MARK	NUMBER OF PORTS	TYPE	CONNECTED CAPACITY TO BC (BTU/h)	ELECTRICAL			WEIGHT (LBS)	BASIS OF DESIGN		REMARKS
				MCA	MOCP	V/PH/HZ		MFG	MODEL	
BC-1	10	MAIN	275,000	.65	15	208/3/60	100	MITSUBISHI	CMB-P1010NU-HA1	1,3
BC-2	8	SUB	107,000	.65	15	208/3/60	82	MITSUBISHI	CMB-P108NU-GB	1,2,3

1. INCLUDE DIAMONDBACK BALL VALVE BV_SERIES, 700 PSIG WORKING PRESSURE, FULL PORT, R-410A RATED.
2. CONNECTED CAPACITY TO BC SHOULD NOT EXCEED 126,000 BTU/h FOR SUB BC'S
3. OR EQUAL BY DAIKIN, TRANE, LG

FAN SCHEDULE

MARK	FAN				ELECTRIC						BASIS OF DESIGN		REMARKS
	AIRFLOW (CFM)	SP (in wg)	TYPE	RPM	MOTOR (HP)	MOTOR (RPM)	AMPS	VOLT	PH	HZ	MFG	MODEL	
EF-1	150	0.375	INLINE	1050	-	-	1.7	115	1	60	GREENHECK	CSP-B150	1,4
CF-1	--	--	CIRCULATING	107	-	-	3.9	115	1	60	BIG ASS FAN	ESSENCE 10	2,3
CF-2	--	--	CIRCULATING	107	-	-	3.9	115	1	60	BIG ASS FAN	ESSENCE 10	2,3
CF-3	--	--	CIRCULATING	107	-	-	3.9	115	1	60	BIG ASS FAN	ESSENCE 10	2,3
CF-4	--	--	CIRCULATING	107	-	-	3.9	115	1	60	BIG ASS FAN	ESSENCE 10	2,3

1. CONNECT TO ARCHITECTURAL LOUVER. COORDINATE WITH ARCHITECTURAL PLANS.
2. PROVIDE WITH CONTROLLER
3. OR EQUAL BY MACROAIRE, PATTERSON
4. OR EQUAL BY TWIN CITY, LOREN COOK, CHICAGO BLOWER

LOUVER SCHEDULE

MARK	AREA SERVED	FACE AREA	FREE AREA	AIRFLOW (CFM)	VELOCITY (FPM)	WIDTH (IN)	HEIGHT (IN)	BASIS OF DESIGN		REMARKS
								MFG	MODEL	
L-01	BIKE/SEG STORAGE-117	1.5	0.8	150	188	12	18	GREENEHCK	ELF375DXH	1,2,3

1. PROVIDE WITH INSECT SCREEN, CBD4 BACKDRAFT DAMPER
2. LOUVER COLOR TO BE SELECTED BY ARCHITECT
3. OR EQUAL BY GREENHECK, POTTORFF, ARCHITECTURAL LOUVERS.

ELECTRIC UNIT HEATER SCHEDULE

MARK	AREA SERVED	CFM	EAT °F	EAT °F	MOUNTING HEIGHT	ELECTRICAL		BASIS OF DESIGN		REMARKS
						KW	V/PH/HZ	MFG	MODEL	
UH-1	SEE PLAN	160	50	90	3' A.F.F.	2	208/1/60	REZNOR	EHC	1,2
UH-2	VESTIBULE	--	50	90	BASEBOARD	.75	208/1/60	REZNOR	EBHB	1,2

1. PROVIDE WITH SURFACE MOUNTING BOX AND INTEGRAL THERMOSTAT
2. OR EQUAL BY MODINE, MARLEY, INDEECO

AIR TERMINAL SCHEDULE

MARK	AIRFLOW (CFM)	NOMINAL FACE SIZE (in)		NECKSIZE (in)			MAX PRESSURE DROP (in wg)	MAX NC	TYPE	BASIS OF DESIGN		REMARKS
		LENGTH	WIDTH	DIAMETER	LENGTH	WIDTH				MFG	MODEL	
SD-1	SEE PLAN	24	24	SEE PLAN	-	-	0.1	35	T-BAR	PRICE	SPD	1,3
SD-2	SEE PLAN	24	4	-	-	-	0.1	35	FLOOR	PRICE	LBPH-25C	2,3
SD-3	SEE PLAN	24	12	-	-	-	0.1	35	SURFACE	PRICE	520D	1,3
RG-1	SEE PLAN	24	24	SEE PLAN	-	-	0.1	35	T-BAR	PRICE	PDDR	1,3
RG-2	SEE PLAN	24	4	-	-	-	0.1	35	FLOOR	PRICE	LBPH-25C	2,3
RG-3	SEE PLAN	12	8	-	-	-	0.05	35	SURFACE	PRICE	530D	1,3
EG-1	SEE PLAN	24	24	SEE PLAN	-	-	0.1	35	T-BAR	PRICE	PDDR	1,3
EG-2	SEE PLAN	6	6	SEE PLAN	-	-	0.1	35	SURFACE	PRICE	530D	1,3

1. WHITE POWDER COAT FINISH
2. BRUSHED ALUMINUM FINSH, 25C CORE
3. OR EQUAL BY TITUS, HART AND COOLEY, METALAIRE

REFRIGERANT VOLUME CALCULATIONS

ROOM	AREA (SQFT)	CEILING HEIGHT (FT)	VOLUME (FT^3)	LBS/1000 FT^3	MAX REFRIGERANT CHARGE (LBS)
MTG ROOM/POLICE/SGT OFFICE	630	8.5	5355	25	134
COUNTING/TICKET/BREAK/CORRIDOR	978	8.5	8313	25	208
GALLERY 113/GALLERY 204/LOBBY	2122	8.5/25	18037	25	451
TRANSIT OFFICE/MANAGER	601	9	5409	25	135
DRIVER TRAINING/COPY PRINT	576	9	5184	25	130
LARGE MEETING	684	9	6156	25	154

OUTSIDE AIR CALCULATIONS

ROOM	AREA (SQFT)	CFM/PERSON	CFM/SQFT	PEOPLE/ 1000 SQFT	QA REQUIRED (CFM)	QA PROVIDED (CFM)
SGT OFFICE 117	112	5	0.06	5	10	20
MTG ROOM 114	97	5	0.06	50	30	40
POLICE OFFICE 115	440	5	0.06	5	37	80
CORRIDOR 114B	446	--	0.06	--	27	320
BREAK 103	261	5	0.06	30	55	110
COUNTING 102	100	5	0.06	5	9	30
TICKET 101	182	5	0.06	5	15	50
GALLERY 113	351	--	0.06	--	21	200
LOBBY 100	1302	5	0.06	10	143	600
TRANSIT MANAGER 212	160	5	0.06	5	14	20
TRANSIT OFFICE 211	545	5	0.06	5	46	50
DRIVER TRAINING 208	191	5	0.06	50	59	90
COPY PRINT 211A	328	5	0.06	5	28	60
LARGE CONFERENCE 201	697	5	0.06	50	216	230
GALLERY 204	613	--	0.06	--	37	200

Greenville
NORTH CAROLINA

JACOBS

333 Fayetteville Street, Suite 1100
Raleigh, NC 27601
PH: 919-334-3100 FX: 919-334-3122 www.jacobs.com
North Carolina Engineering Firm License No. F-287
North Carolina Architectural Firm Reg. No. 50757

AYERS SAINT GROSS

Consultants:

ARK Consulting Group, PLLC

Coaly Design
Landscape Architecture + Land Planning

Seals:

NORTH CAROLINA PROFESSIONAL SEAL 24042 ENGINEER ROBERT H. UNGER 11/16/16

General Notes:

Project Client:
Owner

GREENVILLE TRANSPORTATION ACTIVITY CENTER
600 S. Pitt Street, Greenville, NC

Number	Description	Date
0	IFC	05.10.2016

Key Plan:

Project North

CAD File:

Project No.: L3005900

Copyright: 2015 Jacobs Engineering Group

Drawing Sheet Title:

MECHANICAL SCHEDULES

Drawing Sheet Number:

M-901

Owner's Drawing Sheet No.:

ABBREVIATIONS

A	
ABV	ABOVE
AD	AIR DRYER
AD-X	AREA DRAIN
AFF	ABOVE FINISHED FLOOR
AFS	AUTOMATIC FLUSH SYSTEM
AP	ACCESS PANEL
APPL	APPLICABLE
APPROX	APPROXIMATE
ARCH	ARCHITECTURAL
AVG	AVERAGE
B	
BAS	BUILDING AUTOMATION SYSTEM
BCA	BOTTLED COMPRESSED AIR
BFP-X	BACKFLOW PREVENTOR
BLDG	BUILDING
BLW	BELOW
BOP	BOTTOM OF PIPE
BOT	BOTTOM
BTU	BRITISH THERMAL UNIT
BWV	BACKWATER VALVE
C	
CL	CENTER LINE
°C	DEGREES CENTIGRADE
CA	COMPRESSED AIR
CAF	COMPRESSED AIR FILTER
CAP	CAPACITY
CAR	COMPRESSED AIR RECEIVER
CBV	CIRCUIT BALANCING VALVE
CI	CAST IRON
CIP	CLEAN IN PLACE
CLG	CEILING
CO	CLEANOUT
COG	CLEANOUT ON GRADE
COL	COLUMN
CONC	CONCRETE
CONN	CONNECTION
CONT'D	CONTINUATION
CONTR	CONTRACTOR
CORR	CORRIDOR
CPP-X	CONSTANT PRESSURE PUMP
CS	CUP SINK
D	
DCW	DOMESTIC COLD WATER
DEG	DEGREE
DET	DETAIL
DFU	DRAINAGE FIXTURE UNIT
DHW	DOMESTIC HOT WATER
DHWR	DOMESTIC HOT WATER RETURN
DIA	DIAMETER
DISCH	DISCHARGE
DIV	DIVISION
DIW	DOWN IN WALL
DN	DOWN
DWG	DRAWING
DWV	DRAINAGE, WASTE & VENT
E	
(E)	EXISTING
EA	EACH
EL	ELEVATION
ELEC	ELECTRICAL
ENT	ENTERING
EP	ELEVATOR PUMP
EQ	EQUAL
EQUIP	EQUIPMENT
EQUIV	EQUIVALENT
ET	EXPANSION TANK
ETC	AND SO FORTH
EW	EYEWASH
EWT	ENTERING WATER TEMPERATURE
EWC	ELECTRIC WATER COOLER
EXP	EXPANSION
EXT	EXTERNAL
EWH	ELECTRIC WATER HEATER
F	
F	FILTER
°F	DEGREES FAHRENHEIT
FA	FROM ABOVE
FAI	FRESH AIR INLET
FB	FROM BELOW
FCO	FLOOR CLEANOUT
FD	FLOOR DRAIN
FH	FUME HOOD
FI	FILTER
FIN	FINISHED
FLG	FLANGE
FLEX	FLEXIBLE
FLR	FLOOR
FPM	FEET PER MINUTE
FR	FROM
FT	FEET
FU	FIXTURE UNIT
FV	FLUSH VALVE

G	
GA	GAUGE
GAL	GALLON
GALV	GALVANIZED
GC	GENERAL CONTRACTOR
GCO	GROUND CLEANOUT
GF	GROUND FLOOR
GEN	GENERAL
GH-X	GROUND HYDRANT
H	
HB-X	HOSE BIBB
HCV	HOUSECLEANING VACUUM SYSTEM
HD	HEAD
HP	HORSE POWER
HORIZ	HORIZONTAL
HR	HOUR
HS	HOSE STATION
HT	HEIGHT
HWRP	HOT WATER RETURN PUMP
I	
IA	INSTRUMENT AIR
ID	INTERNAL DIAMETER
IE	INVERT ELEVATION
INCL	INCLUDING
INV EL	INVERT ELEVATION
IW	INDIRECT WASTE
IWH	INSTANTANEOUS WATER HEATER
L	
LAV	LAVATORY
LB	POUND
LCO2	LIQUID CARBON DIOXIDE
LCW	LAB COLD WATER
LHW	LAB HOT WATER
LHWR	LAB HOT WATER RETURN
LIQ	LIQUID
LS	LOCK SHIELD
LVG	LEAVING
M	
M	METER
M	METERING EQUIPMENT
MAX	MAXIMUM
MCC	MECHANICAL CONTROL CENTER
MECH	MECHANICAL
MFR	MANUFACTURER
MH	MANHOLE
MIN	MINIMUM
MISC	MISCELLANEOUS
MR	MOP RECEPTOR
MTD	MOUNTED
MV	MIXING VALVE
N	
NC	NORMAL CLOSED
NEG	NEGATIVE
NFGH-X	NON-FREEZE GROUND HYDRANT
NFWH-X	NON-FREEZE WALL HYDRANT
NIC	NOT IN CONTRACT
No	NUMBER
NO	NORMALLY OPEN
NPW	NON-POTABLE WATER
NTS	NOT TO SCALE
NOM	NOMINAL
O	
OD	OUTSIDE DIAMETER
OPG	OPENING
ORD	OVERFLOW ROOF DRAIN
ORDL	OVERFLOW ROOF DRAIN LEADER
OS	OPEN SITE DRAIN
OS&Y	OUTSIDE SCREW & YOKE
P	
P/LW	PUMPED LAB WASTE
P/SAN	PUMPED SANITARY WASTE
PC	PUMPED CONDENSATE
PG	PROPANE GAS
PH	PHASE
PI	PRESSURE INDICATOR
PP	PUMP
PRESS	PRESSURE
PRV	PRESSURE REDUCING VALVE
PS	PRESSURE SWITCH
PT	PRESSURE TRANSMITTER
PV	PROCESS VENT
PVC	POLYVINYL CHLORIDE

Q	
QC	QUICK CONNECT COUPLING
QTY	QUANTITY
QD	QUICK DISCONNECT
R	
RAC	RUN ABOVE CEILING
RAF	RUN ABOVE FLOOR
RBC	RUN BELOW CEILING
RBF	RUN BELOW FLOOR
RD	ROOF DRAIN
REF	REFERENCE
REQD	REQUIRED
REV	REVISION
RIC	RUN IN CHASE
RICW	RUN IN CASEWORK
RM	ROOM
RPM	REVOLUTIONS PER MINUTE
RPZ	REDUCED PRINCIPLE ZONE
RWC	RAIN WATER CONDUCTOR
S	
S/SHO	SAFETY SHOWER
SS/EW	SAFETY SHOWER/EYE WASH
SA-X	SHOCK ABSORBER
SAN	SANITARY
SE	SEWAGE EJECTOR
SH	SHOWER
SK	SINK
SOP	STANDARD OPERATING PROCEDURE
SP	SEWAGE PUMP
SPEC	SPECIFICATION
SRV	SAFETY RELIEF VALVE
SS	STAINLESS STEEL
S	STORM
STL	STEEL
STR	STRUCTURAL
SWH	STEAM WATER HEATER
SYS	SYSTEM
T	
TA	TANK
TD	TRENCH DRAIN
TDH	TOTAL DYNAMIC HEAD
TEMP	TEMPERATURE
THERM	THERMOMETER
TI	TEMPERATURE INDICATOR
TP	TRAP PRIMER (TP-1, TP-2)
T&P	TEMPERATURE & PRESSURE RELIEF
TW	TEMPERED WATER
TWR	TEMPERED WATER RETURN
TWS	TEMPERED WATER SUPPLY
TYP	TYPICAL
U	
UNO	UNLESS OTHERWISE NOTED
UR	URINAL
V	
V	SANITARY VENT
VA	VALVE
VERT	VERTICAL
VTR	VENT THRU ROOF
W	
W	WASTE
W/	WITH
W/O	WITHOUT
WC	WATER CLOSET
WCO	WALL CLEAN OUT
WF	WATER FILTER
WFU	WATER FIXTURE UNIT
WH-X	WALL HYDRANT
WM	WATER METER
WS	WATER SOFTENER
WT	WIDTH

SYMBOLS

SINGLE LINE	DESCRIPTION
X X OR X X OR X X	EQUIPMENT IDENTIFICATION
SECT. OR DET. NO. X X DWG. NO.	SECTION OR DETAIL IDENTIFICATION
	SHUT-OFF VALVE - (SEE SPEC FOR TYPE)
	BALANCING VALVE (SEE SPEC FOR TYPE)
	GAS COCK
	CHECK VALVE - (SEE SPEC FOR TYPE)
	DIAPHRAGM VALVE
	LOCK SHIELD SHUT-OFF VALVE (SEE SPEC FOR TYPE)
	ANGLE SHUT-OFF VALVE - (SEE SPEC FOR TYPE)
	SAFETY/RELIEF VALVE
	SOLENOID VALVE
	2-WAY CONTROL VALVE
	PRESSURE REDUCING VALVE
	PRESSURE REGULATING VALVE
	BALANCING COCK
	3-WAY CONTROL VALVE
P	PRESSURE GAUGE W/ GAUGE COCK (SEE SPEC FOR RANGE)
T	THERMOMETER-STEM - (SEE SPEC FOR RANGE)
	PUMP
T	STEAM TRAP ASSEMBLY
VB	VACUUM BREAKER
WH	WALL HYDRANT
AFH	ANTI-FREEZE HYDRANT
HB	HOSE BIBB
SA-X	WATERHAMMER ARRESTER (TYPE AS NOTED)
PITCH	PITCH DOWN IN DIRECTION OF ARROW
	FLOOR SINK
	FLOOR DRAIN
	HEAT TRACING
	P-TRAP
WCO	BASE STACK WALL CLEANOUT - STORM OR WASTE
CO	BASE STACK CLEANOUT - STORM OR WASTE
FCO	FLOOR CLEANOUT-STORM OR WASTE
FCO	FCO - IN LINE - STORM AND WASTES
	CLEANOUT
	PIPE ANCHOR
	PIPE GUIDE
	UNION OR BREAK FLANGE
	BLIND FLANGE/PIPE CAP
	FLEXIBLE PIPE CONNECTOR
EJ	EXPANSION JOINT
	WALL HYDRANT
	BACKFLOW PREVENTER REDUCED PRESSURE TYPE
	BACKFLOW PREVENTER DOUBLE CHECK VALVE TYPE
	DOMESTIC WATER METER ASSEMBLY
	CONNECTION POINT BETWEEN NEW AND EXISTING
W	WATER METER

NOTE: NOT ALL SYMBOLS APPEAR ON DRAWINGS

GENERAL NOTES:

1. ALL WORK TO BE PERFORMED, DESIGNED, AND INSTALLED IN ACCORDANCE WITH ALL REFERENCED CODES, STANDARDS, AND REGULATIONS.
2. CONTRACTOR SHALL FURNISH ALL LABOR, EQUIPMENT, AND MATERIALS AS REQUIRED TO PROVIDE A COMPLETE INSTALLATION.
3. PLANS INDICATE GENERAL ARRANGEMENT ONLY. REFER TO ARCHITECTURAL, HVAC AND ALL ASSOCIATED CONTRACT DRAWINGS FOR ACTUAL SPACE AVAILABLE. MODIFICATIONS TO ACTUAL SPACE AND OTHER TRADES ARE PART OF THIS CONTRACT.
4. CONTRACTOR SHALL COORDINATE THE INSTALLATION OF ALL PIPING, DRAINS, AND CLEANOUTS WITH ALL TRADES AND DRAWINGS PRIOR TO COMMENCING INSTALLATION. NO ADDITIONAL COST TO THE OWNER WILL BE ALLOWED IF ATTRIBUTED TO A FAILURE TO COORDINATE.
5. PLUMBING CONTRACTOR SHALL REFER TO ARCHITECTURAL DRAWINGS FOR EXACT LOCATION OF SINKS AND FIXTURES.
6. ALL PIPING INCLUDING WATER, SANITARY, AND VENT INDICATED ON THE PLANS SHALL BE LOCATED ABOVE FINISHED CEILING, IN CHASES, SHAFTS, OR WALL CAVITIES UNLESS SHOWN OR NOTED OTHERWISE.
7. ALL AND STORM, SANITARY WASTE PIPING 4" AND LARGER SHALL SLOPE 1 PERCENT MINIMUM ALL STORM, SANITARY, AND WASTE PIPING 3" AND LESS SHALL SLOPE 2 PERCENT MINIMUM UNLESS OTHERWISE NOTED.
8. ALL VENTS THAT CONNECT TO HORIZONTAL DRAINAGE PIPES SHALL HAVE ITS INVERT TAKEN OFF ABOVE THE DRAINAGE CENTER LINE. ALL VENT PIPING SHALL HAVE A POSITIVE SLOPE TOWARDS THE DRAINS THAT THEY SERVE.
9. RISER DIAGRAMS SHALL BE USED PRIMARILY FOR THE SIZING OF PIPING AND NOT NECESSARILY FOR PIPING ARRANGEMENT.
10. CONTRACTOR SHALL PROVIDE AND INSTALL DIELECTRIC UNIONS WHEN CONNECTING PIPING AND/OR EQUIPMENT OF DISSIMILAR MATERIALS.
11. ALL DIMENSIONS, ELEVATIONS, AND EXISTING CONDITIONS SHALL BE CHECKED AND VERIFIED BY CONTRACTOR AT THE SITE BEFORE PROCEEDING WITH WORK
12. VALVES, SHOCK ABSORBERS, AND TRAP PRIMERS ARE TO BE LOCATED IN ACCESSIBLE LOCATION, OR PROVIDED WITH AN ACCESS PANEL. LOCATIONS OF ANY ACCESS PANELS ARE TO BE COORDINATED WITH ARCHITECTURAL AND INTERIOR DRAWINGS AND VERIFIED BY CONTRACTOR AT THE SITE BEFORE PROCEEDING WITH WORK
13. A CLEANOUT SHALL BE PROVIDED AT THE BASE OF EACH SANITARY WASTE STACK, RAINWATER CONDUCTOR AND EXTERIOR CAST IRON STORM BOOTS.
14. ALL DRAINAGE, SOIL, WASTE, VENT AND STORM PIPING SHALL BE RUN AND INSTALLED USING 45 DEGREE OFFSET FITTINGS FOR CONNETIONS OR CHANGE OF DIRECTIONS.
15. PROVIDE ALL NECESSARY TEMPORARY OR PERMANENT CAPS OR PLUGS FOR PIPING. DO NOT LEAVE PIPING OPEN ENDED.
16. CLEAN THE JOB SITE DAILY AND REMOVE FROM THE PREMISES ANY DIRT AND DEBRIS CAUSED BY THE PERFORMANCE OF WORK INCLUDED IN THIS CONTRACT.
17. DO NOT LOCATE ANY HYDRONIC OR DRAINAGE PIPING DIRECTLY ABOVE ELECTRICAL EQUIPMENT AND PANLES (INCLUDING INSTRUMENTATION AND FIRE ALARM PANELS
18. COORDINATE ALL VENTS THROUGH THE ROOF WITH DUCT WORK.
19. PROVIDE CHROME PLATED ESCUTCHEONS ON FINISHED SIDES WHERE EXPOSED PIPING PENETRATES ALL FINISHED SPACES AND ROOMS.
20. REFER TO AND COORDINATE FINISH ROOM SCHEDULE FOR FLOORING TYPES BEFORE INSTALLING CLEANOUTS AND FLOOR DRAINS.
21. REFER TO P-800 SERIES DRAWINGS FOR ALL DETAILS AND P-900 SERIES FOR PLUMBING SCHEDULES.

PLUMBING LOAD SUMMARY

SYSTEM(S)	LOAD(S)	MAIN SIZE
DOMESTIC WATER	182 DFU	2 1/2"
SANITARY SEWER	115 DFU	4"

LINE DESIGNATIONS

CW / CW	DOMESTIC COLD WATER
HW / HW	DOMESTIC HOT WATER
HWR / HWR	DOMESTIC HOT WATER RETURN
	VENT
	WASTE
(E)X / (E)X	EXISTING PIPING SERVICES
G / G	NATURAL GAS PIPING

Greenville NORTH CAROLINA

JACOBS

333 Fayetteville Street, Suite 1100
Raleigh, NC 27601
PH: 919-334-3100 FX: 919-334-3122 www.jacobs.com
North Carolina Engineering Firm License No. F-287
North Carolina Architectural Firm Reg. No. 50757

AYERS SAINT GROSS

Consultants:

ARK Consulting Group, PLLC

Coaly Design
Landscape Architecture + Land Planning

Seals:

NORTH CAROLINA PROFESSIONAL 24042 ENGINEER ROBERT H. UNGER

General Notes:

Project Client:
Owner

GREENVILLE TRANSPORTATION ACTIVITY CENTER
600 S. Pitt Street, Greenville, NC

Number	Description	Date
0	IFC	05.10.2016

Key Plan: Project North

CAD File:
Project No.: L3005900
Copyright: 2015 Jacobs Engineering Group

Drawing Sheet Title:

PLUMBING SYMBOLS, ABBREVIATIONS & GENERAL NOTES

Drawing Sheet Number:

P-001

Owner's Drawing Sheet No.:

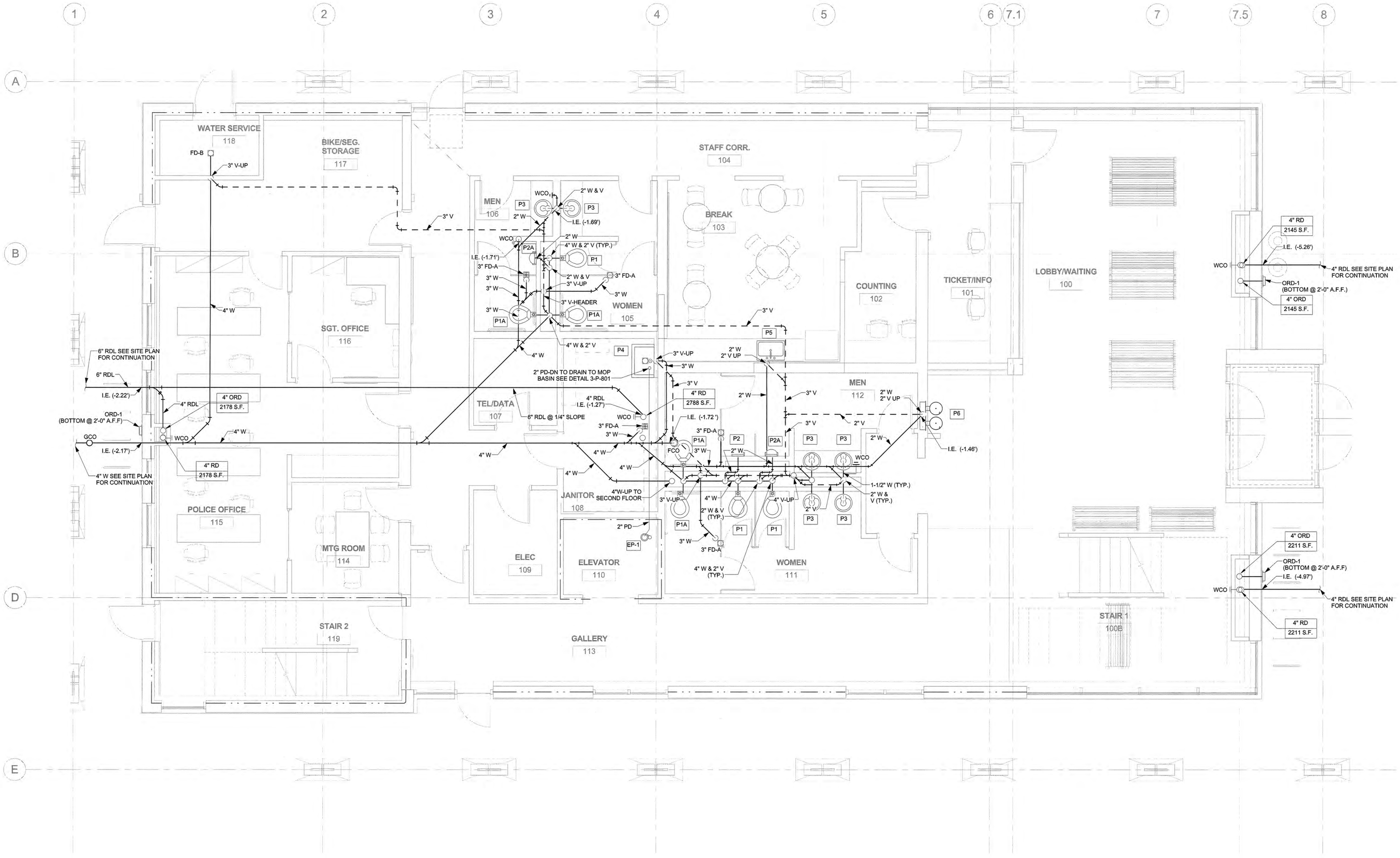

1 FIRST FLOOR WASTE AND VENT PLAN
1/4" = 1'-0"

Greenville
NORTH CAROLINA

JACOBS
333 Fayetteville Street, Suite 1100
Raleigh, NC 27601
PH: 919-334-3100 FX: 919-334-3122 www.jacobs.com
North Carolina Engineering Firm License No. F-287
North Carolina Architectural Firm Reg. No. 50757

AYERS SAINT GROSS

Consultants:
ARK Consulting Group, PLLC

Coaly Design
Landscape Architecture + Land Planning

Seals:

NORTH CAROLINA PROFESSIONAL SEAL 24042 ENGINEER ROBERT H. LINGER

General Notes:

1. ALL WASTE (SANITARY), RDL (STORM), DRAIN PIPING IS LOCATED BELOW SLAB, BELOW FLOOR, IN CHASES, OR WITHIN WALLS, UNLESS NOTED OTHERWISE.
2. ALL DOMESTIC WATER & VENT PIPING IS LOCATED ABOVE CEILING, IN CHASES, OR WITHIN WALLS, UNLESS NOTED OTHERWISE.
3. ALL PENETRATIONS OF CROSS LAMINATED TIMBER CONSTRUCTION (CLT) SHALL BE CAREFULLY PRE-COORDINATED WITH CLT SUPPLIER. MECHANICAL SUB WILL BE RESPONSIBLE FOR IDENTIFYING, CONFIRMING, AND COORDINATION OF ANY AND ALL PIPES, DUCTS, AND ASSOCIATED APPURTENANCES WELL IN ADVANCE OF ANY CONSTRUCTION.

FIRE RATING LEGEND

1-HR FIRE RATED WALL LINE
2-HR FIRE RATED WALL LINE
CROSS LAMINATED TIMBER

Project Client:
Owner

GREENVILLE TRANSPORTATION ACTIVITY CENTER
600 S. Pitt Street, Greenville, NC

Number	Description	Date
0	IFC	05.10.2016

Key Plan:

Project North

CAD File:
Project No.: L3005900
Copyright: 2015 Jacobs Engineering Group

Drawing Sheet Title:
PLUMBING WASTE FIRST FLOOR PLAN

Drawing Sheet Number:
P-101

Owner's Drawing Sheet No.:

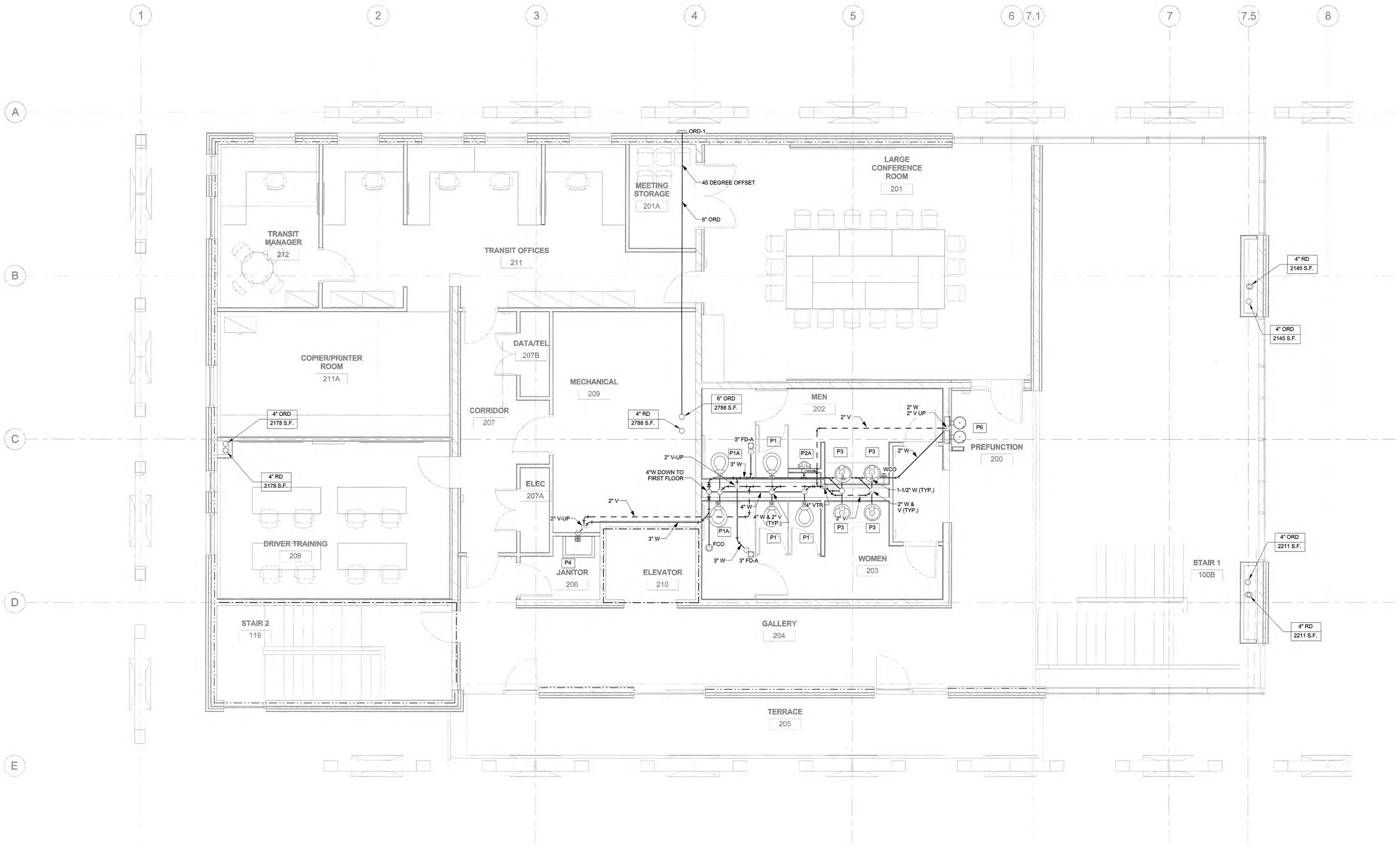

1 SECOND FLOOR WASTE AND VENT PLAN
1/4" = 1'-0"

Greenville
NORTH CAROLINA

JACOBS
333 Fayetteville Street, Suite 1100
Raleigh, NC 27601
PH: 919-334-3100 FX: 919-334-3122 www.jacobs.com
North Carolina Engineering Firm License No. F-287
North Carolina Architectural Firm Reg. No. 50757

AYERS SAINT GROSS

Consultants:
ARK Consulting Group, PLLC

Coaly Design
Landscape Architecture + Land Planning

Seals:

NORTH CAROLINA PROFESSIONAL SEAL 24042 ENGINEER ROBERT J. LINDER

General Notes:

1. ALL WASTE (SANITARY), RDL (STORM), DRAIN PIPING IS LOCATED BELOW SLAB, BELOW FLOOR, IN CHASES, OR WITHIN WALLS, UNLESS NOTED OTHERWISE.
2. ALL DOMESTIC WATER & VENT PIPING IS LOCATED ABOVE CEILING, IN CHASES, OR WITHIN WALLS, UNLESS NOTED OTHERWISE.
3. ALL PENETRATIONS OF CROSS LAMINATED TIMBER CONSTRUCTION (CLT) SHALL BE CAREFULLY PRE-COORDINATED WITH CLT SUPPLIER. MECHANICAL SUB WILL BE RESPONSIBLE FOR IDENTIFYING, CONFIRMING, AND COORDINATION OF ANY AND ALL PIPES, DUCTS, AND ASSOCIATED APPURTENANCES WELL IN ADVANCE OF ANY CONSTRUCTION.

FIRE RATING LEGEND

1-HR FIRE RATED WALL LINE
2-HR FIRE RATED WALL LINE
CROSS LAMINATED TIMBER

Project Client:
Owner

GREENVILLE TRANSPORTATION ACTIVITY CENTER
600 S. Pitt Street, Greenville, NC

Number	Description	Date
0	IFC	05.10.2016

Key Plan:

Project North

CAD File:
Project No.: L3005900
Copyright: 2015 Jacobs Engineering Group

Drawing Sheet Title:
PLUMBING WASTE SECOND FLOOR PLAN

Drawing Sheet Number:
P-102

Owner's Drawing Sheet No.:

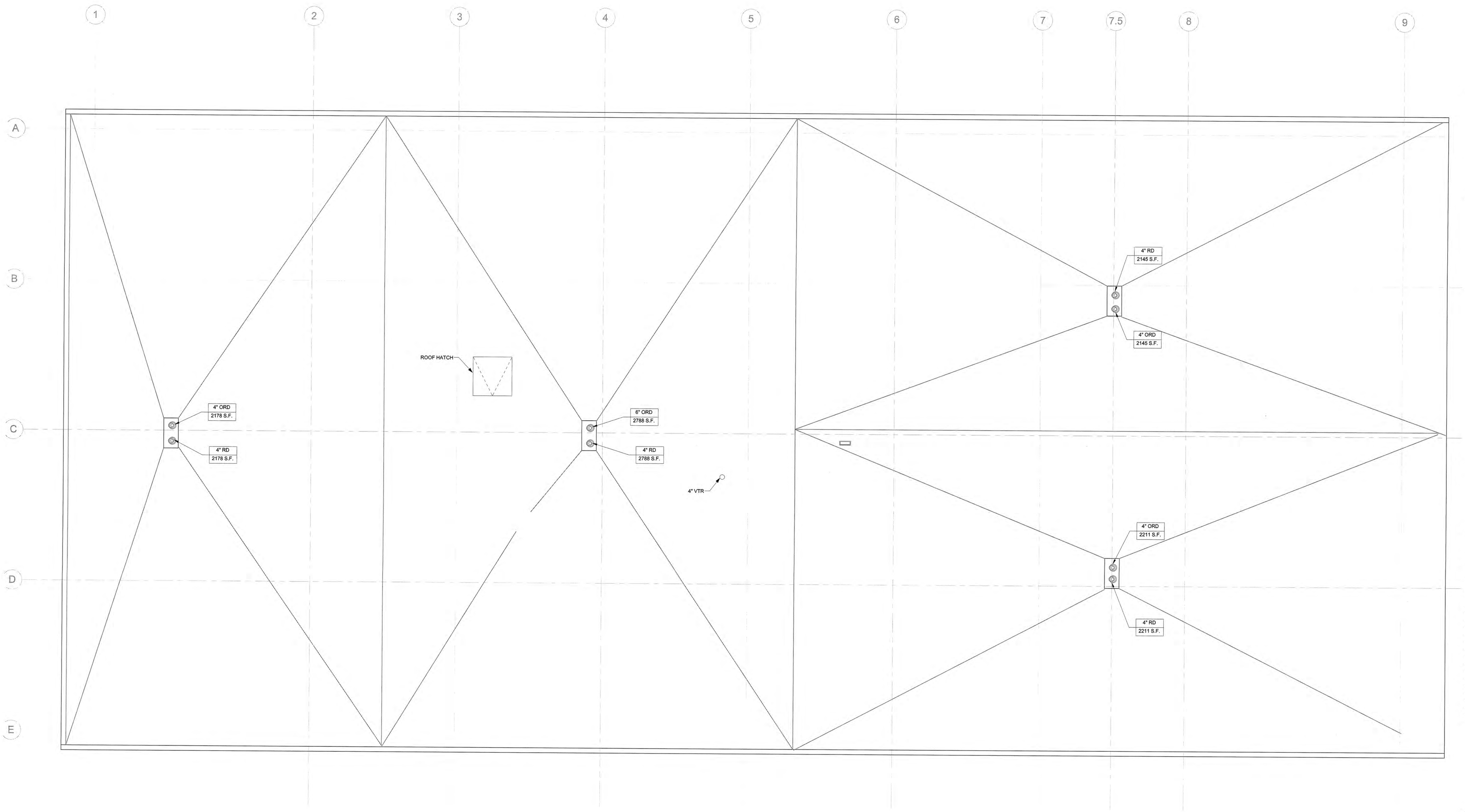

1 ROOF PLUMBING PLAN
1/4" = 1'-0"

Greenville
NORTH CAROLINA

JACOBS
333 Fayetteville Street, Suite 1100
Raleigh, NC 27601
PH: 919-334-3100 FX: 919-334-3122 www.jacobs.com
North Carolina Engineering Firm License No. F-287
North Carolina Architectural Firm Reg. No. 50757

AYERS SAINT GROSS

Consultants:
ARK Consulting Group, PLLC

Coaly Design
Landscape Architecture + Land Planning

Seals:

NORTH CAROLINA PROFESSIONAL ENGINEER 24042 ROBERT H. UNGER JR.
5/11/16

General Notes:

Project Client:
Owner

GREENVILLE
TRANSPORTATION
ACTIVITY CENTER
600 S. Pitt Street, Greenville, NC

Number	Description	Date
0	IFC	05.10.2016

Key Plan:

Project North

CAD File:
Project No.: L3005900
Copyright: 2015 Jacobs Engineering Group

Drawing Sheet Title:
PLUMBING ROOF PLAN

Drawing Sheet Number:
P-103

Owner's Drawing Sheet No.:

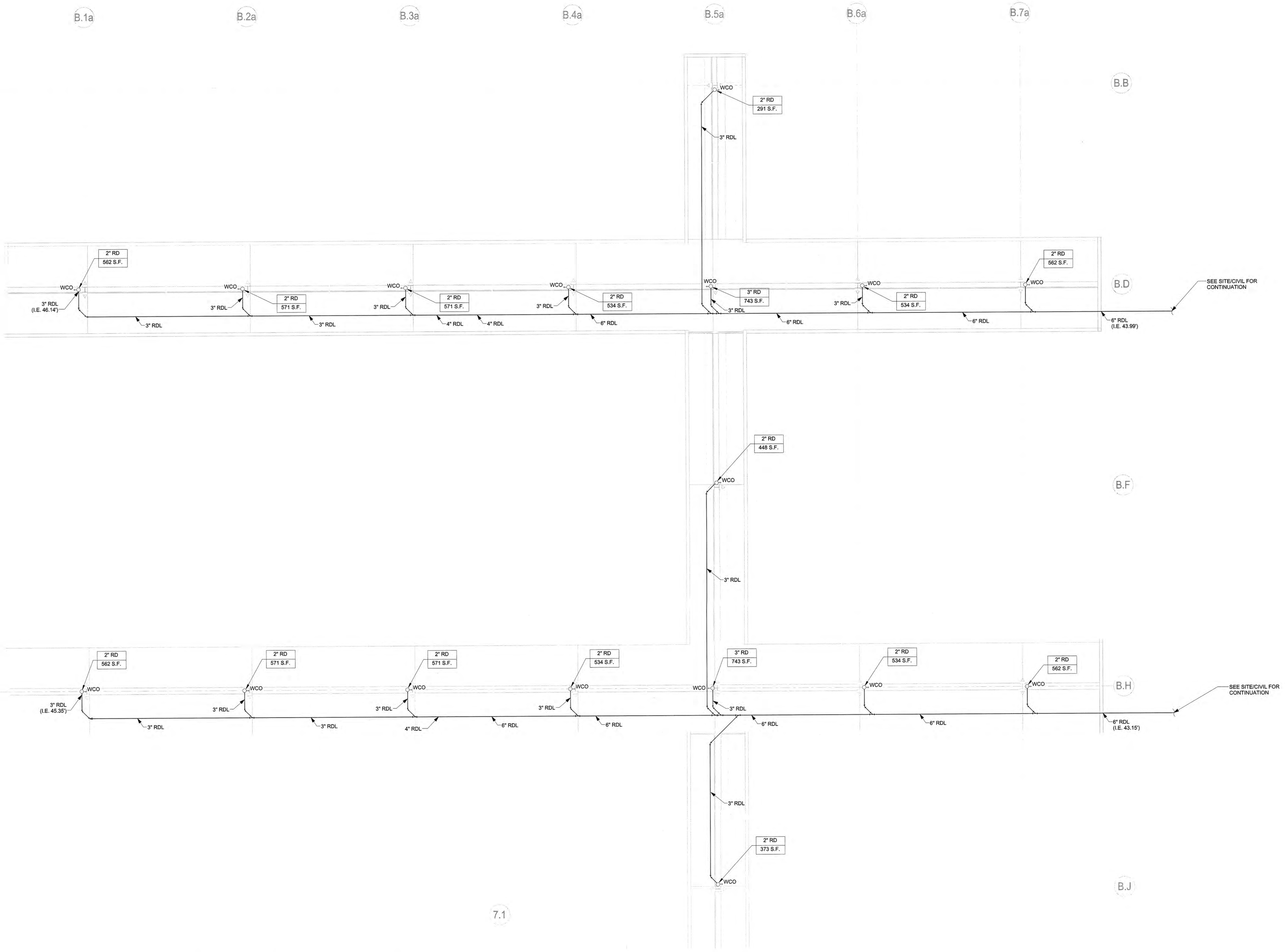

PLUMBING GROUND LEVEL CANOPY PLAN
1 1/8" = 1'-0"

Greenville
NORTH CAROLINA

JACOBS
333 Fayetteville Street, Suite 1100
Raleigh, NC 27601
PH: 919-334-3100 FX: 919-334-3122 www.jacobs.com
North Carolina Engineering Firm License No. F-287
North Carolina Architectural Firm Reg. No. 50757

AYERS SAINT GROSS

Consultants:
ARK Consulting Group, PLLC
Coaly Design
Landscape Architecture + Land Planning

Seals:

NORTH CAROLINA PROFESSIONAL ENGINEER SEAL 24042 ROBERT H. UNGER

General Notes:

Project Client:
Owner

GREENVILLE TRANSPORTATION ACTIVITY CENTER
600 S. Pitt Street, Greenville, NC

Number	Description	Date
0	IFC	05.10.2016

Key Plan:

Project North

CAD File:
Project No.: L3005900
Copyright: 2015 Jacobs Engineering Group

Drawing Sheet Title:
PLUMBING GROUND LEVEL CANOPY PLAN

Drawing Sheet Number:
P-104

Owner's Drawing Sheet No.:

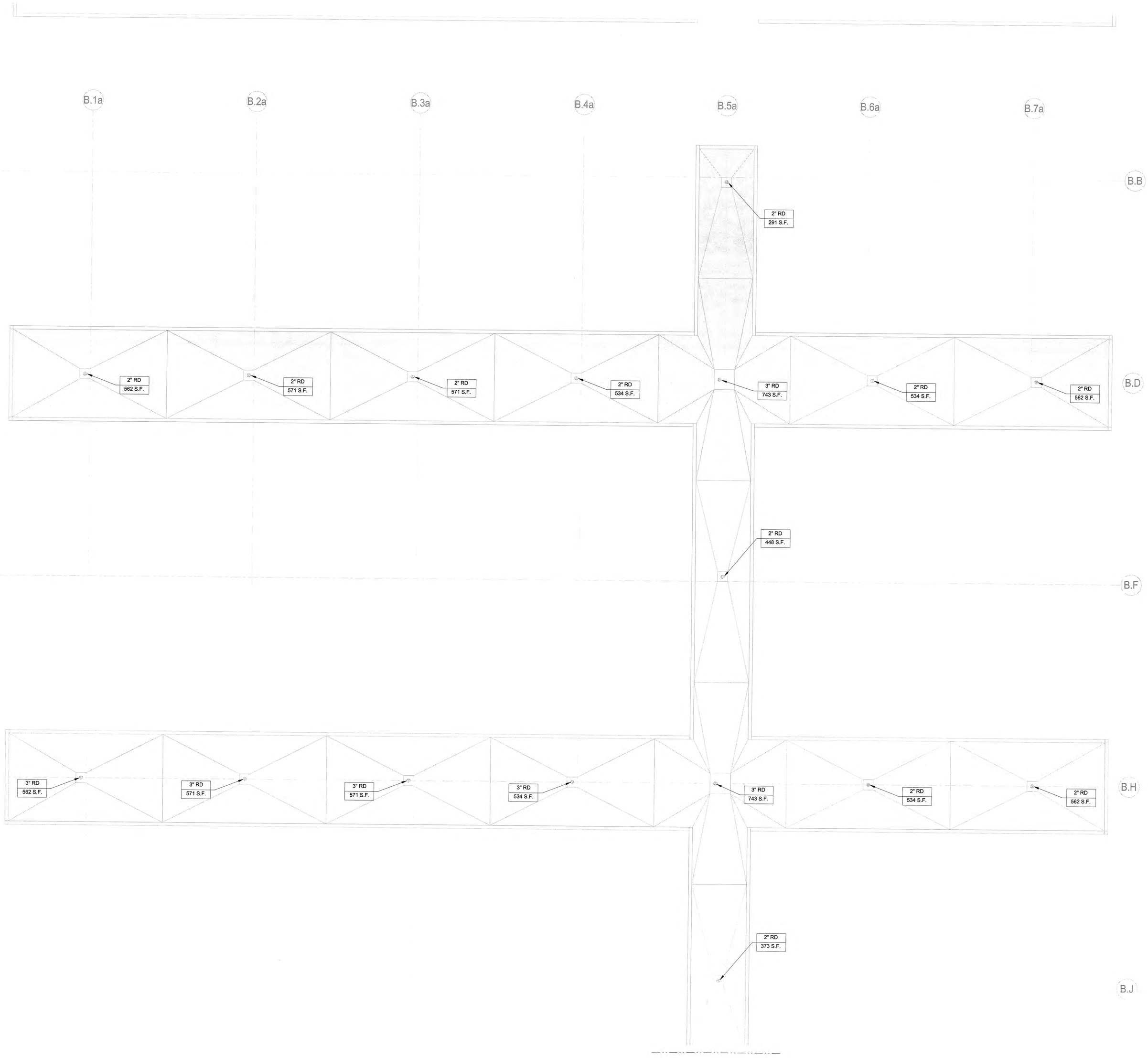

1 PLUMBING CANOPY ROOF PLAN
1/8" = 1'-0"

Greenville
NORTH CAROLINA

JACOBS
333 Fayetteville Street, Suite 1100
Raleigh, NC 27601
PH: 919-334-3100 FX: 919-334-3122 www.jacobs.com
North Carolina Engineering Firm License No. F-287
North Carolina Architectural Firm Reg. No. 50757

AYERS SAINT GROSS

Consultants:
ARK Consulting Group, PLLC

Coaly Design
Landscape Architecture + Land Planning

Seals:

NORTH CAROLINA PROFESSIONAL SEAL 24042 ENGINEER ROBERT H. UNGER 5/4/16

General Notes:

Project Client:
Owner

GREENVILLE
TRANSPORTATION
ACTIVITY CENTER
600 S. Pitt Street, Greenville, NC

Number	Description	Date
0	IFC	05.10.2016

Key Plan:

Project North

CAD File:
Project No.: L3005900
Copyright: 2015 Jacobs Engineering Group

Drawing Sheet Title:
PLUMBING CANOPY ROOF PLAN

Drawing Sheet Number:
P-105

Owner's Drawing Sheet No.:

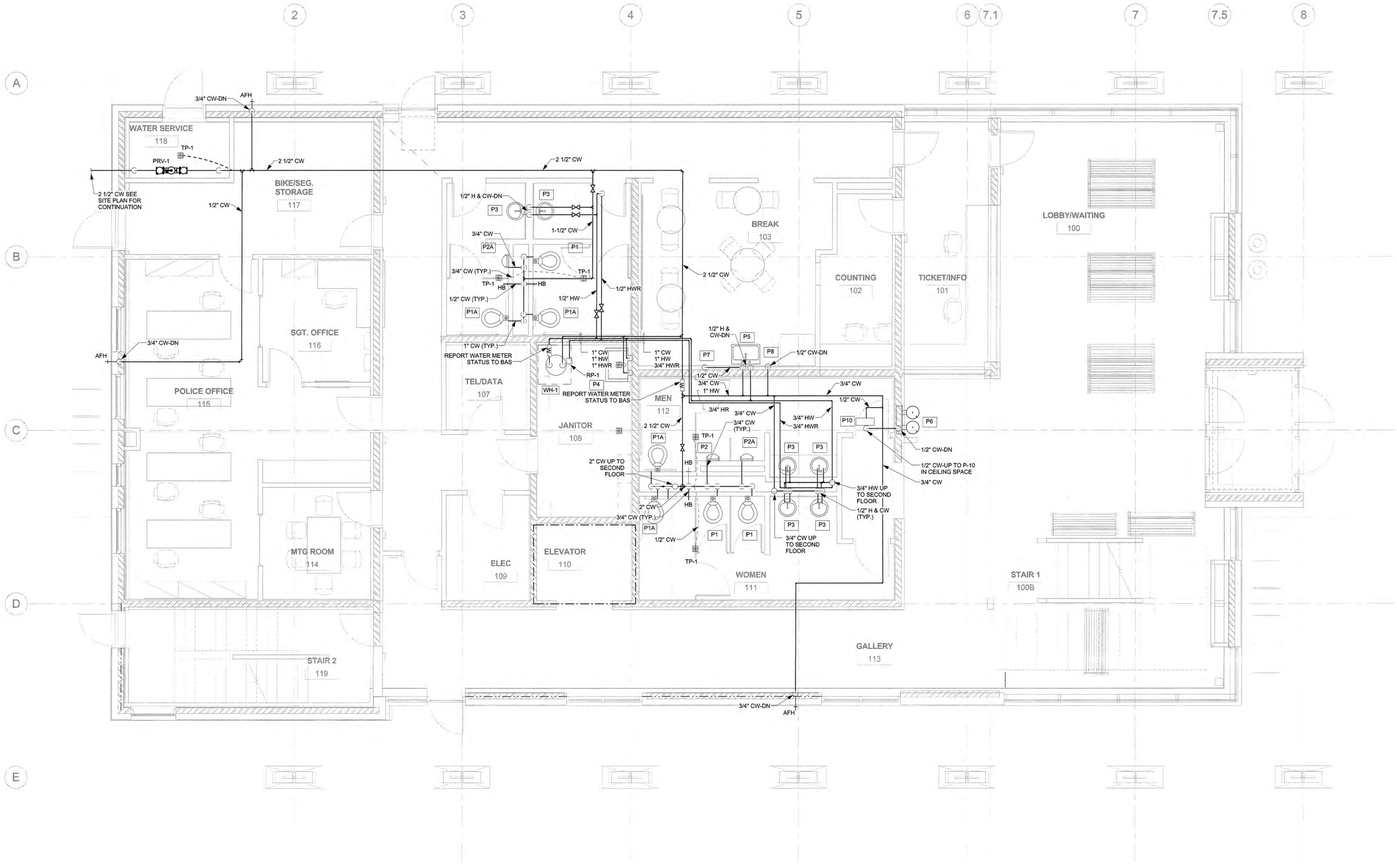

1 FIRST FLOOR WATER SUPPLY PLAN
1/4" = 1'-0"

Greenville
NORTH CAROLINA

JACOBS
333 Fayetteville Street, Suite 1100
Raleigh, NC 27601
PH: 919-334-3100 FX: 919-334-3122 www.jacobs.com
North Carolina Engineering Firm License No. F-287
North Carolina Architectural Firm Reg. No. 50757

AYERS SAINT GROSS

Consultants:
ARK Consulting Group, PLLC

Coaly Design
Landscape Architecture + Land Planning

Seals:

NORTH CAROLINA PROFESSIONAL SEAL 24042 ENGINEER ROBERT H. UNGER

General Notes:

1. ALL WASTE (SANITARY), RDL (STORM), DRAIN PIPING IS LOCATED BELOW SLAB, BELOW FLOOR, IN CHASES, OR WITHIN WALLS, UNLESS NOTED OTHERWISE.
2. ALL DOMESTIC WATER & VENT PIPING IS LOCATED ABOVE CEILING, IN CHASES, OR WITHIN WALLS, UNLESS NOTED OTHERWISE.
3. ALL PENETRATIONS OF CROSS LAMINATED TIMBER CONSTRUCTION (CLT) SHALL BE CAREFULLY PRE-COORDINATED WITH CLT SUPPLIER. MECHANICAL SUB WILL BE RESPONSIBLE FOR IDENTIFYING, CONFIRMING, AND COORDINATION OF ANY AND ALL PIPES, DUCTS, AND ASSOCIATED APPURTENANCES WELL IN ADVANCE OF ANY CONSTRUCTION.

FIRE RATING LEGEND

- 1-HR FIRE RATED WALL LINE
- 2-HR FIRE RATED WALL LINE
- CROSS LAMINATED TIMBER

Project Client:
Owner

GREENVILLE TRANSPORTATION ACTIVITY CENTER
600 S. Pitt Street, Greenville, NC

Number	Description	Date
0	IFC	05.10.2016

Key Plan:

Project North

CAD File:
Project No.: L3005900
Copyright: 2015 Jacobs Engineering Group

Drawing Sheet Title:
PLUMBING WATER FIRST FLOOR PLAN

Drawing Sheet Number:
P-201

Owner's Drawing Sheet No.:

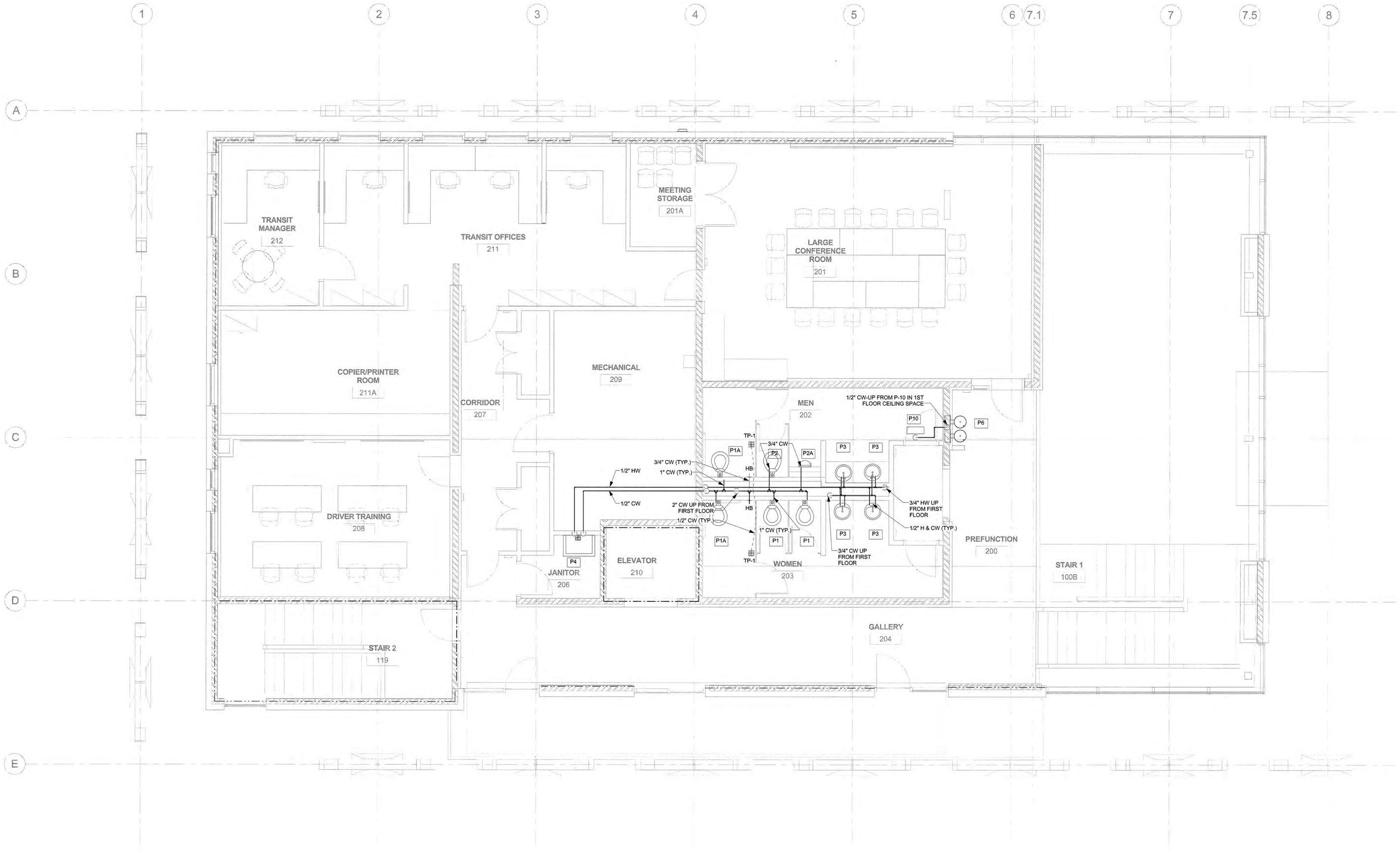

1 SECOND FLOOR WATER SUPPLY PLAN
1/4" = 1'-0"

Greenville
NORTH CAROLINA

JACOBS
333 Fayetteville Street, Suite 1100
Raleigh, NC 27601
PH: 919-334-3100 FX: 919-334-3122 www.jacobs.com
North Carolina Engineering Firm License No. F-287
North Carolina Architectural Firm Reg. No. 50757

AYERS SAINT GROSS

Consultants:
ARK Consulting Group, PLLC

Coaly Design
Landscape Architecture + Land Planning

Seals:

NORTH CAROLINA PROFESSIONAL SEAL 24042 ENGINEER ROBERT H. JUNGER

General Notes:

1. ALL WASTE (SANITARY), RDL (STORM), DRAIN PIPING IS LOCATED BELOW SLAB, BELOW FLOOR, IN CHASES, OR WITHIN WALLS, UNLESS NOTED OTHERWISE.
2. ALL DOMESTIC WATER & VENT PIPING IS LOCATED ABOVE CEILING, IN CHASES, OR WITHIN WALLS, UNLESS NOTED OTHERWISE.
3. ALL PENETRATIONS OF CROSS LAMINATED TIMBER CONSTRUCTION (CLT) SHALL BE CAREFULLY PRE-COORDINATED WITH CLT SUPPLIER, MECHANICAL SUB WILL BE RESPONSIBLE FOR IDENTIFYING, CONFIRMING, AND COORDINATION OF ANY AND ALL PIPES, DUCTS, AND ASSOCIATED APPURTENANCES WELL IN ADVANCE OF ANY CONSTRUCTION.

FIRE RATING LEGEND

1-HR FIRE RATED WALL LINE
2-HR FIRE RATED WALL LINE
CROSS LAMINATED TIMBER

Project Client:
Owner

GREENVILLE TRANSPORTATION ACTIVITY CENTER
600 S. Pitt Street, Greenville, NC

Number	Description	Date
0	IFC	05.10.2016

Key Plan:

Project North

CAD File:
Project No.: L3005900
Copyright: 2015 Jacobs Engineering Group

Drawing Sheet Title:
PLUMBING WATER SECOND FLOOR PLAN

Drawing Sheet Number:
P-202

Owner's Drawing Sheet No.:

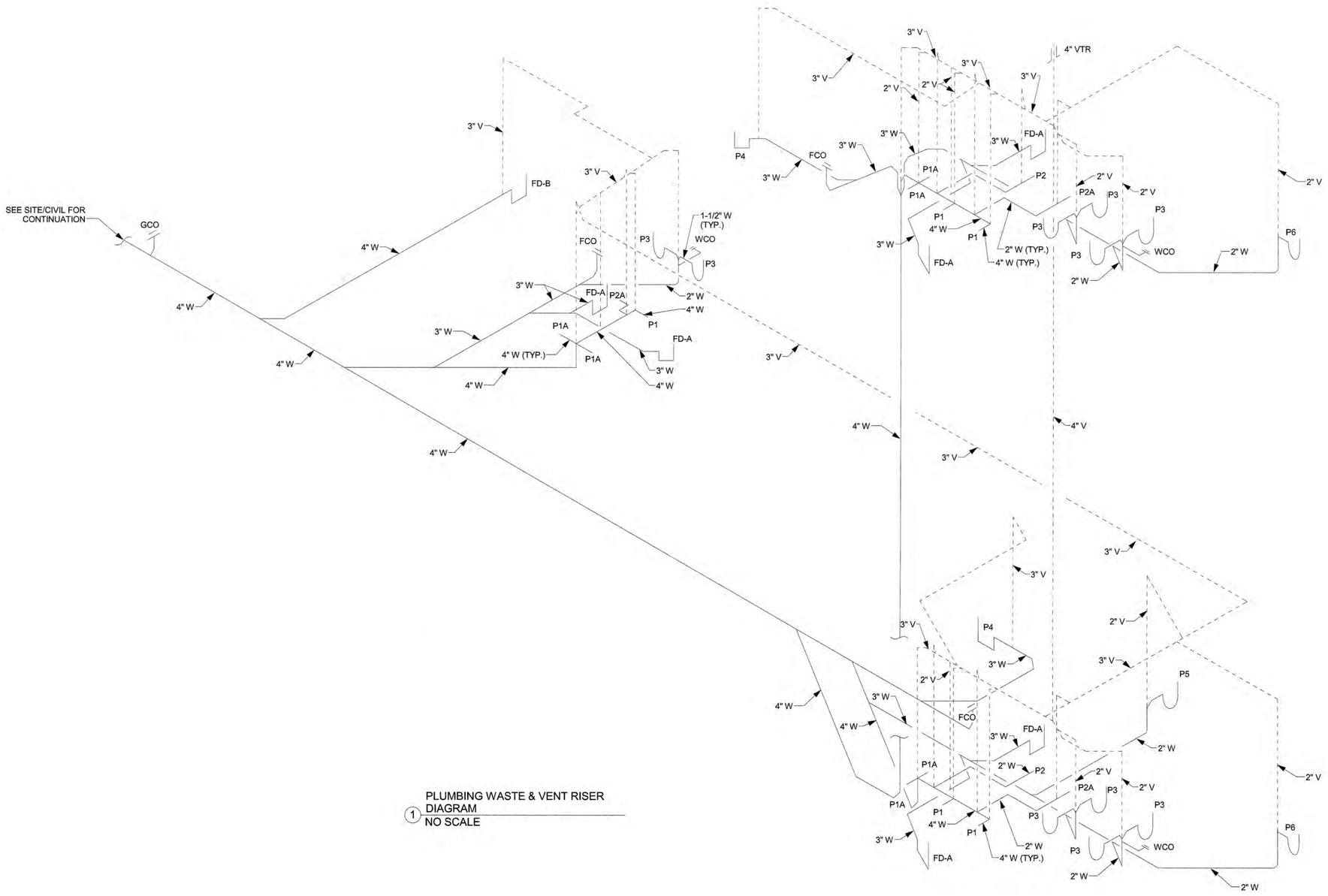

1 PLUMBING WASTE & VENT RISER DIAGRAM
NO SCALE

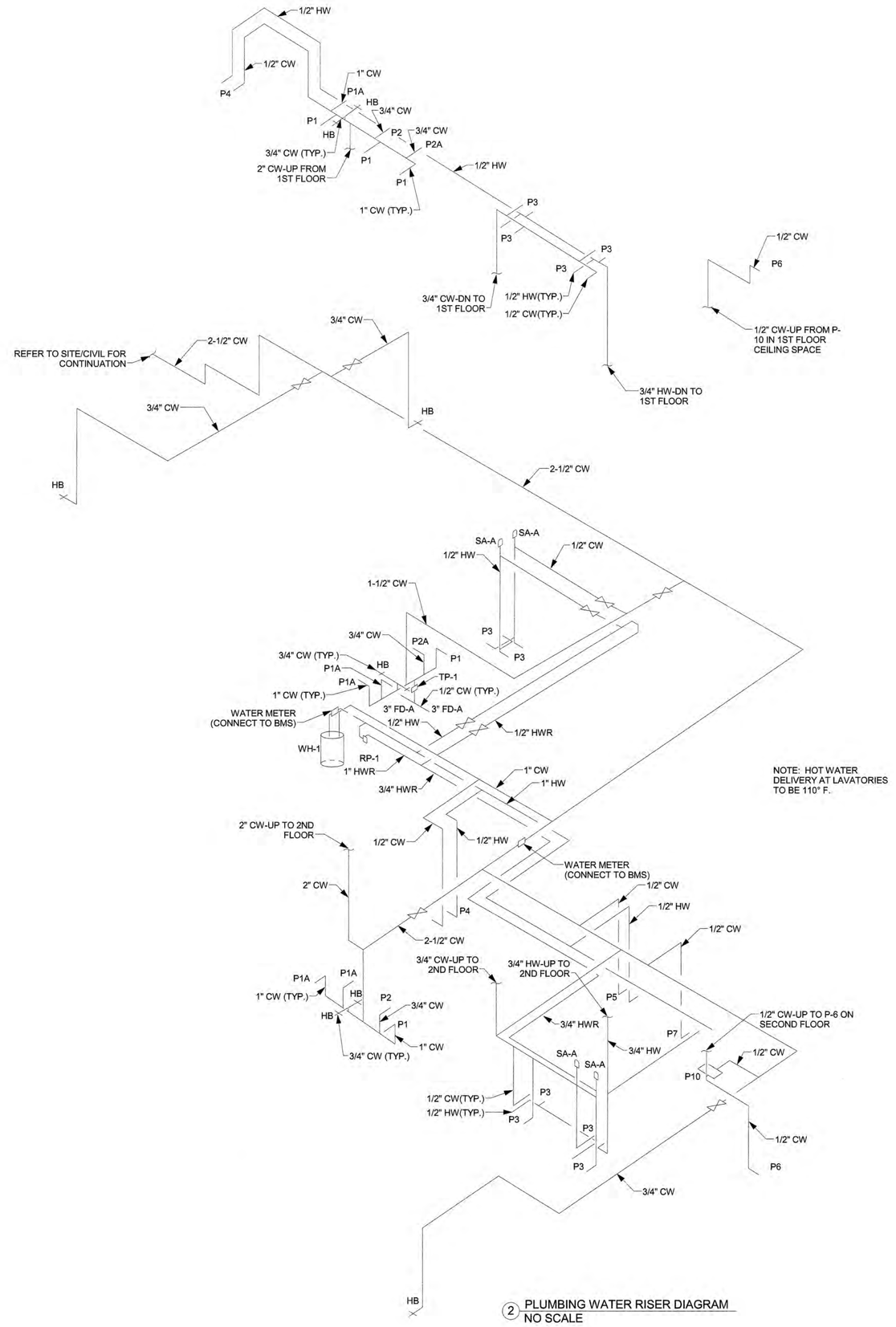

2 PLUMBING WATER RISER DIAGRAM
NO SCALE

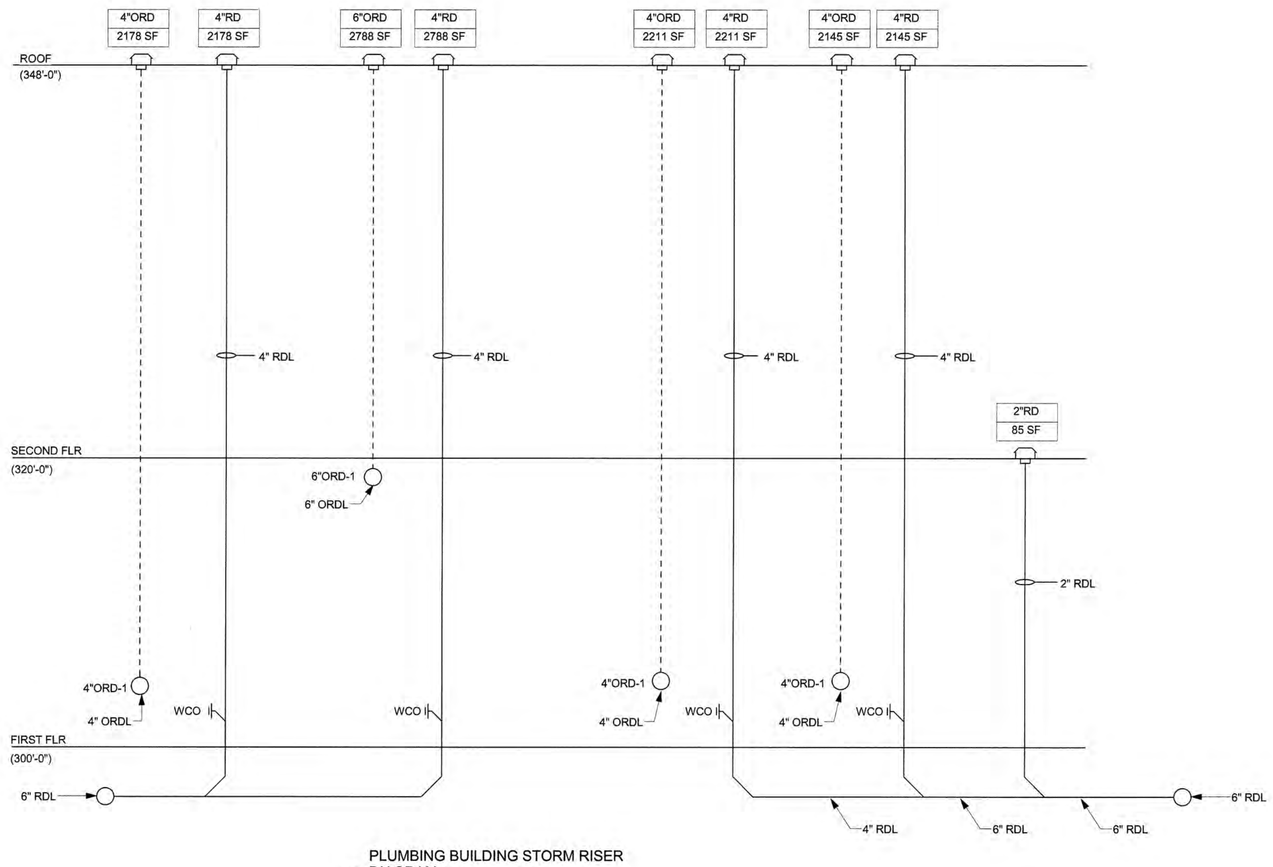

3 PLUMBING BUILDING STORM RISER DIAGRAM
NO SCALE

Greenville
NORTH CAROLINA

JACOBS

333 Fayetteville Street, Suite 1100
Raleigh, NC 27601
PH: 919-334-3100 FX: 919-334-3122 www.jacobs.com
North Carolina Engineering Firm License No. F-287
North Carolina Architectural Firm Reg. No. 50757

AYERS SAINT GROSS

Consultants:

ARK Consulting Group, PLLC

Coaly Design
Landscape Architecture + Land Planning

Seals:

NORTH CAROLINA PROFESSIONAL SEAL 24042 ENGINEER ROBERT H. UNGER

General Notes:

Project Client:
Owner

GREENVILLE TRANSPORTATION ACTIVITY CENTER
600 S. Pitt Street, Greenville, NC

Number	Description	Date
0	IFC	05.10.2016

Key Plan:

Project North

CAD File:
Project No.: L3005900
Copyright: 2015 Jacobs Engineering Group

Drawing Sheet Title:
PLUMBING WATER, WASTE, AND VENT RISER DIAGRAMS

Drawing Sheet Number:
P-601

Owner's Drawing Sheet No.:

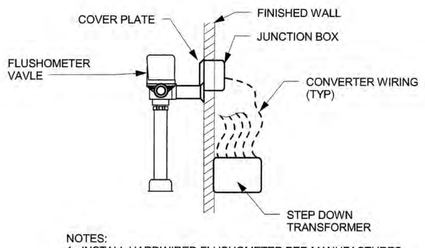

NOTES:
1. INSTALL HARDWIRED FLUSHOMETER PER MANUFACTURES WRITTEN RECOMMENDATIONS.
2. INSTALL STEP DOWN TRANSFORMER IN ACCESSABLE SPACE.
3. ELECTRICAL CONTRACTOR TO INSTALL ALL WIRING IN ACCORDANCE WITH ALL LOCAL AND STATE CODES.

1 FLUSHOMETER INSTALLATION DETAIL
NTS

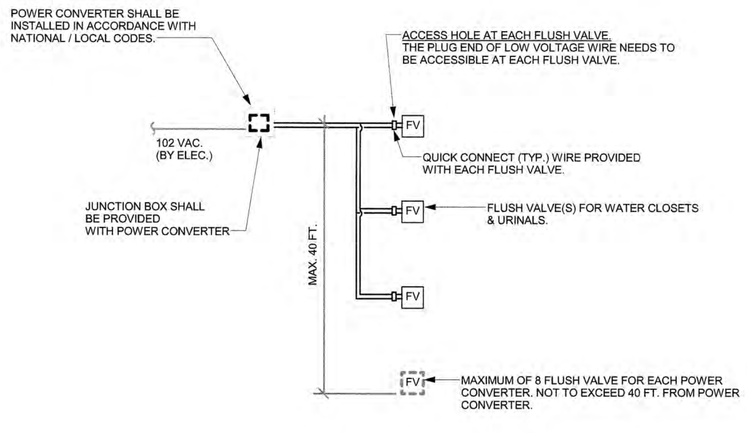

2 SENSOR FLUSH VALVE WIRING DIAGRAM
NTS

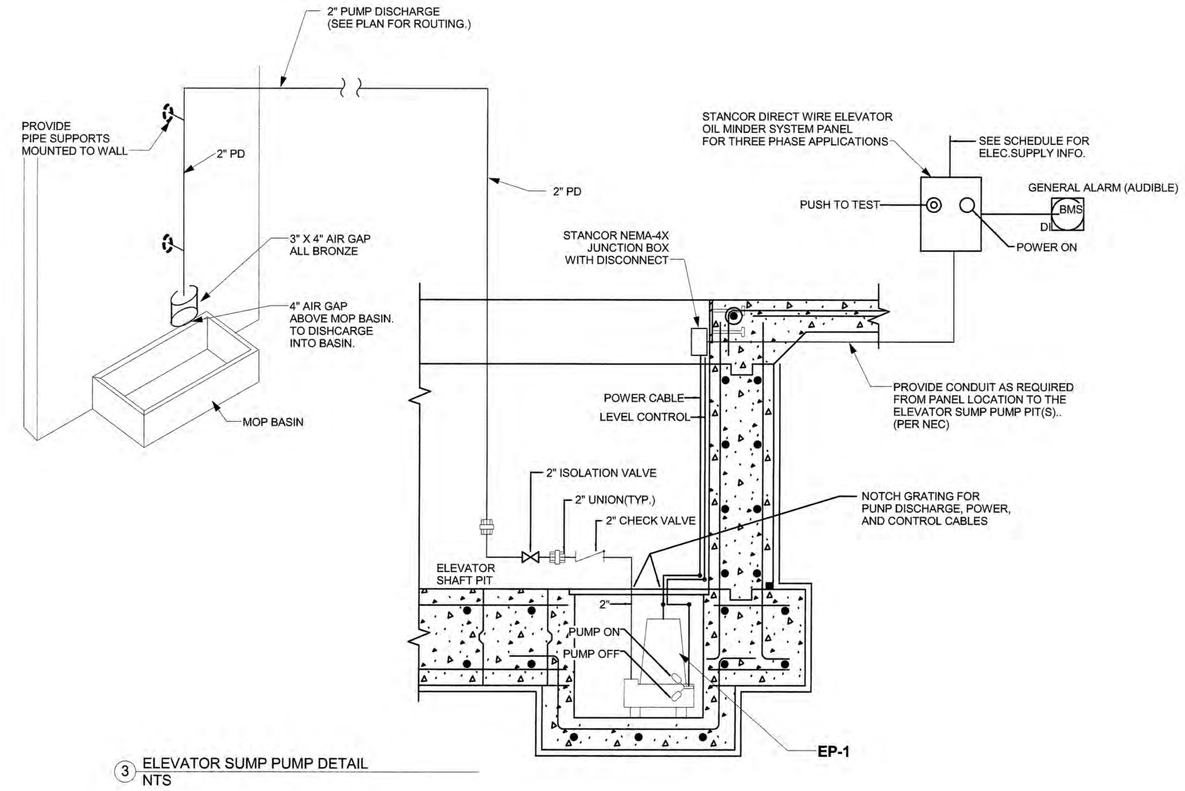

3 ELEVATOR SUMP PUMP DETAIL
NTS

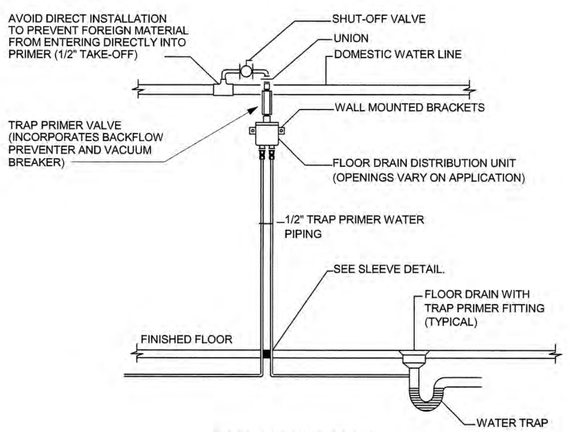

4 TRAP PRIMER DETAIL
NTS

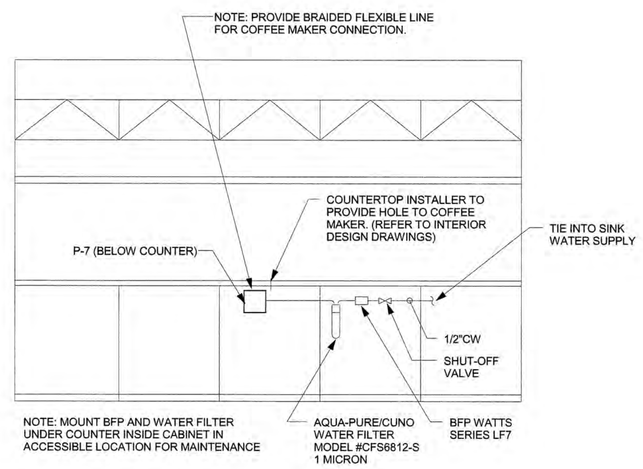

5 COFFEE MAKER/WATER FILTER
NTS

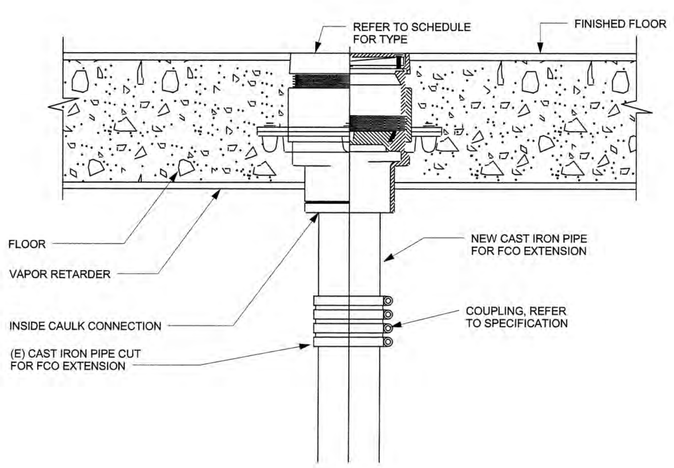

6 FLOOR DRAIN DETAIL
NTS

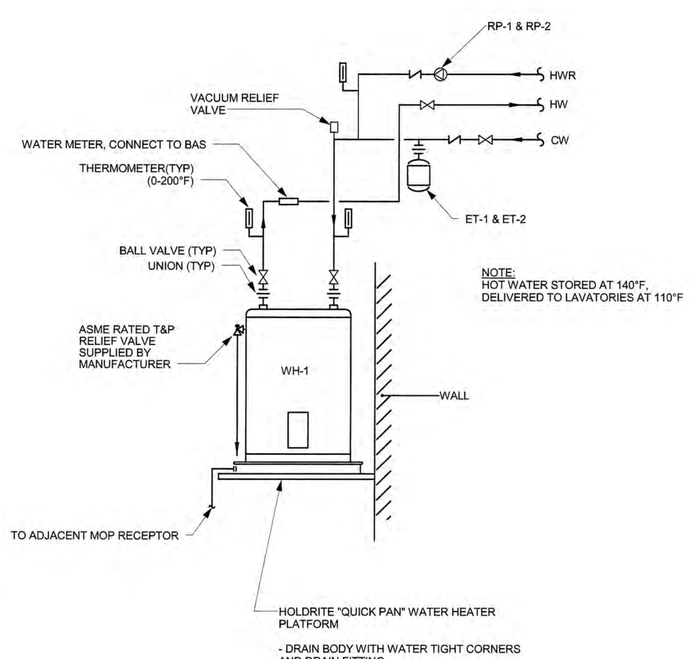

7 WATER HEATER INSTALLATION DETAIL
NONE

Greenville
NORTH CAROLINA

JACOBS

333 Fayetteville Street, Suite 1100
Raleigh, NC 27601
PH: 919-334-3100 FX: 919-334-3122 www.jacobs.com
North Carolina Engineering Firm License No. F-287
North Carolina Architectural Firm Reg. No. 50757

AYERS SAINT GROSS

Consultants:

ARK Consulting Group, PLLC

Coaly Design
Landscape Architecture + Land Planning

Seals:

NORTH CAROLINA PROFESSIONAL SEAL 24042 ENGINEER ROBERT H. UNGER
5/19/16

General Notes:

Project Client:
Owner

GREENVILLE TRANSPORTATION ACTIVITY CENTER
600 S. Pitt Street, Greenville, NC

Number	Description	Date
0	IFC	05.10.2016

Key Plan: Project North

CAD File:
Project No.: L3005900
Copyright: 2015 Jacobs Engineering Group

Drawing Sheet Title:
PLUMBING DETAILS

Drawing Sheet Number:
P-801

Owner's Drawing Sheet No.:

AW

ENGINEERING JUDGMENT FIRESTOP DETAIL

PROJECT : GTAC
CONTRACTOR : JACOBS
F-RATING = 1-HR. (SEE NOTE NO. 3 BELOW)

FRONT VIEW | SECTION A-A

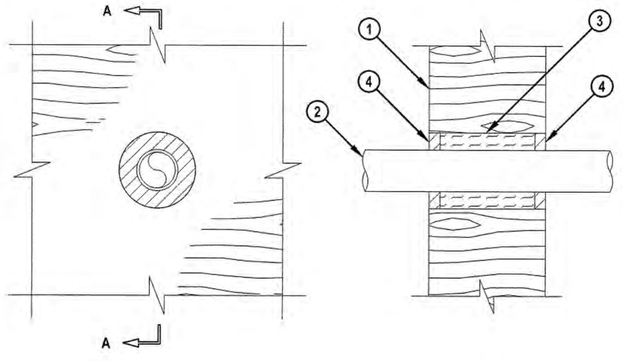

1. SOLID CROSS-LAMINATED TIMBER PANEL WALL (MINIMUM 6-2/3" THICK) AS DESCRIBED IN THE PRELIMINARY CLT FIRE RESISTANCE TESTING REPORT, PROJECT # 301006155 (1-HR. FIRE-RATING).
2. MAXIMUM 2" NOMINAL DIAMETER PVC PLASTIC PIPE (SCH 40).
3. MINERAL WOOL (MIN. 4 PCF DENSITY) TIGHTLY PACKED, RECESSED TO ACCOMMODATE SEALANT.
4. MINIMUM 5/8" DEPTH HILTI FS-ONE MAX INTUMESCENT FIRESTOP SEALANT, FLUSH WITH WALL SURFACES.

NOTES : 1. MAXIMUM DIAMETER OF OPENING = 4-3/8".
2. ANNULAR SPACE = MINIMUM 3/4", MAXIMUM 1-1/4".
3. FIRE-RATING OF ASSEMBLY IS DEPENDENT UPON THE PERFORMANCE OF WALL ASSEMBLY UNDER FIRE CONDITIONS.

THIS ENGINEERING JUDGMENT REPRESENTS A FIRESTOP SYSTEM THAT WOULD BE EXPECTED TO PASS THE STATED RATINGS IF TESTED.
(REFERENCE : UL/cUL SYSTEM NO. W-L-2474; UL SYSTEM NO. W-L-2098)

HILTI — Hilti Firestop Systems
HILTI, Inc. Plano, Texas USA (800) 879-8000
Designed by: Brett Littlefield
Sheet: 1 of 1 | Scale: 13/64" = 1" | Date: Oct. 30, 2015
Drawing No. 220317a
Saving Lives through Innovation and Education

AW

ENGINEERING JUDGMENT FIRESTOP DETAIL

PROJECT : GTAC
CONTRACTOR : JACOBS
F-RATING = 1-HR. (SEE NOTE NO. 3 BELOW)

FRONT VIEW | SECTION A-A

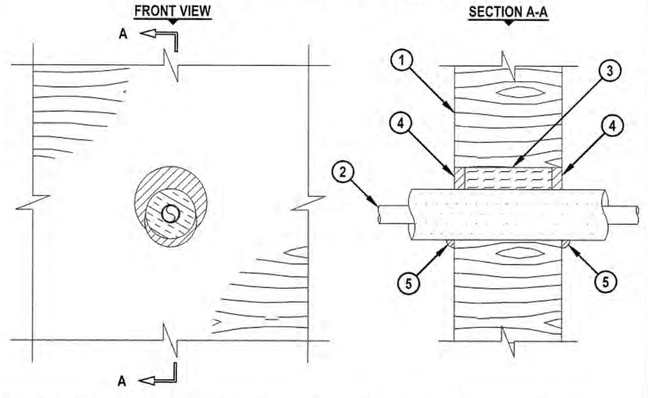

1. SOLID CROSS-LAMINATED TIMBER PANEL WALL (MINIMUM 6-2/3" THICK) AS DESCRIBED IN THE PRELIMINARY CLT FIRE RESISTANCE TESTING REPORT, PROJECT #301006155 (1-HR. FIRE-RATING).
2. MAXIMUM 1" NOMINAL DIAMETER COPPER TUBING WITH MINIMUM 1/2" THICK TO MAXIMUM 1" THICK AB/PVC PIPE INSULATION.
3. MINERAL WOOL (MIN. 4 PCF DENSITY) TIGHTLY PACKED, RECESSED TO ACCOMMODATE SEALANT.
4. MINIMUM 5/8" DEPTH HILTI FS-ONE MAX INTUMESCENT FIRESTOP SEALANT, FLUSH WITH WALL SURFACES.
5. MINIMUM 1/2" BEAD HILTI FS-ONE MAX INTUMESCENT FIRESTOP SEALANT APPLIED AT POINT OF CONTACT.

NOTES : 1. MAXIMUM DIAMETER OF OPENING = 4-1/2".
2. ANNULAR SPACE = MINIMUM 0", MAXIMUM 1-1/2".
3. FIRE-RATING OF ASSEMBLY IS DEPENDENT UPON THE PERFORMANCE OF WALL ASSEMBLY UNDER FIRE CONDITIONS.

THIS ENGINEERING JUDGMENT REPRESENTS A FIRESTOP SYSTEM THAT WOULD BE EXPECTED TO PASS THE STATED RATINGS IF TESTED.
(REFERENCE : UL/cUL SYSTEM NO. W-L-5028)

HILTI — Hilti Firestop Systems
HILTI, Inc. Plano, Texas USA (800) 879-8000
Designed by: Brett Littlefield
Sheet: 1 of 1 | Scale: 3/16" = 1" | Date: Oct. 30, 2015
Drawing No. 220318a
Saving Lives through Innovation and Education

AW

ENGINEERING JUDGMENT FIRESTOP DETAIL

PROJECT : GTAC
CONTRACTOR : JACOBS
F-RATING = 1-HR. (SEE NOTE NO. 3 BELOW)

FRONT VIEW | SECTION A-A

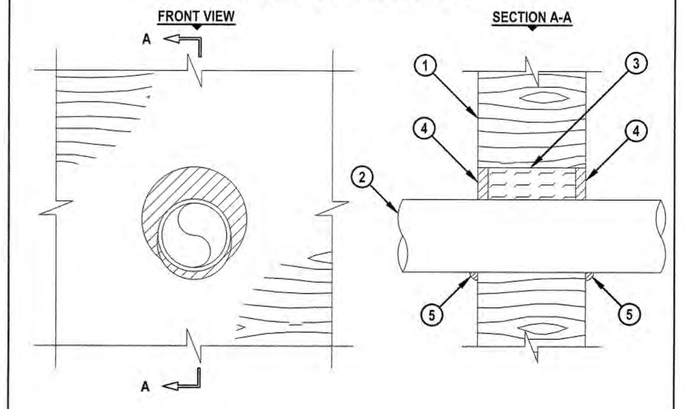

1. SOLID CROSS-LAMINATED TIMBER PANEL WALL (MINIMUM 6-2/3" THICK) AS DESCRIBED IN THE PRELIMINARY CLT FIRE RESISTANCE TESTING REPORT, PROJECT #301006155 (1-HR. FIRE-RATING).
2. MAXIMUM 4" NOMINAL DIAMETER CAST IRON PIPE (SCH 40).
3. MINERAL WOOL (MIN. 4 PCF DENSITY) TIGHTLY PACKED, RECESSED TO ACCOMMODATE SEALANT.
4. MINIMUM 5/8" DEPTH HILTI FS-ONE MAX INTUMESCENT FIRESTOP SEALANT, FLUSH WITH WALL SURFACES.
5. MINIMUM 1/2" BEAD HILTI FS-ONE MAX INTUMESCENT FIRESTOP SEALANT APPLIED AT POINT OF CONTACT.

NOTES : 1. MAXIMUM DIAMETER OF OPENING = 6-1/2".
2. ANNULAR SPACE = MINIMUM 0", MAXIMUM 2-1/2".
3. FIRE-RATING OF ASSEMBLY IS DEPENDENT UPON THE PERFORMANCE OF WALL ASSEMBLY UNDER FIRE CONDITIONS.

THIS ENGINEERING JUDGMENT REPRESENTS A FIRESTOP SYSTEM THAT WOULD BE EXPECTED TO PASS THE STATED RATINGS IF TESTED.
(REFERENCE : UL/cUL SYSTEM NO. W-L-1054)

HILTI — Hilti Firestop Systems
HILTI, Inc. Plano, Texas USA (800) 879-8000
Designed by: Brett Littlefield
Sheet: 1 of 1 | Scale: 3/16" = 1" | Date: Oct. 30, 2015
Drawing No. 220319a
Saving Lives through Innovation and Education

AW

ENGINEERING JUDGMENT FIRESTOP DETAIL

PROJECT : GTAC
CONTRACTOR : JACOBS
F-RATING = 2-HR. (SEE NOTE NO. 3 BELOW)

FRONT VIEW | SECTION A-A

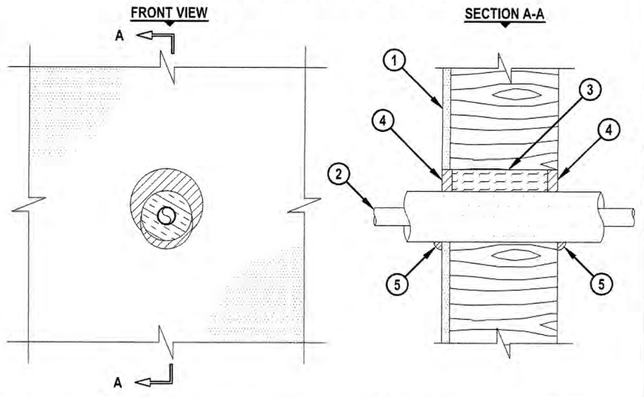

1. SOLID CROSS-LAMINATED TIMBER PANEL WALL (MINIMUM 6-2/3" THICK) AS DESCRIBED IN THE PRELIMINARY CLT FIRE RESISTANCE TESTING REPORT, PROJECT #301006155, WITH 1/2" THICK GLASS-FIBER FACED GYPSUM PANEL ATTACHED (2-HR. FIRE-RATING).
2. MAXIMUM 1" NOMINAL DIAMETER COPPER TUBING WITH MINIMUM 1/2" THICK TO MAXIMUM 1" THICK AB/PVC PIPE INSULATION.
3. MINERAL WOOL (MIN. 4 PCF DENSITY) TIGHTLY PACKED, RECESSED TO ACCOMMODATE SEALANT.
4. MINIMUM 5/8" DEPTH HILTI FS-ONE MAX INTUMESCENT FIRESTOP SEALANT, FLUSH WITH WALL SURFACES.
5. MINIMUM 1/2" BEAD HILTI FS-ONE MAX INTUMESCENT FIRESTOP SEALANT APPLIED AT POINT OF CONTACT.

NOTES : 1. MAXIMUM DIAMETER OF OPENING = 4-1/2".
2. ANNULAR SPACE = MINIMUM 0", MAXIMUM 1-1/2".
3. FIRE-RATING OF ASSEMBLY IS DEPENDENT UPON THE PERFORMANCE OF WALL ASSEMBLY UNDER FIRE CONDITIONS.

THIS ENGINEERING JUDGMENT REPRESENTS A FIRESTOP SYSTEM THAT WOULD BE EXPECTED TO PASS THE STATED RATINGS IF TESTED.
(REFERENCE : UL/cUL SYSTEM NO. W-L-5028)

HILTI — Hilti Firestop Systems
HILTI, Inc. Plano, Texas USA (800) 879-8000
Designed by: Brett Littlefield
Sheet: 1 of 1 | Scale: 3/16" = 1" | Date: Oct. 30, 2015
Drawing No. 220320a
Saving Lives through Innovation and Education

AW

ENGINEERING JUDGMENT FIRESTOP DETAIL

PROJECT : GTAC
CONTRACTOR : JACOBS
F-RATING = 2-HR. (SEE NOTE NO. 3 BELOW)

FRONT VIEW | SECTION A-A

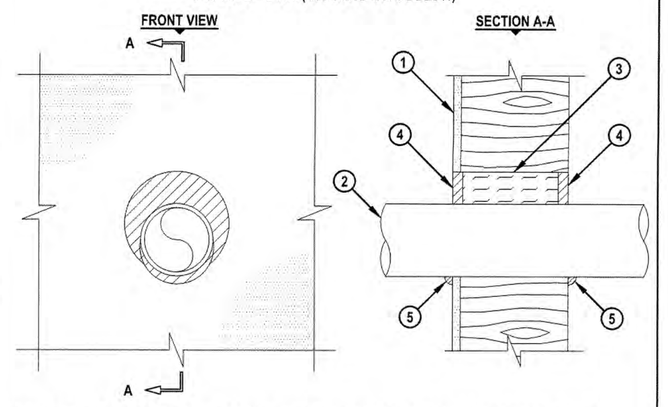

1. SOLID CROSS-LAMINATED TIMBER PANEL WALL (MINIMUM 6-2/3" THICK) AS DESCRIBED IN THE PRELIMINARY CLT FIRE RESISTANCE TESTING REPORT, PROJECT #301006155, WITH 1/2" THICK GLASS-FIBER FACED GYPSUM PANEL ATTACHED. (2-HR. FIRE-RATING).
2. MAXIMUM 4" NOMINAL DIAMETER CAST IRON PIPE.
3. MINERAL WOOL (MIN. 4 PCF DENSITY) TIGHTLY PACKED, RECESSED TO ACCOMMODATE SEALANT.
4. MINIMUM 5/8" DEPTH HILTI FS-ONE MAX INTUMESCENT FIRESTOP SEALANT, FLUSH WITH WALL SURFACES.
5. MINIMUM 1/2" BEAD HILTI FS-ONE MAX INTUMESCENT FIRESTOP SEALANT APPLIED AT POINT OF CONTACT.

NOTES : 1. MAXIMUM DIAMETER OF OPENING = 6-1/2".
2. ANNULAR SPACE = MINIMUM 0", MAXIMUM 2-1/2".
3. FIRE-RATING OF ASSEMBLY IS DEPENDENT UPON THE PERFORMANCE OF WALL ASSEMBLY UNDER FIRE CONDITIONS.

THIS ENGINEERING JUDGMENT REPRESENTS A FIRESTOP SYSTEM THAT WOULD BE EXPECTED TO PASS THE STATED RATINGS IF TESTED.
(REFERENCE : UL/cUL SYSTEM NO. W-L-1054)

HILTI — Hilti Firestop Systems
HILTI, Inc. Plano, Texas USA (800) 879-8000
Designed by: Brett Littlefield
Sheet: 1 of 1 | Scale: 3/16" = 1" | Date: Oct. 30, 2015
Drawing No. 220321a
Saving Lives through Innovation and Education

Greenville NORTH CAROLINA

JACOBS
333 Fayetteville Street, Suite 1100
Raleigh, NC 27601
PH: 919-334-3100 FX: 919-334-3122 www.jacobs.com
North Carolina Engineering Firm License No. F-287
North Carolina Architectural Firm Reg. No. 50757

AYERS SAINT GROSS

Consultants:
ARK Consulting Group, PLLC

Coaly Design
Landscape Architecture + Land Planning

Seals:

NORTH CAROLINA PROFESSIONAL SEAL 24042 ENGINEER ROBERT H. UNGER, 5/4/16

General Notes:

Project Client:
Owner

GREENVILLE
TRANSPORTATION
ACTIVITY CENTER
600 S. Pitt Street, Greenville, NC

Number	Description	Date
0	IFC	05.10.2016

Key Plan:

Project North

CAD File:
Project No.: L3005900
Copyright: 2015 Jacobs Engineering Group

Drawing Sheet Title:
PLUMBING DETAILS

Drawing Sheet Number:
P-802

Owner's Drawing Sheet No.:

PLUMBING FIXTURE SCHEDULE

SYMBOL	DESCRIPTION	TYPE	ROUGH-IN CONNECTIONS				COMPONENT	DESCRIPTION	REMARKS
			WASTE	VENT	CW	HW			
P1	WATER CLOSET	WALL MTD.	4"	2"	1"	--	CLOSET	SLOAN MODEL ST-2459-A UNIVERSAL 1.28 GPF HET ELONGATED "WHITE" WALL MOUNTED VITREOUS CHINA WATER CLOSET, SIPHON JET FLUSHING ACTION, 1-1/2" TOP SPUD INLET, 2-1/8" FULLY GLAZED TRAPWAY DIAMETER, ASME 112.19.2/CSA B45.1.	SUPPORT SUPPLY PIPE THRU WALL WITH HOLDRITE #107-26 COPPER BONDED STEEL BRACKET PIPE SUPPORT.
							VALVE	SLOAN "OPTIMA" MODEL 111-1.28 HW EXPOSED HARDWIRE, SENSOR ACTIVATED HIGH-EFFICIENCY WATER CLOSET FLUSHOMETER WITH OVERRIDE BUTTON TO ALLOW A "COURTESY FLUSH" PROVIDE EITHER 9" OR 18" ELECTRICAL CABLE BASED ON LEFT OR RIGHT HAND ROUGH-IN	
							SEAT	CHURCH "COMMERCIAL" MODEL 3155SSCT ELONGATED WHITE OPEN FRONT SEAT LESS COVER WITH SELF SUSTAINING S.S. CHECK HINGE WITH "DURAGUARD" ANATOMIC COATING.	See Note 1
P1A	WATER CLOSET ADA COMPLIANT	WALL MTD.	4"	2"	1"	--	CLOSET	SLOAN MODEL ST-2459-A UNIVERSAL 1.28 GPF HET ELONGATED "WHITE" WALL MOUNTED VITREOUS CHINA WATER CLOSET, SIPHON JET FLUSHING ACTION, 1-1/2" TOP SPUD INLET, 2-1/8" FULLY GLAZED TRAPWAY DIAMETER, ASME 112.19.2/CSA B45.1.	SUPPORT SUPPLY PIPE THRU WALL WITH HOLDRITE #107-26 COPPER BONDED STEEL BRACKET PIPE SUPPORT.
							VALVE	SLOAN "OPTIMA" MODEL 111-1.28 HW EXPOSED HARDWIRE, SENSOR ACTIVATED HIGH-EFFICIENCY WATER CLOSET FLUSHOMETER WITH OVERRIDE BUTTON TO ALLOW A "COURTESY FLUSH" PROVIDE EITHER 9" OR 18" ELECTRICAL CABLE BASED ON LEFT OR RIGHT HAND ROUGH-IN	
							SEAT	CHURCH "COMMERCIAL" MODEL 3155SSCT ELONGATED WHITE OPEN FRONT SEAT LESS COVER WITH SELF SUSTAINING S.S. CHECK HINGE WITH "DURAGUARD" ANATOMIC COATING.	See Note 1.
P2	URINAL	FLOOR MTD.	2"	2"	3/4"	--	URINAL	SLOAN MODEL SU-7009-A "UNIVERSAL" 0.125 GPF HET ELONGATED "WHITE" WALL MOUNTED URINAL SLOAN "ECOS" MODEL 186-0.125 EXPOSED HARDWIRE, SENSOR ACTIVATED URINAL FLUSHOMETER WITH SMART SENSE TECHNOLOGY WITH OVERRIDE BUTTON TO ALLOW A "COURTESY FLUSH" PROVIDE EITHER 9" OR 18" ELECTRICAL CABLE BASED ON LEFT OR RIGHT HAND ROUGH-IN.	SUPPORT SUPPLY PIPE THRU WALL WITH HOLDRITE #107-26 COPPER BONDED STEEL BRACKET PIPE SUPPORT.
P2A	URINAL ADA COMPLIANT	FLOOR MTD.	2"	2"	3/4"	--	URINAL	SLOAN MODEL SU-7009-A "UNIVERSAL" 0.125 GPF HET ELONGATED "WHITE" WALL MOUNTED URINAL SLOAN "ECOS" MODEL 186-0.125 EXPOSED HARDWIRE, SENSOR ACTIVATED URINAL FLUSHOMETER WITH SMART SENSE TECHNOLOGY WITH OVERRIDE BUTTON TO ALLOW A "COURTESY FLUSH" PROVIDE EITHER 9" OR 18" ELECTRICAL CABLE BASED ON LEFT OR RIGHT HAND ROUGH-IN.	See Note 1.
P3	LAVATORY ADA COMPLIANT	CAB. MTD.	1-1/2"	--	1/2"	1/2"	LAVATORY	KOHLER "LADENA" K2215 21" X 14" SQUARE UNDER MOUNT WHITE VITREOUS CHINA LAVATORY WITH OVERFLOW & WITH 1193643 CLAMP ASSEMBLY.	SUPPORT SUPPLY PIPE THRU WALL WITH HOLDRITE #107-26 COPPER BONDED STEEL BRACKET PIPE SUPPORT
							FAUCET	CHICAGO 116.121.AB.1 HYTRONIC EDGE LAVATORY FAUCET SINGLE HOLE (LOW LEAD) WITH DUAL BEAM INFRARED SENSOR, 0.5 GPM VANDAL PROOF NON-AERATOR OUTLET, USER ADJUSTABLE TEMPERATURE CONTROL MIXER, STAINLESS STEEL BRAIDED HOSES WITH 9 MICRON FILTER. 240.630.00.1 TRANSFORMER TYPE PLUG IN. NSF/ANSI 372 LOW LEAD CONTENT. ADA ANSI/ICC A117.1	
							SUPPLY	ZURN ZH8820-XL-LRLK-8860-12-PC (1/2" x 3/8") - XL LEAD FREE HEAVY DUTY LOOSE KEY STOP & LAVATORY SUPPLY KIT (CONNECTION 3/8" IPS X 3/8" OD) WITH BRAIDED STAINLESS STEEL SUPPLIES	PROVIDE PRECISION PLUMBING PRODUCTS BAC-2-BAC MANIFOLD WHERE APPLICABLE.
							DRAIN	ZURN Z8743-PC GRID DRAIN & ZURN Z8700-88-PC (1-1/4") - CHROME PLATED P-TRAP SHALL BE CAST BRASS BODY WITH CLEANOUT WITH 17 GAUGE SEAMLESS TUBULAR WALL BEND AND FLANGE.	
							INSULATION	PLUMBEREX TRAP-GEAR MODEL 396 WHITE, ASTM-E 84-07 CLASS A INSULATION MATERIAL.	See Note 2.
P4	MOP BASIN	-	3"FD	--	1/2"	1/2"	MOP BASIN	STERN WILLIAMS MODEL CRS-2200, 36"x24"x12" TERRAZZO RECEPTOR WITH STAINLESS STEEL CAP. (BP) SPLASH CATCHER PANELS OF 20 GA. TYPE 304 STAINLESS STEEL. (T-35) HOSE & WALL HOOK (T-40) STAINLESS STEEL MOP HANGER OF STAINLESS STEEL WITH #4 FINISH.	PROVIDE 3/4" HOSE BIBB OUTLET WITH WATTS N9-CD FOR CHEMICAL DISPENSER SUPPLY.
							FAUCET	STERN WILLIAMS T-10-VB MOP SERVICE SINK FAUCET WITH VACUUM BREAKER.	
P5	KITCHEN SINK DOUBLE BOWL ADA COMPLIANT	--	1-1/2"	--	1/2"	1/2"	SINK	JUST MFG. UD-ADA-1832-A ADA COMPLAINT UNDERMOUNT DOUBLE BOWL TYPE 304 18-8 STAINLESS STEEL SINK 18" x 32" x 5-1/2" DEEP DRAIN: CENTER-REAR.	
							FAUCET	KOHLER "FORTE" KITCHEN FAUCET MODEL K-10415 DECK MOUNTED CHROME POLISHED SINGLE LEVER KITCHEN FAUCET WITH 2.2 GPM AERATOR, CERAMIC DISC CARTRIDGE.	
P6	ELECTRIC WATER COOLER	--	1-1/2"	--	1/2"	--	--	ELKAY MODEL EDFPBM117C "NO-LEAD" TWO-LEVEL "SWIRL-FLO" FILTERED WALL MOUNT, BARRIER-FREE, REFRIGERATED FOUNTAIN WITH EZH20 BOTTLE FILLING STATION WITH FRONT ACCESS PANEL TO BOTTLE FILLER (ACCESS12X38-5). STAINLESS STEEL CONSTRUCTION WITH ABS ALCOVE. UNIT SHALL INCLUDE THE WATER SENTRY PLUS 3000 GALLON CAPACITY FILTER, CERTIFIED TO NSF/ANSI 42 AND 53., FLEXIBLE BUBBLER GUARD. LEAD-FREE IN MATERIALS AND CONSTRUCTION. 134A REFRIGERANT, SHALL COMPLY WITH ANSI 117.1 AND ADA, SHALL COMPLY WITH NSF/ANSI 61 & 372, BUILT-IN 100 MICRON STRAINER	EZH20 BOTTLE FILLING STATION
P7	COFFEE MAKER	--	--	-	1/2"	--	--	OATEY MODEL 38689 COFFEE MAKER OUTLET BOX WITH 1/4 TURN BRASS HAMMER BALL VALVE. PROVIDE FLEXIBLE BRAIDED HOSE FOR CONNECTION TO EQUIPMENT.	SEE DETAIL ON P-801 FOR INFORMATION IN WATER FILTER AND BFP DEVICE
P8	ICE MACHINE	--	--	-	1/2"	--	--	OATEY MODEL 38689 COFFEE MAKER OUTLET BOX WITH 1/4 TURN BRASS HAMMER BALL VALVE. PROVIDE FLEXIBLE BRAIDED HOSE FOR CONNECTION TO EQUIPMENT.	SEE DETAIL P-801 FOR INFORMATION IN WATER FILTER AND BFP DEVICE
P9	NOT USED	--	--	-	-	--	--		
P10	REMOTE CHILLER	--	--	-	1/2"	--	--	ELKAY MODEL ER-10 "NO-LEAD" RUST RESISTANT, GALVANIZED STEEL CABINET CONTRUCTION LEAD-FREE IN MATERIALS AND CONSTRUCTION. 134A REFRIGERANT, SHALL COMPLY WITH NSF/ANSI 61 & 372	

NOTES:

1.) PROVIDE ZURN HW6 POWER CONVERTER WITH 2 GANG ELECTRICAL BOX (4-11/16" x 4-11/16" x 2-1/8") FOR EACH MEN'S AND WOMEN'S GANG OF FLUSH VALVES. SEE DETAIL 10/P-801.

2.) PROVIDE TRANSFORMER TYPE PLUG-IN FOR EACH LAVATORY SENSOR FAUCET. ONE OUTLET IS REQUIRED FOR EVERY TWO LAVATORIES.

ELECTRIC WATER HEATER & ASSOCIATED EQUIPMENT SCHEDULE

SYMBOL	CAPACITY (GALLON)	DESCRIPTION	RECOVERY RATE IN GALLONS PER HOUR (40 F TO 130 F)	ELECTRICAL		DIMENSIONS		BMS CONNECTION	MANUFACTURER	MODEL NO.	REMARKS
				KW	V/PH/HZ	DIAMETER (INCHES)	HEIGHT (INCHES)				
WH-1	47	ELEC. WATER HTR.	21	4.5	208/1/60	26-1/4"	32"	NO	RHEEM	PROE47 S2 RH91	RHEEM "LOWBOY ENERGY SAVER MODEL" PROVIDE EACH UNIT WITH - HOLDRITE "QUICK-PAN" MODEL QP-28 & WATTS "LEAD-FREE" BRAIDED QUICK CONNECT 18" SUPPLY LINES. MONITOR HEATER, PUMP STATUS, AND ALARMS WITH BMS.
ET-1	2.1	EXPANSION TANK	--	--	--	--	--	NO	WATTS	PLT-5-M1	WATTS "LEAD-FREE" SERIES PLT POTABLE WATER EXPANSION TANKS CERTIFIED TO ANSI/NSF-61
RP-1	--	RECIRC. PUMP.	1 GPM @ 12 FT/HD.	55 WATTS	120/1/60	--	--	NO	B&G	NBF-12U/LW	ALL BRONZE, LEAD-FREE WET ROTOR RECIRC PUMP. WITH TC-1 AUTOMATIC TIMER KIT.
BV-1	--	BALANCE VALVE	--	--	--	--	--	NO	B&G	CB-3/4S-LF	BELL&GOSSETT "LEAD-FREE" BRASS BODY/SS BALL CONSTRUCTION WITH GLASS AND CARBON FILLED TFE SEAT RINGS, READ-OUT PORTS,
BV-2	--	BALANCE VALVE	--	--	--	--	--	NO	B&G	CB-3/4S-LF	BELL&GOSSETT "LEAD-FREE" BRASS BODY/SS BALL CONSTRUCTION WITH GLASS AND CARBON FILLED TFE SEAT RINGS, READ-OUT PORTS,

PLUMBING SPECIALTIES SCHEDULE

SYMBOL	DESCRIPTION	BASIS OF DESIGN			DESCRIPTION
		SIZE	MANUFACTURER	MODEL NO.	
PRV-1	PRESSURE REDUCING VALVE	2 1/2"	WATTS	LF25AUB-ZE	LEAD FREE - PRESSURE REDUCING VALVE WITH STRAINER, NPT UNION INLET & OUTLET WITH BUILT-IN BY-PASS
BFP-1	BACKFLOW PREVENTER	2 1/2"	WATTS	LF909-NRS-S-FDA-AG	LEAD FREE - RPZ TYPE BACKFLOW PREVENTER WITH NON-RISING STEM, FDA STRAINER, AIR-GAP
AFH	NON-FREEZE WALL HYDRANT	1/2"	MIFAB	MHY-20	A.S.S.E. 1019-B APPROVED EXPOSED TYPE, SELF-DRAINING, NON-FREEZE WALL HYDRANT WITH A.S.S.E 1011 APPROVED ANTI-SIPHON INTEGRAL VACUUM BREAKER WITH 3/4" MALE HOSE CONNECTION.
HB	NARROW WALL HYDRANT	1/2"	MIFAB	MHY-50	A.S.S.E. 1019-B APPROVED EXPOSED TYPE, SELF-DRAINING, NON-FREEZE WALL HYDRANT WITH A.S.S.E 1011 APPROVED ANTI-SIPHON INTEGRAL VACUUM BREAKER WITH 3/4" MALE HOSE CONNECTION.

NOTE: THE STANDARD SETTING ON THE PRESSURE REDUCING VALVES FROM THE FACTORY IS 50 PSI.

PLUMBING ACCESSORIES SCHEDULE

SYMBOL	DESCRIPTION	LOCATION	DESCRIPTION	REMARKS
FD-A	FLOOR DRAIN	TOILET ROOMS	MIFAB MODEL F1000-3-7 CAST IRON BODY AND FLASHING COLLAR WITH ADJUSTABLE 6" ROUND STAINLESS STEEL TOP, PROVIDE TRAP PRIMER CONNECTION TO ALL EXCEPT SHOWER STALL DRAINS.	SEE NOTE 1
FD-B	FLOOR DRAIN	MECHANICAL ROOMS	MIFAB MODEL F1100C-N9-3-7 CAST IRON FLANGED RECEPTOR WITH SEEPAGE HOLES, ACID RESISTANT COATED INTERIOR, 9" STAINLESS STEEL RIM AND SECURED GRATE, AND SEDIMENT BUCKET, TRAP PRIMER CONNECTION	SEE NOTE 1
RD	ROOF DRAIN	ROOF	MIFAB SERIES R1100 LACQUERED CAST IRON DEEP SUMP ROOF DRAIN WITH 8" DIAMETER ANCHOR FLANGE LARGE CAST IRON WATERPROOFING MEMBRANE CLAMP RING AND INTEGRAL GRAVEL STOP, AND STANDARD SELF-LOCKING POLYETHYLENE DOME STRAINER WITH A COMBINED FREE AREA OF 125 SQUARE INCHES.	COORDINATE WITH GENERAL CONTRACTOR.
ORD	OVERFLOW ROOF DRAIN	ROOF	MIFAB SERIES R1100 LACQUERED CAST IRON DEEP SUMP ROOF DRAIN WITH 8" DIAMETER ANCHOR FLANGE LARGE CAST IRON WATERPROOFING MEMBRANE CLAMP RING AND INTEGRAL GRAVEL STOP, AND STANDARD SELF-LOCKING POLYETHYLENE DOME STRAINER WITH A COMBINED FREE AREA OF 125 SQUARE INCHES. (W2) - 2" INTERNAL WATER DAM.	COORDINATE WITH GENERAL CONTRACTOR.
ORD-1	DOWNSPOUT NOZZLE WITH PERFORATED COVER	ROOF	MIFAB SERIES R-1980-F-6 FABRICATED TYPE 304 STAINLESS STEEL DOWNSPOUT NOZZLE WITH HINGED PERFORATED BIRD SCREEN COVER IN STANDARD MODEL THAT WILL SLEEVE OVER THE PIPE AND EXTEND FROM THE FACE OF THE WALL 2-1/2 INCHES. (6) VANDAL PROOF & (F) FLUSH MOUNT	COORDINATE WITH GENERAL CONTRACTOR.
FCO	FLOOR CLEANOUT	FINISHED FLOORS	MIFAB MODEL C1220-3-34B DUCO CAST IRON BODY WITH ROUND ADJUSTABLE SCORIATED SECURED NICKEL BRONZE TOP, NEOPRENE GASKET SEAL, AND BRONZE CLOSURE PLUG.	
WCO	WALL CLEANOUT	FINISHED AREAS	MIFAB SERIES C1430-RHP-3-RD CAST BRONZE CLEANOUT PLUG WITH ROUND SMOOTH 6" STAINLESS STEEL ACCESS COVER AND 3-1/2" LONG ANCHOR SCREW.	
CO	CLEANOUT	UN-FINISHED AREAS	MIFAB SERIES C1430-RHP CAST BRONZE CLEANOUT PLUG.	
GCO	GROUND CLEANOUT	EXTERIOR AREAS	MIFAB MODEL C1220-3-34B DUCO CAST IRON BODY WITH ROUND ADJUSTABLE SCORIATED SECURED NICKEL BRONZE TOP, NEOPRENE GASKET SEAL, AND BRONZE CLOSURE PLUG.	PROVIDE 12"X12"X6" DEEP CONCRETE PAD
TP	TRAP PRIMER	AS SHOWN	MIFAB MODEL M2-500-NPB PRESSURE DROP ACTIVATED BRASS TRAP PRIMER SEAL, WITH INLET OPENING OF 1/2" MALE NPT AND OUTLET OPENING OF FEMALE 1/2" NPT. (NPB) - LEAD FREE MATERIAL.	
SA-A	SHOCK ARRESTOR	BUILDING	MIFAB "HAMMERGUARD" MODELS (MWH-A THRU MWH-F) PISTON OPERATED WATER HAMMER ARRESTORS, LEAD FREE. PROVIDE ON HOT & COLD WATER FIXTURE BRANCHES AT FUTURE SHOWER LOCATION IN UNISEX 3112, SIZE AS PER P.D.I. STANDARDS.	SHALL BE INSTALLED IN AN ACCESSIBLE LOCATION

NOTE:

1. PROVIDE TRAP PRIMER'S ON ALL FLOOR DRAINS.

ELEVATOR PUMP SCHEDULE

PUMP	DESCRIPTION	MAKE	MODEL	GPM	FT/HD	HP	RPM	ELECTRICAL			REMARKS
								VOLTS	PH	HZ	
EP-1	ELEVATOR PUMP	STANCOR	SE-50	74	29	0.5	3600	115	1	60	SEE DETAIL 3/P-801

PROVIDE THE FOLLOWING:
- A SIMPLEX OIL MINDER CONTROL SYSTEMS FOR EACH PUMP.
- OIL-MINDER J-BOX OPTION WITH PUMP DISCONNECT FOR THREE PHASE APLLICATIONS.
- ALL REQUIRED JUNCTION BOXES AND DISCONNECT BOXES, INCLUDING ALL REQUIRED CABLES.

Greenville
NORTH CAROLINA

JACOBS
333 Fayetteville Street, Suite 1100
Raleigh, NC 27601
PH: 919-334-3100 FX: 919-334-3122 www.jacobs.com
North Carolina Engineering Firm License No. F-287
North Carolina Architectural Firm Reg. No. 50757

AYERS SAINT GROSS

Consultants:
ARK Consulting Group, PLLC

Coaly Design
Landscape Architecture + Land Planning

Seals:

NORTH CAROLINA PROFESSIONAL SEAL 24042 ENGINEER ROBERT H. UNDER 5/9/16

General Notes:

Project Client:
Owner

GREENVILLE TRANSPORTATION ACTIVITY CENTER
600 S. Pitt Street, Greenville, NC

Number	Description	Date
0	IFC	05.10.2016

Key Plan:

Project North

CAD File:
Project No.: L3005900
Copyright: 2015 Jacobs Engineering Group

Drawing Sheet Title:
PLUMBING SCHEDULES

Drawing Sheet Number:
P-901

Owner's Drawing Sheet No.:

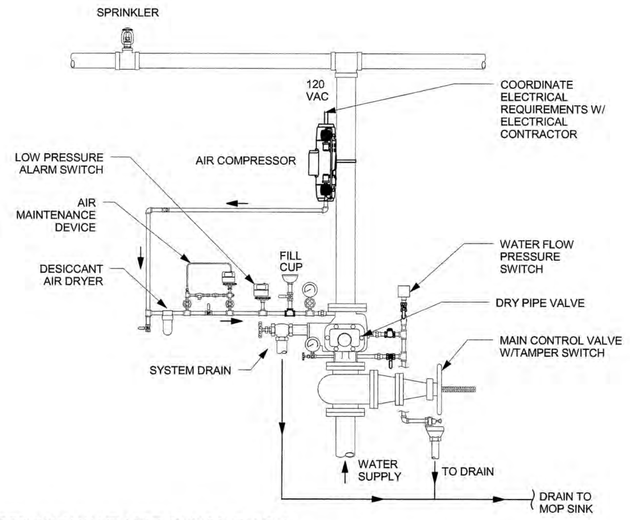

1 DRY-PIPE VALVE ASSEMBLY SCHEMATIC DIAGRAM
SCALE: NONE

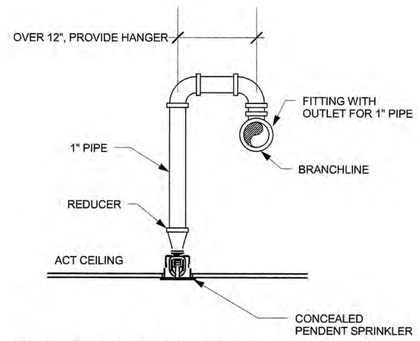

2 RETURN BEND ARRANGEMENT - CONCEALED SPRINKLER
SCALE: NONE

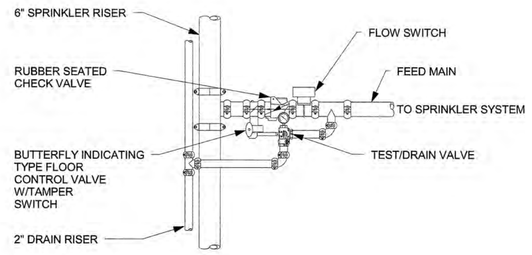

3 SPRINKLER SYSTEM FLOOR CONTROL VALVE
SCALE: NONE

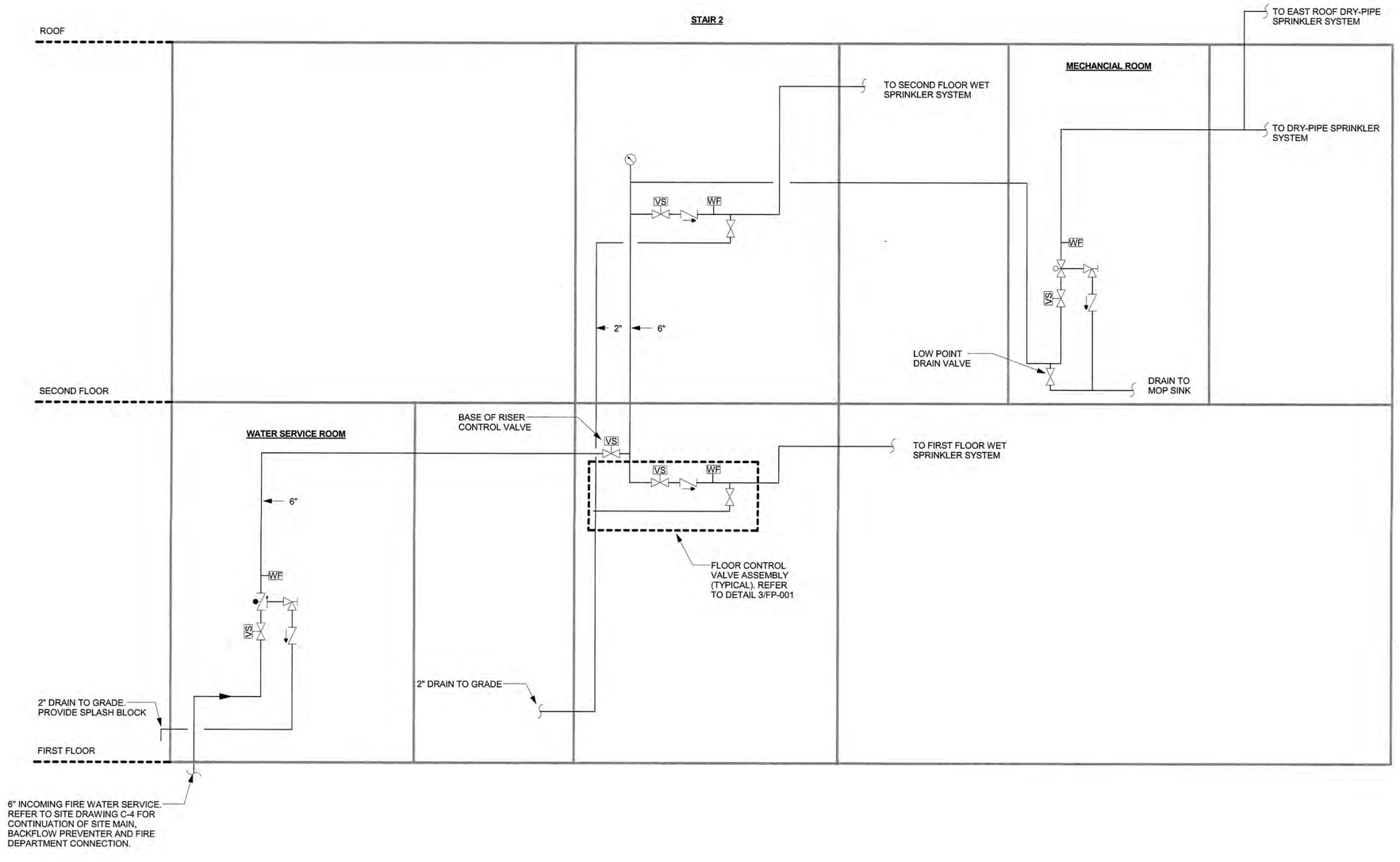

4 FIRE PROTECTION RISER DIAGRAM
SCALE: NONE

SYMBOL	DESCRIPTION
	DIRECTION OF FLOW
	PIPING CONTINUATION
	WET RISER CHECK VALVE
	VALVE
	CHECK VALVE
	DRY-PIPE SYSTEM VALVE
WF	WATERFLOW DETECTOR SWITCH
VS	VALVE WITH TAMPER SWITCH
	ANGLE VALVE
	BLIND FLANGE/PIPE CAP

NOTE: NOT ALL SYMBOLS MAY BE USED

SPRINKLER HEAD SCHEDULE

ITEM	TYPE	RESPONSE	FINISH	NOTES
A	UPRIGHT	STANDARD	BRASS	AREAS W/O CEILINGS
B	CONCEALED	QUICK	WHITE	AREAS WITH CEILINGS
C	SIDEWALL	STANDARD	BRASS	
D	DRY PENDENT	STANDARD	TEFLON COATED CORROSION RESISTANT	
E	DRY SIDEWALL	STANDARD	TEFLON COATED CORROSION RESISTANT	

NOTES:
1. PROVIDE SPRINKLER GUARDS WHERE SPRINKLERS ARE LOCATED 7 FT OR LESS AFF.
2. REFER TO ARCHITECTURAL DRAWINGS FOR CEILING INFORMATION.

SPRINKLER SYSTEM DESIGN CRITERIA

TYPE OF SYSTEM
WATER DENSITY (GPM/SQ FT)
TYPE OF SPKR (SEE SPKR HEAD SCH FOR DESCRIPTION)

AREA PROTECTED
DESIGN AREA
MAX SQ FT PER SPR HEAD

ABBREVIATIONS

AFF	ABOVE FINISHED FLOOR
APPROX	APPROXIMATE
BFP- ()	BACK FLOW PREVENTER- (TYPE)
BHP	BRAKE HORSEPOWER
℄	CENTERLINE
CO_2	CARBON DIOXIDE
COMB	COMBINATION
CONN	CONNECTION
DCH	DRY CHEMICAL
DEPT	DEPARTMENT
DESS	DELUGE SPRINKLER SYSTEM
DET	DETAIL
DEG	DEGREE
DEG F	DEGREES FAHRENHEIT
DIA	DIAMETER
DISC	DISCHARGE
DN	DOWN
DR	DRAIN
DSP	DRY STANDPIPE
DSS	DRY SPRINKLER SYSTEM
DWG	DRAWING
EA	EACH
EL	ELEVATION
ELEC	ELECTRICAL
F	FIRE MAIN - UNDERGROUND
FCVA	FLOOR CONTROL VALVE ASSEMBLY
FDC	FIRE DEPARTMENT CONNECTION
FE	FIRE EXTINGUISHER
FEC	FIRE EXTINGUISHER CABINET
FHVC	FIRE HOSE VALVE CABINET
FHR	FIRE HOSE RACK
FHV	FIRE HOSE VALVE
FLR	FLOOR
FOM	FOAM SYSTEM
FP	FIRE PUMP
FPS	FEET PER SECOND
FS	FLOW SWITCH
FSCP	FIRE SUPRESSION CONTROL PANEL
FT	FEET
GA	GAUGE
GAL	GALLON
GALV	GALVANIZED
GPM	GALLONS PER MINUTE
HAZ	HAZARDOUS
HORIZ	HORIZONTAL
HP	HORSEPOWER
HR	HOUR
HZ	HERTZ
JP	JOCKEY PUMP
KW	KILOWATT
L	LITER
LPM	LITERS PER MINUTE
MECH	MECHANICAL
MFR	MANUFACTURER
MIN	MINIMUM
NO.	NUMBER
NC	NORMALLY CLOSED
NIC	NOT IN CONTRACT
NO	NORMALLY OPEN
NTS	NOT TO SCALE
OS&Y	OUTSIDE SCREW AND YOKE
PH	PHASE
PIV	POST INDICATOR VALVE
PNTHSE	PENTHOUSE
PRESS	PRESSURE
PSI	POUNDS PER SQUARE INCH
PSIG	POUNDS PER SQUARE INCH GAUGE
PSS	PREACTION SPRINKLER SYSTEM
QR	QUICK RESPONSE
QTY	QUANTITY
RM	ROOM
SPEC	SPECIFICATION
SQ FT	SQUARE FOOT
SQ M	SQUARE METER
SPKR	SPRINKLER
SS	STAINLESS STEEL
SUCT	SUCTION
SYS	SYSTEM
TEMP	TEMPERATURE
TS	TAMPER SWITCH
TYP	TYPICAL
UNO	UNLESS NOTED OTHERWISE
V	VOLTS
W/	WITH
W/O	WITHOUT
WFS	WATER FLOW SWITCH
WSP	WET STANDPIPE
WSR	WET SPRINKLER RISER
WSS	WET SPRINKLER SYSTEM

NOTE - NOT ALL ABBREVIATIONS MAY BE USED

FIRE PROTECTION - SPRINKLER SYSTEM DESIGN CRITERIA

OCCUPANCY/AREA	TYPE OF SPRINKLER SYSTEM	NFPA OCCUPANCY CLASSIFICATION	DISCHARGE DENSITY (GPM/SQ.FT.)	AREA OF APPLICATION (SQ.FT.)	MAX. AREA PER SPRINKLER (SQ.FT.)	HOSE STREAM ALLOWANCE (GPM)
COMMON AREAS AND OFFICES	WET	LIGHT	0.10	1500	225	100
MECHANCIAL AND ELECTRICAL SPACES	WET	ORDINARY GROUP I	0.15	1500	130	250
STORAGE	WET	ORDINARY GROUP II	0.20	1500	130	250
EXTERIOR CANOPY AREA	DRY-PIPE	ORDINARY GROUP I	0.15	1950	130	250

FIRE PROTECTION - GENERAL NOTES

1. FACILITY SHALL BE FULLY SPRINKLERED IN ACCORDANCE WITH APPLICABLE CODES, AND STANDARDS.
2. FIRE PROTECTION SYSTEM MATERIALS SHALL BE UL LISTED AND FM GLOBAL APPROVED.
3. PIPING, FITTINGS, AND JOINTS SHALL BE BLACK CARBON STEEL. PIPING SHALL BE SCHEDULE 40 (2 INCH DIAMETER AND SMALLER) AND SCHEDULE 10 (2.5 INCH DIAMETER AND LARGER). DRY-PIPE SYSTEM PIPING SHALL BE HOT DIPPED GALVANIZED STEEL.
4. DO NOT RUN PIPING OVER ELECTRICAL EQUIPMENT. FOR ELECTRICAL EQUIPMENT ROOMS AND ELEVATOR MACHINE ROOMS, ONLY SPRINKLERS AND PIPING WHICH ARE DIRECTLY AND EXCLUSIVELY PROVIDING PROTECTION TO THESE SPACES MAY ENTER THESE SPACES. WHERE POSSIBLE, AVOID SPRINKLERS DIRECTLY ABOVE ELECTRICAL EQUIPMENT.
5. SPRINKLER DISCHARGE SHALL NOT BE OBSTRUCTED IN ANY WAY. WHERE OBSTRUCTIONS TO SPRINKLER DISCHARGE EXIST, LOCATE SPRINKLERS WITH RESPECT TO THESE OBSTRUCTIONS IN ACCORDANCE WITH NFPA 13.
6. DISTANCE OF SPRINKLERS FROM HEAT SOURCES AND TEMPERATURE RATING OF HEADS SHALL BE IN ACCORDANCE WITH NFPA 13.
7. PROVIDE SPRINKLERS BELOW DUCTS, DECKS, PIPES, CONDUITS, CABLE TRAYS AND OTHER OBSTRUCTIONS WHICH, INDIVIDUALLY OR IN COMBINATION, CREATE AN OBSTRUCTION WHICH IS 48 INCHES OR MORE IN WIDTH.
8. DRAINAGE SHALL BE PROVIDED IN ACCORDANCE WITH NFPA 13. ALL SPRINKLER PIPING SHALL BE INSTALLED SO THAT THE FIRE PROTECTION SYSTEMS MAY BE DRAINED. ALL DROPS TO MORE THAN ONE SPRINKLER HEAD AND ALL CHANGES IN ELEVATION THAT CREATE TRAPPED SECTIONS SHALL BE PROVIDED WITH AUXILIARY DRAINS IN ACCORDANCE WITH NFPA 13.
9. INSPECTOR'S TEST CONNECTIONS AND DRAIN DISCHARGE OUTLETS SHALL BE PIPED TO A SAFE LOCATION OUTSIDE OR AS INDICATED SO THAT TEST VALVE MAY BE FULLY OPENED FOR A SUFFICIENT AMOUNT OF TIME WITHOUT CAUSING WATER DAMAGE. PROVIDE CONCRETE SPLASH BLOCK AT ALL TEST CONNECTION/DRAIN DISCHARGE POINTS.

Greenville
NORTH CAROLINA

JACOBS
333 Fayetteville Street, Suite 1100
Raleigh, NC 27601
PH: 919-334-3100 FX: 919-334-3122 www.jacobs.com
North Carolina Engineering Firm License No. F-267
North Carolina Architectural Firm Reg. No. 50757

AYERS SAINT GROSS

Consultants:
ARK Consulting Group, PLLC

Coaly Design
Landscape Architecture + Land Planning

Seals:

NORTH CAROLINA PROFESSIONAL SEAL 24042 ENGINEER ROBERT H. UNGER 5/11/16

General Notes:

Project Client:
Owner

GREENVILLE TRANSPORTATION ACTIVITY CENTER
600 S. Pitt Street, Greenville, NC

Number	Description	Date
0	IFC	05.10.2016

Key Plan:

Project North

CAD File:
Project No.: L3005900
Copyright: 2015 Jacobs Engineering Group

Drawing Sheet Title:
FIRE PROTECTION SYMBOLS, ABBREVIATIONS, GENERAL NOTES & DETAILS

Drawing Sheet Number:
FP-001

Owner's Drawing Sheet No.:

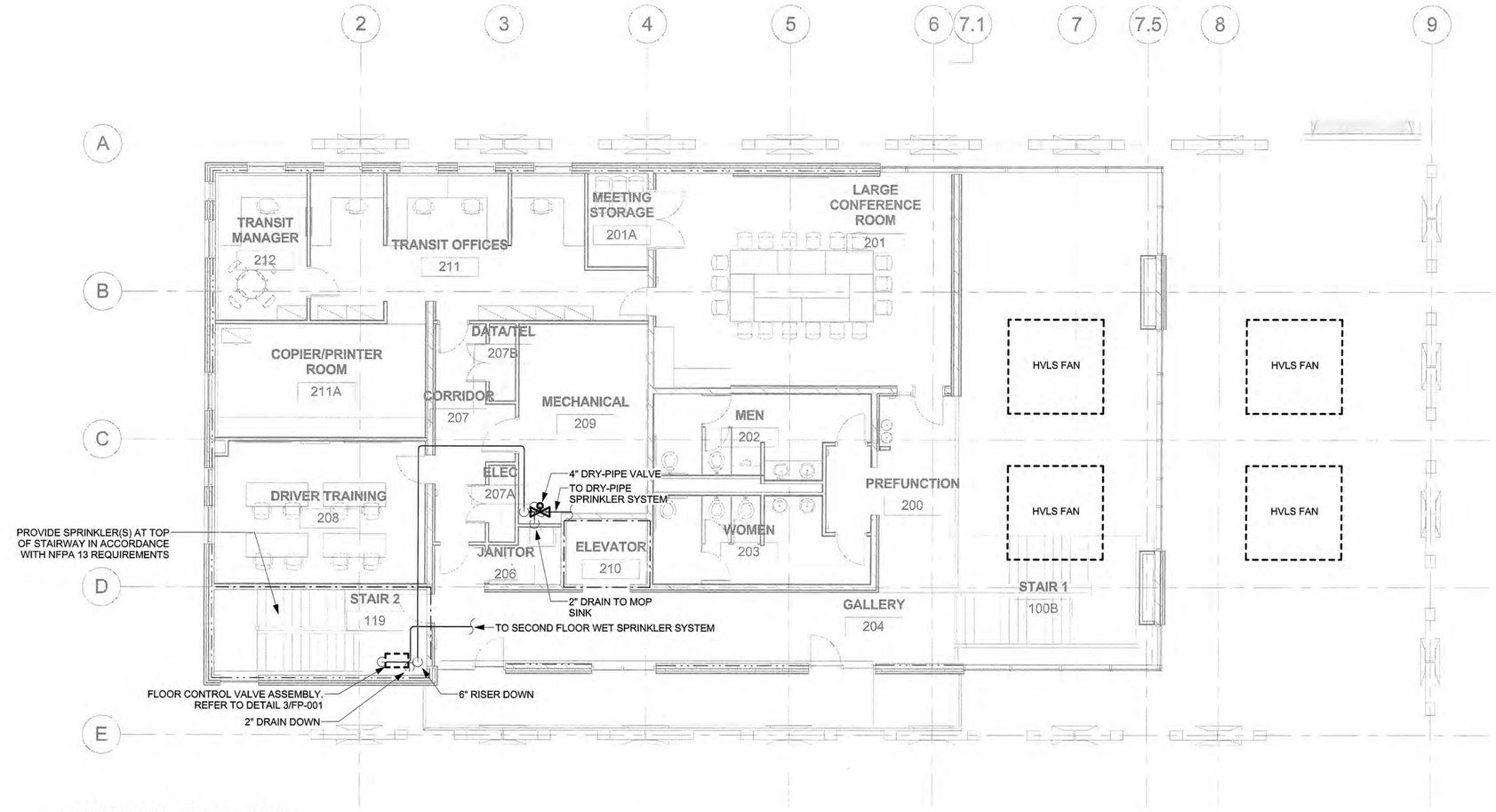

2 SECOND FLOOR FIRE PROTECTION PLAN
1/8" = 1'-0"

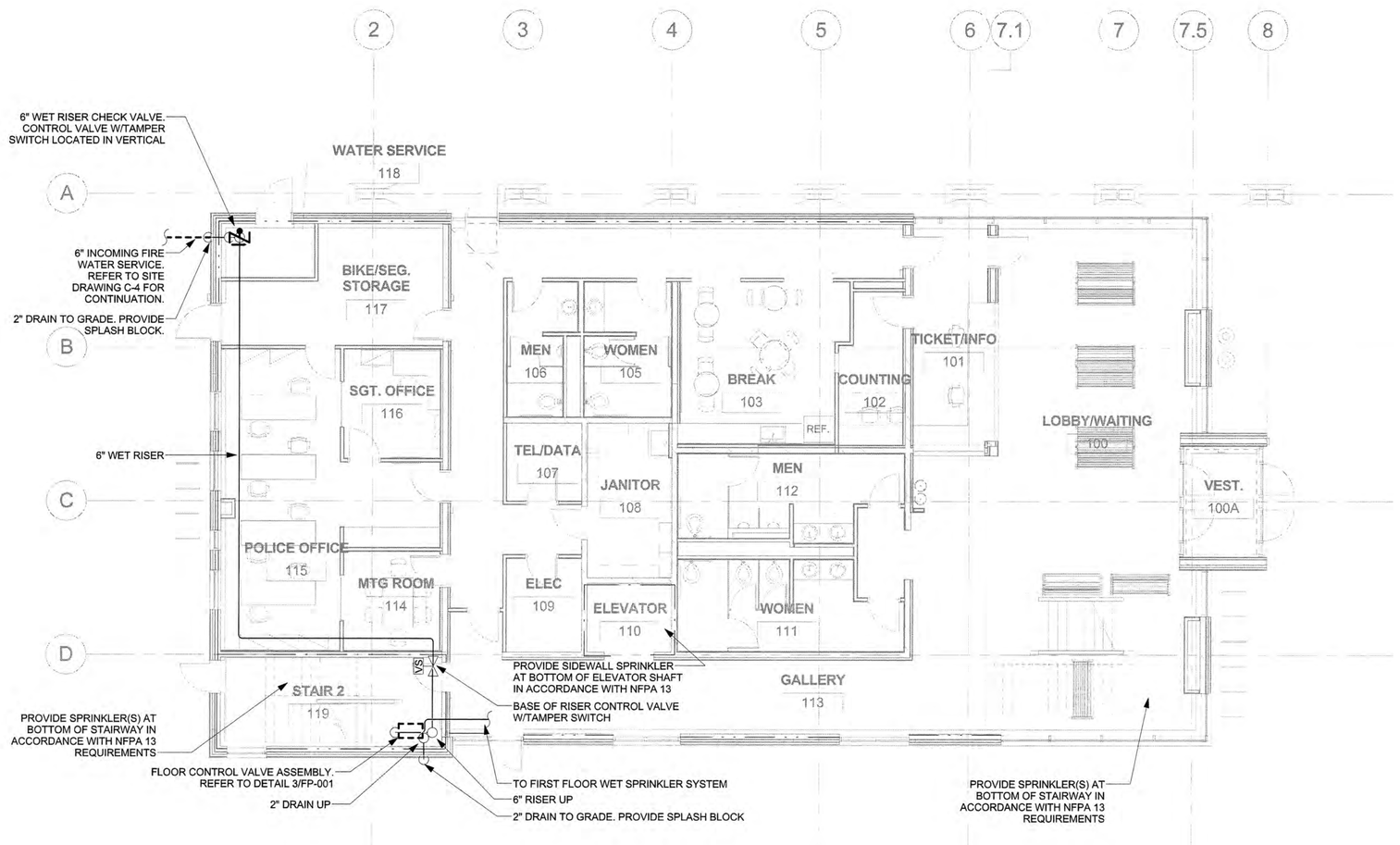

1 FIRST FLOOR FIRE PROTECTION PLAN
1/8" = 1'-0"

Greenville
NORTH CAROLINA

JACOBS
333 Fayetteville Street, Suite 1100
Raleigh, NC 27601
PH: 919-334-3100 FX: 919-334-3122 www.jacobs.com
North Carolina Engineering Firm License No. F-287
North Carolina Architectural Firm Reg. No. 50757

AYERS SAINT GROSS

Consultants:
ARK Consulting Group, PLLC

Coaly Design
Landscape Architecture + Land Planning

Seals:

NORTH CAROLINA PROFESSIONAL SEAL 24042 ENGINEER ROBERT H. UNGER 5/11/16

General Notes:

1. ALL SPACES ON THIS SHEET ARE TO BE PROTECTED WITH AUTOMATIC SPRINKLER PROTECTION DESIGNED IN ACCORDANCE WITH THE CRITERIA DETAILED ON SHEET FP-001
2. HIGH VOLUME LOW SPEED (HVLS) FANS SHALL CONFORM TO THE FOLLOWING REQUIREMENTS AS DETAILED IN NFPA 13:
   A. THE HVLS FAN SHALL BE CENTERED APPROXIMATELY BETWEEN FOUR ADJACENT SPRINKLERS.
   B. THE VERTICAL CLEARANCE FROM THE HVLS FAN TO SPRINKLER DEFLECTOR SHALL BE A MINIMUM OF 3FT.
   C. ALL HVLS FANS SHALL BE INTERLOCKED TO SHUT DOWN IMMEDIATELY UPON RECEIVING A WATERFLOW SIGNAL FROM THE ALARM SYSTEM IN ACCORDANCE WITH NFPA 72.
3. REFER TO ARCHITECTURAL DRAWING A-302 FOR SCHEMATIC DRY-PIPE SYSTEM ROUTING AND SPRINKLER LOCATIONS BELOW EXTERIOR ROOF

Project Client:
Owner

GREENVILLE TRANSPORTATION ACTIVITY CENTER
600 S. Pitt Street, Greenville, NC

Number	Description	Date
0	IFC	05.10.2016

Key Plan: Project North

CAD File:
Project No.: L3005900
Copyright: 2015 Jacobs Engineering Group

Drawing Sheet Title:
FIRE PROTECTION FLOOR PLANS

Drawing Sheet Number:
FP-101

Owner's Drawing Sheet No.:

LIGHTING SYMBOLS	
F1 RP5-7 R-8	TYPICAL LUMINAIRE DESIGNATIONS (F1) INDICATES LUMINAIRE TYPE. REFER TO LUMINAIRE SCHEDULE FOR DESCRIPTION. (RP5-7) INDICATES CIRCUIT, (RP5) PANEL DESIGNATION AND (7) CIRCUIT BREAKER NUMBER. (R-8) INDICATES RELAY FOR LUMINAIRES SWITCHED VIA RELAY CONTROL PANEL. REFER TO 'RCP' SCHEDULE. PROVIDE 20A/1P AND 2#12 FOR EACH CIRCUIT NUMBER & 1#12G, IN 3/4" CONDUIT, UNLESS OTHERWISE INDICATED, SEE GENERAL NOTE 1.
	FLUORESCENT LUMINAIRE
	CEILING OR WALL MOUNTED LUMINAIRE
	INDUSTRIAL TYPE FLUORESCENT LUMINAIRE
	PENDANT MOUNTED LUMINAIRE
	LUMINAIRE POWERED BY EMERGENCY SOURCE (TYPICAL)
	SITE LIGHTING LUMINAIRE, POLE MOUNTED
	SITE LIGHTING LUMINAIRE, GROUND
E	INDUSTRIAL TYPE FLUORESCENT LUMINAIRE POWERED BY EMERGENCY SOURCE
	WALL MOUNTED EXIT SIGN, SHADED AREAS INDICATE NUMBER OF FACES, DIRECTION ARROWS AS INDICATED
	CEILING MTD. EXIT SIGN, SHADED AREAS INDICATE NUMBER OF FACES, DIRECTION ARROWS AS INDICATED
	EMERGENCY BATTERY UNIT LUMINAIRE
	CONTROL COIL
P	PHOTO CELL

RECEPTACLE SYMBOLS	
RP5-7 R-8	TYPICAL RECEPTACLE CIRCUIT DESIGNATION (RP5-7) INDICATES CIRCUIT, (RP5) PANEL DESIGNATION AND (7) CIRCUIT BREAKER NUMBER. (R-8) INDICATES RELAY FOR RECEPTACLES SWITCHED VIA RELAY CONTROL PANEL. REFER TO 'RCP' SCHEDULE. PROVIDE 20A/1P AND 2#12 FOR EACH CIRCUIT NUMBER & 1#12G, IN 3/4" CONDUIT, UNLESS OTHERWISE NOTED OR SCHEDULED, SEE GENERAL NOTE 1.
	DUPLEX RECEPTACLE, 125V, 20A, 2P, 3W NEMA 5-20R
GFI	DUPLEX RECEPTACLE, 125V, 20A, 2P, 3W, NEMA 5-20R, (GROUND FAULT CIRCUIT INTERRUPTER)
	SINGLE RECEPTACLE, 125V, 20A, 2P, 3W NEMA 5-20R
	CLOCK HANGER SINGLE RECEPTACLE, 125V, 20A, 2P, 3W NEMA 5-20R
	DOUBLE DUPLEX RECEPTACLE, 125V, 20A, 2P, 3W NEMA 5-20R
IG	ISOLATED GROUND DUPLEX RECEPTACLE, 125V, 20A, 2P, 3W
TC	TIME CLOCK CONTROLLED DUPLEX RECEPTACLE, 125V, 20A, 2P, 3W
A	SINGLE RECEPTACLE, 125V, 30A, 2P, 3W NEMA 5-30R
B	SINGLE RECEPTACLE, 250V, 20A, 2P, 3W NEMA L6-20R
C	SINGLE RECEPTACLE, 250V, 30A, 2P, 3W NEMA 6-30R
D	SINGLE RECEPTACLE, 125/250V, 20A, 3P, 4W NEMA 14-20R
E	SINGLE RECEPTACLE, 125/250V, 30A, 3P, 4W NEMA 14-30R
F	SINGLE RECEPTACLE, 125/250V, 50A, 3P, 4W NEMA 14-50R
G	SINGLE RECEPTACLE, 250V, 20A, 3P, 4W NEMA 15-20R
H	SINGLE RECEPTACLE, 250V, 30A, 3P, 4W NEMA 15-30R
	BENCH TOP PEDESTAL OUTLET, SINGLE FACE, RECEPTACLE TYPE AS INDICATED
	BENCH TOP PEDESTAL OUTLET, DOUBLE FACE, RECEPTACLE TYPE AS INDICATED
	RAISED FLOOR POWER OUTLET MOUNTED IN RAISED FLOOR. TYPE AS INDICATED.
	RAISED FLOOR COMBINATION OUTLET WITH TELE/DATA/POWER MOUNTED IN RAISED FLOOR. TYPE AS INDICATED
	CONCRETE FLOOR BOX WITH POWER OUTLET. TYPE AS INDICATED.
	CONCRETE COMBINATION FLOOR BOX WITH TELE/DATA/POWER OUTLETS. TYPE AS INDICATED.

RECEPTACLE NOTES:

1. "L" NEXT TO RECEPTACLE INDICATES LOCKING TYPE (E.G. H NEMA L6-30R) CL

ELECTRICAL SYMBOLS	
	HARD-WIRED CONNECTION
JB / JB	JUNCTION BOX
	PANELBOARD
	DISTRIBUTION/POWER PANEL
	MOTOR CONNECTION
3/30	DISCONNECT SWITCH (3/30 = POLE/AMP)
3/30/25	FUSED DISCONNECT SWITCH (3/30/25 = POLE/AMP/FUSE)
	COMBINATION MAGNETIC MOTOR STARTER
CB	ENCLOSED CIRCUIT BREAKER
T1	TRANSFORMER, (SEE TRANSFORMER SCHEDULE ON COVER SHEET 2)
T30	CEILING MOUNTED TRANSFORMER
	EMERGENCY POWER OFF
	GROUND ROD
	GROUND BUS
	LIGHTNING PROTECTION THROUGH ROOF DOWN CONDUCTOR
	LIGHTNING PROTECTION AIR TERMINAL
	START STOP PUSHBUTTON
	RAISE-LOWER PUSHBUTTON WITH CENTER STOP
	PUSH-PLATE FOR AUTOMATIC DOOR
	POWER POLE
VFD	VARIABLE FREQUENCY DRIVE
VFD BP	VARIABLE FREQUENCY DRIVE WITH BYPASS
F F	FIRE RATED THRU-FLOOR FITTING FOR TEL/DATA/POWER TO DEMOUNTABLE PARTITION, WITH WHIP. WHIP FURNISHED BY OTHERS, AND INSTALLED BY DIV. 16. (F) INDICATES FLUSH MOUNTED.
	WALL MOUNTED JUNCTION BOX FOR TEL/DATA/PWR TO DEMOUNTABLE PARTITION WITH WHIP. WHIP FURNISHED BY OTHERS, AND INSTALLED BY DIV. 16.
F F	FIRE RATED THROUGH-FLOOR FITTING WITH DEVICE AS INDICATED. (F) INDICATES FLUSH MOUNTED.
	EQUIPMENT IDENTIFICATION TAGS
	MULTI-OUTLET RACEWAY WITH RECEPTACLE. TYPE AND CIRCUIT DESIGNATION AS INDICATED
	WIRE/CONDUIT EXPOSED
	WIRE/CONDUIT CONCEALED
	WIRE/CONDUIT CONCRETE ENCASED OR DIRECT BURIED
G	GROUNDING CONDUCTOR, SIZE AS INDICATED.
2W20 (20/2) RP5-7,9	HOME RUN INDICATION WITH PANEL DESIGNATION (RP5), CIRCUIT No.(7&9), OVERCURRENT PROTECTION "AMPS AND POLES" (20/2) AND WIRE/CONDUIT DESIGNATION (2W20). SEE WIRE AND CONDUIT SIZE SCHEDULE. PROVIDE 20A/1P AND 2 #12 FOR EACH HOMERUN ARROW & 1 #12G IN 3/4 " CONDUIT, UNLESS OTHERWISE INDICATED. SEE GENERAL NOTE 1.
E	UNDERGROUND DUCT BANK - ELECTRIC
TC	UNDERGROUND DUCT BANK - COMMUNICATION/DATA/TELEPHONE
MH	MANHOLE
HH	HANDHOLE
1 MI CABLE,1/C	(1) MI CABLE, SINGLE CONDUCTOR
1 MI CABLE,3/C	(1) MI CABLE, THREE CONDUCTOR
3 MI CABLES,1/C	(3) MI CABLES, SINGLE CONDUCTOR EACH

SINGLE LINE DIAGRAM SYMBOLS	
	DRAWOUT CIRCUIT BREAKER OVER 600V
	DRAWOUT CIRCUIT BREAKER
	DRAWOUT FUSES
	CIRCUIT BREAKER
	FUSED DISCONNECT SWITCH
	DISCONNECT SWITCH
	FUSED DRAWOUT CIRCUIT BREAKER
	FUSE
	CONTACT
50N 51N	RELAY SEE RELAY SCHEDULE ON COVER SHEET 2.
	POWER TRANSFORMER WITH VOLTAGES AS INDICATED
	SHIELDED K RATED POWER TRANSFORMER WITH VOLTAGES AS INDICATED
EO	DRAWOUT CIRCUIT BREAKER, ELECTRIC OPERATED.
EO	CIRCUIT BREAKER, ELECTRIC OPERATED.
E0	FUSED DISCONNECT SWITCH, ELECTRIC OPERATED.
400/5 3	CURRENT TRANSFORMER, QUANTITY AND RATIO AS INDICATED.
50/5	GROUND CURRENT, ZERO SEQUENCE TYPE TRANSFORMER. RATIO AS INDICATED.
1	POTENTIAL TRANSFORMER, QUANTITY AS INDICATED.
1	DRAWOUT POTENTIAL TRANSFORMER, QUANTITY AS INDICATED.
LA	LIGHTNING ARRESTOR
	TRANSFORMER CONNECTION DELTA-RESISTANCE GROUNDED WYE
	TRANSFORMER CONNECTION DELTA-GROUNDED WYE
	STATIC BYPASS SWITCH
GEN	GENERATOR
N E L	AUTOMATIC TRANSFER SWITCH
N E L	AUTOMATIC TRANSFER AND BYPASS ISOLATION SWITCH
	PANELBOARD
	POWER FACTOR CORRECTION CAPACITOR

	GROUND CONNECTION
	THERMAL OVERLOADS
K	KEY INTERLOCK
E	ELECTRIC INTERLOCK
SPD	SURGE PROTECTION DEVICE
AM	AMMETER
AS	AMMETER SWITCH
VM	VOLTMETER
VS	VOLTMETER SWITCH
WM	WATTMETER
KWH	KILOWATT-HOUR METER WITH 15 MIN. DEMAND REGISTER
KVH	KILOVAR HOUR METER
PF	POWER FACTOR METER
TB	TERMINAL BLOCK
CS	CONTROL SWITCH
M	MULTIFUNCTION METER AS SPECIFIED.
	BATTERY
A	FEEDER CONNECTION REFERENCE

COMMUNICATION SYMBOLS	
	DATA OUTLET BOX WITH (TWO) JACKS DOUBLE GANG BOX WITH SINGLE GANG REDUCER AND 1"C TO ACCESSIBLE CEILING AREA
W	SINGLE GANG BOX WITH WALL PHONE PLATE AND 3/4 "C TO ACCESSIBLE CEILING AREA.
VMB	VISUAL MESSAGE BOARD (1) CAT 6 CABLE
	CEILING MOUNTED DATA OUTLET
	MULTI-OUTLET RACEWAY WITH DATA/TELE OUTLETS AS INDICATED
	FLOOR TELE/DATA OUTLET MOUNTED IN FLOOR. TYPE AS INDICATED.
	CONCRETE FLOOR BOX WITH TELE/DATA OUTLET. TYPE AS INDICATED.
S	PUBLIC ADDRESS SPEAKER
S	PUBLIC ADDRESS SPEAKER WALL MOUNTED
C	SINGLE FACE CLOCK
C D	DOUBLE FACE CLOCK
	HORN
TV	TEVEVISION
M	MONITOR

SECURITY SYMBOLS	
	CCTV FIXED CAMERA
PTZ	CCTV PAN, TILT, ZOOM
CR	CARD READER
PB	PANIC BUTTON

SWITCH SYMBOLS	
S	SINGLE POLE SWITCH, 20A, 120-277VAC
S_3	THREE-WAY SWITCH, 20A, 120-277VAC
S_4	FOUR-WAY SWITCH 20A, 120-277VAC
S_M	MANUAL MOTOR STARTER SWITCH
S_{MOL}	MANUAL MOTOR STARTER WITH THERMAL OVERLOADS
S_D	DIMMER CONTROL
S_P	SINGLE POLE SWITCH WITH PILOT LIGHT
S_K	SINGLE POLE SWITCH (KEY-OPERATED)
S_a	SINGLE POLE SWITCH (LETTER INDICATES SWITCH CONTROL OF A SPECIFIC CIRCUIT)
S_T	SINGLE POLE SWITCH WITH TIMER
S_{3P}	THREE-POSITION SWITCH, CENTER-OFF, MOMENTARY CONTACT
S_L	THREE POSITION MOMENTARY CONTACT, CENTER OFF LOW VOLTAGE SWITCH (USED TO OVERRIDE MOTOR OPERATED CIRCUIT BREAKERS)
S_{OR}	OVER-RIDE SWITCH (LOW VOLTAGE) SINGLE BUTTON EACH LOCATION, ENGRAVED "LIGHTING OVERRIDE" OR "POWER OVERRIDE"
S_{OS}	OCCUPANCY SENSOR WALL SWITCH, SENSOR SWITCH WSX PDT OR APPROVED EQUAL
S_{LV}	LOW VOLTAGE WALL SWITCH FOR USE WITH LOW VOLTAGE CEILING MOUNTED OCCUPANCY SENSORS SENSOR SWITCH SPODM, NUMBER INDICATES CHANNELS
S_{nOS}	OCCUPANCY SENSOR WALL SWITCH nLIGHT nWSX PDT LV OR APPROVED EQUAL
S_{nOSD}	OCCUPANCY SENSOR WALL DIMMING SWITCH nLIGHT nWSX PDT LV DX OR APPROVED EQUAL
S_n	LOW VOLTAGE SINGLE WALL SWITCH FOR USE WITH LOW VOLTAGE LIGHT FIXTURE MOUNTED OCCUPANCY SENSORS nLIGHT nPODM DX
S_{n2P}	LOW VOLTAGE TWO CHANNEL WALL SWITCH FOR USE WITH LOW VOLTAGE LIGHT FIXTURE MOUNTED OCCUOANCY SENSORS nLIGHT nPODM 2P DX
OS	OCCUPANCY SENSOR MOUNTED IN CEILING, SENSOR SWITCH CMPDT 9 OR APPROVED EQUAL
OS_A	OCCUPANCY SENSOR MOUNTED IN CEILING, nLIGHT nCM PDT 9 RJB OR APPROVED EQUAL
OS_B	OCCUPANCY SENSOR MOUNTED IN CEILING, WATT STOPPER (ULTRASONIC) WT-2250 OR APPROVED EQUAL
OS_C	OCCUPANCY SENSOR MOUNTED IN CEILING, WATT STOPPER (INFRARED) CI-205-1 OR APPROVED EQUAL
PP	CIRCUIT CONTROL UNIT ("POWER PACK"), SENSOR SWITCH PP20, PP20 2P OR SP20, UNLESS NOTED OTHERWISE.

OCCUPANCY SENSOR NOTES:

1. PLACE ULTRASONIC SENSORS 6'-0" AWAY FROM SUPPLY AND RETURN VENTS.

GENERAL NOTES:

1. PROVIDE EACH 120V, 20A BRANCH CIRCUIT FROM LIGHTING AND APPLIANCE PANELBOARDS WITH A SEPARATE NEUTRAL FOR EACH PHASE CONDUCTOR. NO SHARED NEUTRALS ARE PERMITTED UNLESS OTHERWISE INDICATED. BRANCH CIRCUIT HOME RUN WIRING MAY BE COMBINED UP TO MAXIMUM OF (9) CURRENT CARRYING CONDUCTORS IN A CONDUIT SIZED PER NFPA 70. NEUTRALS SHALL BE INCLUDED AS CURRENT CARRYING CONDUCTORS.
2. THESE ARE STANDARD COVER SHEET ABBREVIATION LISTS AND SYMBOLS. DISREGARD UNUSED ABBREVIATIONS AND SYMBOLS.
3. REFER TO ARCHITECTURAL REFLECTED CEILING PLANS FOR LUMINAIRE LOCATONS.
4. ELECTRICAL CONTRACTOR SHALL COORDINATE LOCATION OF LUMINAIRES WITH OTHER TRADES.
5. FOR LOCATION OF MECHANICAL EQUIPMENT, REFER TO MECHANICAL PLANS.
6. A '+' BESIDE A DEVICE INDICATES MOUNTED ABOVE CASEWORK OR COUNTER. A 'UC' BESIDE A DEVICE INDICATES MOUNTED UNDER COUNTER.
7. PROVIDE N0 10 AWG PHASE, NEUTRAL, AND GROUND CONDUCTORS FOR 120 VOLT, 20 AMPERE BRANCH CIRCUITS EXCEEDING 100 FEET AND FOR 277 VOLT, 20 AMPERE CIRCUITS EXCEEDING 200 FEET.
8. ALL ELECTRICAL EQUIPMENT SHALL MEET ANSI ICC A117.1 AND CHAPTER 11 NCSBC FOR PUBLIC AND ACCESSIBLE AREAS.

Greenville NORTH CAROLINA

JACOBS

333 Fayetteville Street, Suite 1100
Raleigh, NC 27601
PH: 919-334-3100 FX: 919-334-3122 www.jacobs.com
North Carolina Engineering Firm License No. F-287
North Carolina Architectural Firm Reg. No. 50757

AYERS SAINT GROSS

Consultants:

ARK Consulting Group, PLLC

Coaly Design
Landscape Architecture + Land Planning

Seals:

NORTH CAROLINA PROFESSIONAL ENGINEER SEAL 025683 5-17-16 MARK WILLIS

General Notes:

Project Client:
Owner

GREENVILLE TRANSPORTATION ACTIVITY CENTER
600 S. Pitt Street, Greenville, NC

Number	Description	Date
0	IFC	05.10.2016

Key Plan: Project North

CAD File:
Project No.: L3005900
Copyright: 2015 Jacobs Engineering Group

Drawing Sheet Title:
ELECTRICAL SYMBOLS

Drawing Sheet Number:
E-001

Owner's Drawing Sheet No.:

ABBREVIATIONS

A,AMP	AMPERE(S)
AC	ALTERNATING CURRENT
AF	AMPERE FRAME (CIRCUIT BREAKER)
AFF	ABOVE FINISHED FLOOR
AFG	ABOVE FINISHED GRADE
AFU	AMPERE FUSE
AHU	AIR HANDLING UNIT
AIC	AMPERE INTERRUPTING CAPACITY
AL	ALUMINUM
AS	AMMETER SWITCH
AM	AMMETER
AT	AMPERE TRIP (CIRCUIT BREAKER)
ATS	AUTOMATIC TRANSFER SWITCH
AUX	AUXILIARY
A/V	AUDIO VISUAL
AWG	AMERICAN WIRE GAUGE
BAS	BUILDING AUTOMATION SYSTEM
BKR	BREAKER
BLDG	BUILDING
BP	BYPASS
BSC	BIOLOGICAL SAFETY CABINET
C	CONDUCTOR
C/ CDT	CONDUIT
CATV	CABLE TELEVISION
CB	CIRCUIT BREAKER
CCTV	CLOSED CIRCUIT TELEVISION
CKT	CIRCUIT
CLG	CEILING
CO	CONDUIT ONLY
COAX	COAXIAL CABLE
COL	COLUMN
COMM	COMMUNICATIONS
CP	CONTROL PANEL
CPT	CONTROL POWER TRANSFORMER
CPU	CENTRAL PROCESSING UNIT
CR	CARD READER
CRT	CATHODE RAY TUBE MONITOR
CS	CONTROL SWITCH
CU	COPPER
CUH	CABINET UNIT HEATER
CT	CURRENT TRANSFORMER
D	DEPTH
DC	DIRECT CURRENT
DDC	DIRECT DIGITAL CONTROL
DEMO	DEMOLITION
DIA	DIAMETER
DN	DOWN
DISC	DISCONNECT
DIST	DISTRIBUTION
DWG	DRAWING
E	ELECTRIC / EMERGENCY
EC	ELECTRICAL CONTRACTOR, EMPTY CONDUIT
EF	EXHAUST FAN
EL	ELEVATION
ELECT,ELEC	ELECTRICAL
ELEV	ELEVATOR
EMT	ELECTRICAL METALLIC TUBING
EO	ELECTRICALLY OPERATED
EOL	END OF LINE DEVICE
EPO	EMERGENCY POWER OFF
EQ	EQUAL
EQUIP	EQUIPMENT
ER	EXISTING TO BE RELOCATED
EWC	ELECTRIC WATER COOLER
EX	EXISTING TO REMAIN
F	FLUSH
FA	FIRE ALARM
FCC	FIRE COMMAND CENTER
FCU	FAN COIL UNIT
FDDI	FIBER DISTRIBUTED DATA INTERFACE
FDR	FEEDER
FH	FUME HOOD
FIP	FIELD INTERFACE PANEL
FIXT	FIXTURE
FLA	FULL LOAD AMPERES
FLR,FL	FLOOR
FLUOR	FLUORESCENT
FO	FIBER OPTIC
FPB	FAN POWERED BOX
FU	FUSE
FUT	FUTURE
FVR	FULL VOLTAGE REVERSIBLE
FVNR	FULL VOLTAGE NON REVERSIBLE
G	GROUND (CONDUCTOR)
GA	GAUGE
GEN	GENERATOR
GF	GROUND FAULT
GFI	GROUND FAULT CIRCUIT INTERRUPTER
GND,GRD	GROUND
GPS	GENERATOR PARALLELING SWITCHGEAR
GRC	GALVANIZED RIGID STEEL CONDUIT
HH	HAND HOLE
HID	HIGH INTENSITY DISCHARGE
HOA	HAND-OFF-AUTOMATIC SWITCH
HP	HORSEPOWER
HT	HEIGHT
HWP	HOT WATER PUMP
HV	HIGH VOLTAGE
HZ	HERTZ
I/INST	INSTANTANEOUS
ICM	INTERCOM MASTER
ICR	INTERCOM REMOTE
IG	ISOLATED GROUND
IMC	INTERMEDIATE METAL CONDUIT
INSTR	INSTRUMENT/INSTRUMENTATION
IP	INTERNET PROTOCOL
JB,JBOX	JUNCTION BOX
K	KEY LOCK (KEY INTERLOCK SCHEME)
KA	KILOAMPERES
KCM	THOUSAND CIRCULAR MILS
KEF	KITCHEN EXHAUST FAN
KW	KILOWATTS
KWH	KILOWATT HOUR
KV	KILOVOLTS
KVA	KILO VOLT-AMPERES
KVAR	KVA REACTIVE
L	LOCKING TYPE/LOAD
LA	LIGHTNING SURGE ARRESTER
LAB	LABORATORY
LAN	LOCAL AREA NETWORK
LT	LONG TIME
LTG	LIGHTING
LP	LIGHTING PANEL

ABBREVIATIONS

M	METER
mm	MILLIMETER
mm2	MILLIMETERS SQUARED
MAX	MAXIMUM
MCB	MAIN CIRCUIT BREAKER
MCC	MOTOR CONTROL CENTER
MCCB	MOLDED CASE CIRCUIT BREAKER
MDF	MAIN DISTRIBUTION FRAME
MECH	MECHANICAL
MFR	MANUFACTURER
MH	MANHOLE
MI	MINERAL-INSULATED
MIN	MINIMUM
MIC	MEDIA INTERFACE CONNECTOR
MIN	MINIMUM
MLO	MAIN LUGS ONLY
MPS	MANUAL PULL STATION
MTD	MOUNTED
MTG	MOUNTING
MTS	MANUAL TRANSFER SWITCH
MV	MEDIUM VOLTAGE
N	NEUTRAL/NORMAL
NEC	NATIONAL ELECTRICAL CODE
NC	NORMALLY-CLOSED
NIC	NOT IN CONTRACT
NO	NORMALLY-OPEN / NUMBER
NORM	NORMAL
NTS	NOT TO SCALE
NWP	NETWORK PROTECTOR
NVR	NETWORK VIDEO RECORDER
OCB	OIL CIRCUIT BREAKER
OL	OVERLOAD(S)
OC	ON-CENTER
OS	OCCUPANCY SENSOR
P	POLE
PA	PUBLIC ADDRESS SYSTEM
PB	PUSHBUTTON/PULLBOX
PBX	PRIVATE BRANCH EXCHANGE
PC	PHOTOCELL
PDU	POWER DISTRIBUTION UNIT
PF	POWER FACTOR
PFCC	POWER FACTOR CORRECTION CAPACITORS
PH,Ø	PHASE
PNL	PANEL
POE	POWER OVER ETHERNET
PP	POWER PANEL
PR	PAIR
PRI	PRIMARY
PT	POTENTIAL TRANSFORMER
PVC	POLYVINYLCHLORIDE
PWR	POWER
QTY	QUANTITY
RE	REMOVE EXISTING
REC,RECPT	RECEPTACLE
REPO	REMOTE E.P.O.
REQ,REQD	REQUIRED
RF	RETURN FAN
RIM	READER INTERFACE MODULE
RM	ROOM
RO	REVERSE-OSMOSIS
RP	RECEPTACLE PANEL
RVAT	REDUCED VOLTAGE AUTOTRANSFORMER
RTU	REMOTE TERMINAL UNIT
RUPS	ROTARY UPS
SCA	SHORT CIRCUIT AMPERES
SD	SMOKE DETECTOR
SEC	SECONDARY
SF	SUPPLY FAN
SF6	SULFERHEXAFLORIDE
SPD	SURGE PROTECTIVE DEVICE
SPEC	SPECIFICATION
SPKR	SPEAKER
SS	STAINLESS STEEL/SOLID STATE
ST	SHUNT TRIP/SHORT TIME
STD	STANDARD
STP	SHIELDED TWISTED PAIR
STS	STATIC TRANSFER SWITCH
SW	SWITCH
SWBD	SWITCHBOARD
SWGR	SWITCHGEAR
SYM	SYMMETRICAL
SYS	SYSTEM
T	TRANSFORMER
TB	TERMINAL BLOCK
TCP	TELECOMMUNICATIONS
TELECOM	TRANSMISSION CONTROL PROTOCOL
TDR	TIME DOMAIN REFLECTOMETER
TEF	TOILET EXHAUST FAN
TEL,TELE	TELEPHONE
TR	TELECOM ROOM
TV	TELEVISION
TVSS	TRANSIENT VOLTAGE SURGE SUPPRESSION
TYP	TYPICAL
UC	UNDER-COUNTER
UH	UNIT HEATER
UL	UNDERWRITERS LABORATORY
UNO	UNLESS NOTED OTHERWISE
UON	UNLESS OTHERWISE NOTED
UPS	UNINTERRUPTIBLE POWER SUPPLY
UTP	UNSHIELDED TWISTED PAIR
V	VOLT(S)
VA	VOLT-AMPERES
VAV	VARIABLE AIR VOLUME BOX
VFD	VARIABLE FREQUENCY DRIVE
VM	VOLTMETER
VS	VOLTMETER SWITCH
W/	WITH
W	WIRE/WATT/ WIDTH
WCR	WITHSTAND CURRENT RATING
WM	WATTMETER
WP	WEATHERPROOF
WT	WATERTIGHT
XFMR	TRANSFORMER
XP	EXPLOSION-PROOF
ZI	ZONE INTERLOCKING
ΔY	DELTA-WYE
2S2W	TWO SPEED TWO WINDING
2SR2W	TWO SPEED REVERSING TWO WINDING

COPPER WIRE AND CONDUIT SCHEDULE

(3) WIRE		(4) WIRE		(2) AND (5) WIRE	
SYMBOL	(3) WIRE & GROUND, CONDUIT	SYMBOL	(4) WIRE & GROUND, CONDUIT	SYMBOL	(2) AND (5) WIRE & GROUND, CONDUIT
3W20	3 #12 & 1 #12G, 3/4"C.	4W20	4 #12 & 1 #12G, 3/4"C.	2W20	2 #12 & 1 #12G, 3/4"C.
3W30	3 #10 & 1 #10G, 3/4"C.	4W30	4 #10 & 1 #10G, 3/4"C.	2W30	2 #10 & 1 #10G, 3/4"C.
3W35	3 #8 & 1 #10G, 3/4"C.	4W35	4 #8 & 1 #10G, 3/4"C.	2W35	2 #8 & 1 #10G, 3/4"C.
3W40	3 #8 & 1 #10G, 3/4"C.	4W40	4 #8 & 1 #10G, 3/4"C.	2W40	2 #8 & 1 #10G, 3/4"C.
3W45	3 #6 & 1 #10G, 3/4"C.	4W45	4 #6 & 1 #10G, 1"C.	2W45	2 #6 & 1 #10G, 3/4"C
3W50	3 #6 & 1 #10G, 3/4"C.	4W50	4 #6 & 1 #10G, 1"C.	2W50	2 #6 & 1 #10G, 3/4"C.
3W60	3 #4 & 1 #10G, 1"C.	4W60	4 #4 & 1 #10G, 1-1/4"C.	2W60	2 #4 & 1 #10G, 3/4"C.
3W70	3 #4 & 1 #8G, 1"C.	4W70	4 #4 & 1 #8G, 1-1/4"C.	2W70	2 #4 & 1 #8G, 1"C.
3W80	3 #3 & 1 #8G, 1-1/4"C.	4W80	4 #3 & 1 #8G, 1-1/4"C.	2W80	2 #3 & 1 #8G, 1"C.
3W90	3 #2 & 1 #8G, 1-1/4"C.	4W90	4 #2 & 1 #8G, 1-1/4"C.	2W90	2 #2 & 1 #8G, 1"C.
3W100	3 #2 & 1 #8G, 1-1/4"C	4W100	4 #2 & 1 #8G, 1-1/4"C	2W100	2 #2 & 1 #8G, 1"C.
3W110	3 #1/0 & 1 #6G, 1-1/2"C.	4W110	4 #1/0 & 1 #6G, 2"C.		
3W125	3 #1/0 & 1 #6G, 1-1/2"C.	4W125	4 #1/0 & 1 #6G, 2"C.	5W20	3 #12 & 1 #12G, 1 #8N, 3/4"C.
3W150	3 #1/0 & 1 #6G, 1-1/2"C.	4W150	4 #1/0 & 1 #6G, 2"C.	5W30	3 #10 & 1 #10G, 1 #6N, 3/4"C.
3W175	3 #2/0 & 1 #6G, 1-1/2"C.	4W175	4 #2/0 & 1 #6G, 2"C.	5W35	3 #8 & 1 #10G, 1 #4N, 1"C.
3W200	3 #3/0 & 1 #6G, 2"C.	4W200	4 #3/0 & 1 #6G, 2"C.	5W40	3 #8 & 1 #10G, 1 #4N, 1"C.
3W225	3 #4/0 & 1 #4G, 2"C.	4W225	4 #4/0 & 1 #4G, 2-1/2"C.	5W45	3 #6 & 1 #10G, 1 #3N, 1"C.
3W250	3 #250KCM & 1 #4G, 2"C.	4W250	4 #250KCM & 1 #4G, 2-1/2"C.	5W50	3 #6 & 1 #10G, 1 #3N, 1"C.
3W300	3 #300KCM & 1 #4G, 2 1/2"C.	4W300	4 #300KCM & 1 #4G, 3"C.	5W60	3 #4 & 1 #10G, 1 #3N, 1-1/4"C.
3W350	3 #400KCM & 1 #3G, 2-1/2"C.	4W350	4 #400KCM & 1 #3G, 3"C.	5W70	3 #4 & 1 #8G, 1 #1N, 1-1/4"C.
3W400	3 #500KCM & 1 #3G, 3"C.	4W400	4 #500KCM & 1 #3G, 3-1/2"C.	5W80	3 #3 & 1 #8G, 1 #1/0N, 1-1/4"C.
3W450	(2) 3 #4/0 & 1 #2G, 2"C.	4W450	(2) 4 #4/0 & 1 #2G, 2-1/2"C.	5W90	3 #2 & 1 #8G, 1 #2/0N, 1-1/2"C.
3W500	(2) 3 #250KCM & 1 #2G, 2"C.	4W500	(2) 4 #250KCM & 1 #2G, 2-1/2"C.	5W100	3 #2 & 1 #8G, 1 #2/0N, 1-1/2"C.
3W600	(2) 3 #300KCM & 1 #1G, 2-1/2"C.	4W600	(2) 4 #300KCM & 1 #1G, 3"C.	5W110	5 #1/0 & 1 #6G, 2"C.
3W700	(2) 3 #400KCM & 1 #1/0G, 3"C.	4W700	(2) 4 #400KCM & 1 #1/0G, 3"C.	5W125	5 #1/0 & 1 #6G, 2"C.
3W800	(2) 3 #500KCM & 1 #1/0G, 3"C.	4W800	(2) 4 #500KCM & 1 #1/0G, 3-1/2"C.	5W150	5 #2/0 & 1 #6G, 2"C.
3W900	(3) 3 #350KCM & 1 #2/0G, 2-1/2"C.	4W900	(3) 4 #350KCM & 1 #2/0G, 3"C.	5W175	5 #3/0 & 1 #6G, 2-1/2"C.
3W1000	(3) 3 #400KCM & 1 #2/0G, 3"C.	4W1000	(3) 4 #400KCM & 1 #2/0G, 3"C.	5W200	5 #4/0 & 1 #6G, 2-1/2"C.
3W1200	(4) 3 #350KCM & 1 #3/0G, 2-1/2"C.	4W1200	(4) 4 #350KCM & 1 #3/0G, 3"C.	5W225	5 #250 & 1 #4G, 3"C.
3W1600	(5) 3 #400KCM & 1 #4/0G, 3"C.	4W1600	(5) 4 #400KCM & 1 #4/0G, 3"C.	5W250	5 #300KCM & 1 #4G, 3"C.
3W2000	(6) 3 #400KCM & 1 #250KCM G, 3"C.	4W2000	(6) 4 #400KCM & 1 #250KCM G, 3"C.	5W300	5 #400KCM & 1 #4G, 3-1/2"C.
3W2500	(7) 3 #500KCM & 1 #350KCM G, 3"C.	4W2500	(7) 4 #500KCM & 1 #350KCM G, 3-1/2"C.	5W350	5 #500KCM & 1 #3G, 3-1/2"C.
3W3000	(8) 3 #500KCM & 1 #500KCM G, 3"C.	4W3000	(8) 4 #500KCM & 1 #500KCM G, 3-1/2"C.	5W400	(2) 5 #4/0 & 1 #3G, 2-1/2"C.
3W4000	(11) 3 #500KCM & 1 #500KCM G, 3"C.	4W4000	(11) 4 #500KCM & 1 #500KCM G, 3-1/2"C.	5W450	(2) 5 #250KCM & 1 #2G, 3"C.
				5W500	(2) 5 #300KCM & 1 #2G, 3"C.
				5W600	(2) 5 #400KCM & 1 #1G, 3-1/2"C.
				5W700	(2) 5 #500KCM & 1 #1/0G, 3-1/2"C.
				5W800	(3) 5 #300KCM & 1 #1/0G, 3"C.

MOUNTING HEIGHTS:

UNLESS OTHERWISE INDICATED, OUTLET BOXES IN WALLS SHALL BE LOCATED WITH CENTERLINE AT THE FOLLOWING ELEVATIONS ABOVE THE FINISHED FLOOR LINE. VERIFY ALL HEIGHTS PRIOR TO ACTUAL LAYOUT OF WORK WITH THE GENERAL CONSTRUCTION CONTRACTOR.

1. SWITCH OUTLETS	4 FEET
2. BRACKET OUTLETS (STAIRS)	7 FEET
3. BRACKET OUTLETS (OTHER)	6 FEET-6 INCHES
4. RECEPTACLE OUTLETS (U.O.N.)	1 FOOT-6 INCHES
5. RECEPTACLE OUTLETS, MECHANICAL ROOMS	3 FEET
6. RECEPTACLE OUTLETS MOUNTED, ABOVE CASEWORK/CABINETS	4 INCHES ABOVE BACKSPLASH
7. CLOCK OUTLETS	12 INCHES BELOW CEILING
8. MOTOR STARTERS AND SAFETY SWITCHES	4 FEET-6 INCHES
9. PANELBOARDS (TOP)	6 FEET-6 INCHES
10. TELECOM OUTLETS	1 FOOT-6 INCHES
11. WALL PHONE OUTLETS	4 FEET-0 INCHES

MOUNTING HEIGHT NOTES:

1. THE ABOVE MOUNTING HEIGHTS SHALL BE ADHERED TO UNLESS OTHERWISE NOTED ON PLANS OR SPECIFICATIONS.

LUMINAIRE SCHEDULE

1. ABBREVIATIONS: R=RECESSED; S= SURFACE; W=WALL; AI=AS INDICATED ON PLAN
2. SINGLE NUMERAL PREFIX IN LAMP COLUMN INDICATES NUMBER OF LAMPS IN LUMINAIRE (e.g., (2) F32T8/SPX35/ECO).
3. LAMPS ARE SPECIFIED BY MFG'S LAMP ORDERING CODE, NOT ANSI CODE NUMBER. LAMPS LISTED ARE OSRAM SYLVANIA UNLESS OTHERWISE NOTED.
4. MANUFACTURER AND CATALOG NUMBER LISTED ARE PRIMARY SPECIFICATION AND INDICATE DESIGN INTENT. ALTERNATE MANUFACTURERS ARE GIVEN BY NAME ONLY.
5. " ** " DENOTES MANUFACTURER'S CATALOG NUMBER LISTING FOR CEILING TYPE MOUNTING OPTION. CONTRACTOR SHALL COORDINATE WITH FINAL APPROVED CEILING FINISH PRIOR TO ORDERING.
6. FIRST NAMED MANUFACTURER AND CATALOG NUMBER CONSTITUTE BASIS OF DESIGN. ALTERNATE MANUFACTURERS SUBMITTED MUST MEET CONSTRUCTION, OPERABILITY, PHOTOMETRIC AND AESTHETIC CRITERIA SET FORTH BY BASIS OF DESIGN PUBLISHED INFORMATION.

TYPE	MANUFACTURER/#	ALTERNATE MFG'R	DESCRIPTION	MTG.	LAMPING	VOLTS	WATTS
A1	**FOCAL POINT** FSM4BS-FLFL-875DN-375UP-30K-1C-UNV-LD1-C24-WH-4'	FINELITE, PRUDENTIAL	4' LINEAR LED SUSPENDED, DIRECT/INDIRECT 70/30 DISTRIBUTION, 4" EXTRUDED ALUMINUM HOUSING, MATTE WHITE POLYESTER POWDER COAT FINISH, CONTINUOUS FROSTED ACRYLIC LENS, 3000K, 0-10V DIMMING, 24" CABLE SUSPENSION. MOUNT AT 10'-0" AFF TO BOTTOM OF FIXTURE UNLESS NOTED OTHERWISE.	S	LED	120	56
A1E	**FOCAL POINT** FSM4BS-FLFL-875DN-375UP-30K-1C-120-LD1-C24-EM-WH-4'	FINELITE, PRUDENTIAL	4' LINEAR LED SUSPENDED, DIRECT/INDIRECT 70/30 DISTRIBUTION, 4" EXTRUDED ALUMINUM HOUSING, MATTE WHITE POLYESTER POWDER COAT FINISH, CONTINUOUS FROSTED ACRYLIC LENS, 3000K, 0-10V DIMMING, 24" CABLE SUSPENSION, EMERGENCY BATTERY PACK. MOUNT AT 10'-0" AFF TO BOTTOM OF FIXTURE UNLESS NOTED OTHERWISE.	S	LED	120	56
A2	**FOCAL POINT** FSM4L-FL-875LF-30K-1C-UNV-LD1-XF2-WH-4'	FINELITE, PRUDENTIAL	4' LINEAR LED RECESSED SLOT, EXTRUDED ALUMINUM 4" APERTURE, MATTE WHITE POLYESTER POWDER COAT FINISH, CONTINUOUS FROSTED ACRYLIC LENS, 3000K, 0-10V DIMMING.	R	LED	120	43
B1	**LITHONIA** 2BLT2 33L ADPT EZ1 LP830	COLUMBIA, FOCAL POINT	2X2 LED RECESSED, LAY-IN GRID, DIE-FORMED ENLOSURE COMPONENTS, EXTRUDED ACRYLIC DIFFUSER, POLYESTER POWDER-PAINT FINISH, 3000K, 0-10V DIMMING.	R	LED	120	30
B1E	**LITHONIA** 2BLT2 33L ADPT EZ1 LP830 EL14L	COLUMBIA, FOCAL POINT	2X2 LED RECESSED, LAY-IN GRID, DIE-FORMED ENLOSURE COMPONENTS, EXTRUDED ACRYLIC DIFFUSER, POLYESTER POWDER-PAINT FINISH, 3000K, 0-10V DIMMING, 1400 LUMEN BATTERY PACK.	R	LED	120	30
B2	**LITHONIA** 2BLT2 33L ADPT EZ1 LP830 N100	COLUMBIA, FOCAL POINT	2X2 LED RECESSED, LAY-IN GRID, DIE-FORMED ENLOSURE COMPONENTS, EXTRUDED ACRYLIC DIFFUSER, POLYESTER POWDER-PAINT FINISH, 3000K, 0-10V DIMMING, nLIGHT EMBEDDED CONTROLS.	R	LED	120	30
B2E	**LITHONIA** 2BLT2 33L ADPT EZ1 LP830 N100 EL14L	COLUMBIA, FOCAL POINT	2X2 LED RECESSED, LAY-IN GRID, DIE-FORMED ENLOSURE COMPONENTS, EXTRUDED ACRYLIC DIFFUSER, POLYESTER POWDER-PAINT FINISH, 3000K, 0-10V DIMMING, nLIGHT EMBEDDED CONTROLS, 1400 LUMEN BATTERY PACK.	R	LED	120	30
B2S	**LITHONIA** 2BLT2 33L ADPT EZ1 LP830 N100 NESPDT7	COLUMBIA, FOCAL POINT	2X2 LED RECESSED, LAY-IN GRID, DIE-FORMED ENLOSURE COMPONENTS, EXTRUDED ACRYLIC DIFFUSER, POLYESTER POWDER-PAINT FINISH, 3000K, 0-10V DIMMING, nLIGHT EMBEDDED CONTROLS, DUAL TECHNOLOGY INTEGRAL OCCUPANCY CONTROL.	R	LED	120	30
C1	**LITHONIA** LDN6 30/10 LO6AR 120	INTENSE, PRESCOLITE	6" LED RECESSED OPEN DOWNLIGHT, GALVANIZED STEEL CONSTRUCTION, SEMI-SPECULAR FINISHING CLEAR TRIM, 1000 LUMENS, 3000K, 0-10V DIMMING.	R	LED	120	18
C1E	**LITHONIA** LDN6 30/10 LO6AR 120 EL	INTENSE, PRESCOLITE	6" LED RECESSED OPEN DOWNLIGHT, GALVANIZED STEEL CONSTRUCTION, SEMI-SPECULAR FINISHING CLEAR TRIM, 1000 LUMENS, 3000K, 0-10V DIMMING, EMERGENCY BATTERY PACK.	R	LED	120	18
C2	**GOTHAM** LDN6 30/20 LO6AR 120	INTENSE, PRESCOLITE	6" LED RECESSED OPEN DOWNLIGHT, GALVANIZED STEEL CONSTRUCTION, SEMI-SPECULAR FINISHING CLEAR TRIM, 2000 LUMENS, 3000K, 0-10V DIMMING.	R	LED	120	35
C2E	**GOTHAM** LDN6 30/20 LO6AR 120 EL	INTENSE, PRESCOLITE	6" LED RECESSED OPEN DOWNLIGHT, GALVANIZED STEEL CONSTRUCTION, SEMI-SPECULAR FINISHING CLEAR TRIM, 2000 LUMENS, 3000K, 0-10V DIMMING, EMERGENCY BATTERY PACK.	R	LED	120	35
D1/D1E	**GOTHAM** EVO CYL 30/30 6AR MWD LD MVOLT EXA1 FCM DNA	INTENSE	8" LED CYLINDRICAL DOWNLIGHT, SURFACE MOUNTED, ALUMINUM HOUSING, SELF-FLANGED MATTE-DIFFUSE FINISHING TRIM, NATURAL ALUMINUM POLYESTER POWDER PAINT FINISH, MEDIUM WIDE DISTRIBUTION, 3000 LUMENS, 3000K, 0-10V DIMMING, WIRELESS CONTROL.	S	LED	120	36.6
D2/D2E	**GOTHAM** EVO CYL 30/30 6AR MWD LD MVOLT EXA1 PM DNA	INTENSE	8" LED CYLINDRICAL DOWNLIGHT, STEM MOUNTED, ALUMINUM HOUSING, SELF-FLANGED MATTE-DIFFUSE FINISHING TRIM, NATURAL ALUMINUM POLYESTER POWDER PAINT FINISH, MEDIUM WIDE DISTRIBUTION, 3000 LUMENS, 3000K, 0-10V DIMMING, WIRELESS CONTROL. PROVIDE MOUNTING STEM AND CANOPY. MOUNT AT 17'-6" AFF TO BOTTOM OF FIXTURE U.N.O.	S	LED	120	36.6
D3/D3E	**GOTHAM** EVO CYL 30/25 6AR MWD LD MVOLT EZ1 FCM DNA	INTENSE	8" LED CYLINDRICAL DOWNLIGHT, SURFACE MOUNTED, ALUMINUM HOUSING, SELF-FLANGED MATTE-DIFFUSE FINISHING TRIM, NATURAL ALUMINUM POLYESTER POWDER PAINT FINISH, MEDIUM WIDE DISTRIBUTION, 2500 LUMENS, 3000K, 0-10V DIMMING.	S	LED	120	29.5
D4/D4E	**GOTHAM** EVO CYL 30/20 6AR MWD LD MVOLT EZ1 PM DNA	INTENSE	8" LED CYLINDRICAL DOWNLIGHT, STEM MOUNTED, ALUMINUM HOUSING, SELF-FLANGED MATTE-DIFFUSE FINISHING TRIM, NATURAL ALUMINUM POLYESTER POWDER PAINT FINISH, MEDIUM WIDE DISTRIBUTION, 2000 LUMENS, 3000K, 0-10V DIMMING. PROVIDE MOUNTING STEM AND CANOPY. MOUNT AT 17'-6" AFF TO BOTTOM OF FIXTURE U.N.O.	S	LED	120	23.2
E1	**FOCAL POINT** FSM4LW-FL-375LF-30K-1C-UNV-LD1-WM-WH-4'	PRUDENTIAL, FINELITE	4' LINEAR LED WALL MOUNT, 4" EXTRUDED ALUMINUM HOUSING, MATTE WHITE POLYESTER POWDER COAT FINISH, CONTINUOUS FROSTED ACRYLIC LENS, 3000K, 0-10V DIMMING. WALL MOUNT ABOVE RESTROOM VANITY, REFER TO ARCHITECTURAL DETAILS/ELEVATIONS.	W	LED	120	17
E2	**FOCAL POINT** FSM4LW-FL-375LF-30K-1C-UNV-LD1-WM-WH-5'	PRUDENTIAL, FINELITE	5' LINEAR LED WALL MOUNT, 4" EXTRUDED ALUMINUM HOUSING, MATTE WHITE POLYESTER POWDER COAT FINISH, CONTINUOUS FROSTED ACRYLIC LENS, 3000K, 0-10V DIMMING. WALL MOUNT ABOVE RESTROOM VANITY, REFER TO ARCHITECTURAL DETAILS/ELEVATIONS.	W	LED	120	22
F1	**LITHONIA** ZL1D L48 3000LM FST MVOLT 30K 80CRI WH	COLUMBIA	4' LED STRIPLIGHT, DROP LENS AND UPLIGHT, COLD-ROLLED STEEL HOUSING, HIGH-GLOSS BAKED WHITE ENAMEL FINISH, 3000K. PROVIDE WIREGUARD AND HANGER CHAIN. MOUNT AT 9'-6" AFF TO BOTTOM OF FIXTURE UNLESS NOTED OTHERWISE.	S	LED	120	30
F1E	**LITHONIA** ZL1D L48 3000LM FST 120 30K 80CRI E7W WH	COLUMBIA	4' LED STRIPLIGHT, DROP LENS AND UPLIGHT, COLD-ROLLED STEEL HOUSING, HIGH-GLOSS BAKED WHITE ENAMEL FINISH, 3000K, EMERGENCY BATTERY PACK. PROVIDE WIREGUARD AND HANGER CHAIN. MOUNT AT 9'-6" AFF TO BOTTOM OF FIXTURE UNLESS NOTED OTHERWISE.	S	LED	120	30
F2	**LITHONIA** DMW2 L24 3000LM AFL MD MVOLT GZ1 40K 80CRI	COLUMBIA, WILLIAMS	2' LED ENCLOSED AND GASKETED INDUSTRIAL STRIP, FIBERGLASS HOUSING, NEMA 4X GASKET, POLYMERIC LATCHES, STAINLESS STEEL SURFACE SPRING MOUNTING BRACKETS, FROSTED ACRYLIC LENS, 3000 LUMENS, 4000K, WET LOCATION. WALL MOUNTED IN ELEVATOR PIT, FIELD COORDINATE MOUNTING HEIGHT.	W	LED	120	27
G	**LITHONIA** DSXW1 LED 20C 350 30K T2M MVOLT ELCW DBLXD	HUBBELL, SPAULDING	LED ARCHITECTURAL WALL SCONCE, ONE-PIECE DIE-CAST ALUMINUM HOUSING, BLACK FINISH, ACRYLIC LENSES, TYPE II MEDIUM DISTRIBUTION, 3000K, UNIVERSAL MOUNTING PLATE, EMERGENCY BATTERY BACKUP, WET LOCATION. MOUNT AT 8'-0" AFG TO BOTTOM OF FIXTURE UNLESS NOTED OTHERWISE.	W	LED	120	25
H	**LUMENPULSE** LOG HO 120 48 30K 60x60 WAM2 SI NO		4' LINEAR LED SURFACE MOUNTED DOWNLIGHT, EXTRUDED ALUMINUM HOUSING, SILVER SANDTEXT POLYESTER POWDER COAT FINISH, MACHINED ALUMINUM END CAPS, SILICONE GASKETS, CLEAR TEMPERED GLASS, ADJUSTABLE WALL MOUNT, 60 DEGREE DISTRIBUTION, 3000K, WET LOCATION, IP66.	AI	LED	120	61
JE	**PRUDENTIAL** P46-LED3-SO-LO-4'-TMW-AWL-D1R-ASY-R-DC-UNV-WM-ND-EMH		4' LINEAR LED WALL MOUNT, DIRECT/INDIRECT, EXTRUDED ALUMINUM HOUSING, TEXTURED MATTE WHITE TRIM, ACRYLIC WALL WASH LENS, PERIMETER FILL DOWN LIGHT, ASYMMETRIC GLOW UP LIGHT, 3000K, DUAL CIRCUIT, EMERGENCY BATTERY. MOUNT AT 9'-0" AFF TO BOTTOM OF FIXTURE UNLESS NOTED OTHERWISE.	W	LED	120	58
S1	**LITHONIA** DSX1 LED 60C 700 30K T2M MVOLT SPA	BEACON, SPAULDING	LED ROADWAY LUMINAIRE, TYPE II MEDIUM DISTRIBUTION, 3000K, SQUARE POLE MOUNTING. MOUNT AT 30'-0" AFG UNLESS NOTED OTHERWISE.	AI	LED	120	131
S2A	**LITHONIA** MRP LED 42C 1000 30K SR2 MVOLT	ARCHITECTURAL AREA, VISIONAIRE ARIA	LED AREA LUMINAIRE, TYPE II DISTRIBUTION, 3000K, FITS 4" OD ROUND POLE, MOUNT AT 20'-0" AFG UNLESS NOTED OTHERWISE.	AI	LED	120	151
S2B	**LITHONIA** MRP LED 42C 1000 30K SR5 MVOLT	ARCHITECTURAL AREA, VISIONAIRE ARIA	LED AREA LUMINAIRE, TYPE V DISTRIBUTION, 3000K, FITS 4" OD ROUND POLE, MOUNT AT 20'-0" AFG UNLESS NOTED OTHERWISE.	AI	LED	120	151
S3	**LITHONIA** DSXF1 LED 1 A530/30K HMF MVOLT THK DDBXD		LED FLOOD LUMINAIRE,	G	LED	120	19
X1	**LITHONIA** LRP 1 RC 120/277 EL N	DUAL LITE, EMERGI-LITE, EXITRONIX	EDGE-LIT LED EXIT SIGN, SINGLE FACE, RED LETTERS, DIRECTIONAL INDICATORS AS SHOWN ON PLANS, NICKEL CADNIUM BATTERY.	S	LED	120	1
X2	**LITHONIA** LRP 2 RMR 120/277 EL NH	DUAL LITE, EMERGI-LITE, EXITRONIX	EDGE-LIT LED EXIT SIGN, DOUBLE FACE, RED LETTERS, DIRECTIONAL INDICATORS AS SHOWN ON PLANS, NICKEL CADNIUM BATTERY.	S	LED	120	1

Greenville
NORTH CAROLINA

JACOBS

333 Fayetteville Street, Suite 1100
Raleigh, NC 27601
PH: 919-334-3100 FX: 919-334-3122 www.jacobs.com
North Carolina Engineering Firm License No. F-287
North Carolina Architectural Firm Reg. No. 50757

AYERS SAINT GROSS

Consultants:

ARK Consulting Group, PLLC

Coaly Design
Landscape Architecture + Land Planning

Seals:

NORTH CAROLINA PROFESSIONAL SEAL 025653 ENGINEER MARK WILLIS 5-9-16

General Notes:

Project Client:
Owner

GREENVILLE TRANSPORTATION ACTIVITY CENTER
600 S. Pitt Street, Greenville, NC

Number	Description	Date
O	IFC	05.10.2016

Key Plan: Project North

CAD File:
Project No.: L3005900
Copyright: 2015 Jacobs Engineering Group

Drawing Sheet Title:
ELECTRICAL ABBREVIATIONS & SCHEDULES

Drawing Sheet Number:
E-002

Owner's Drawing Sheet No.:

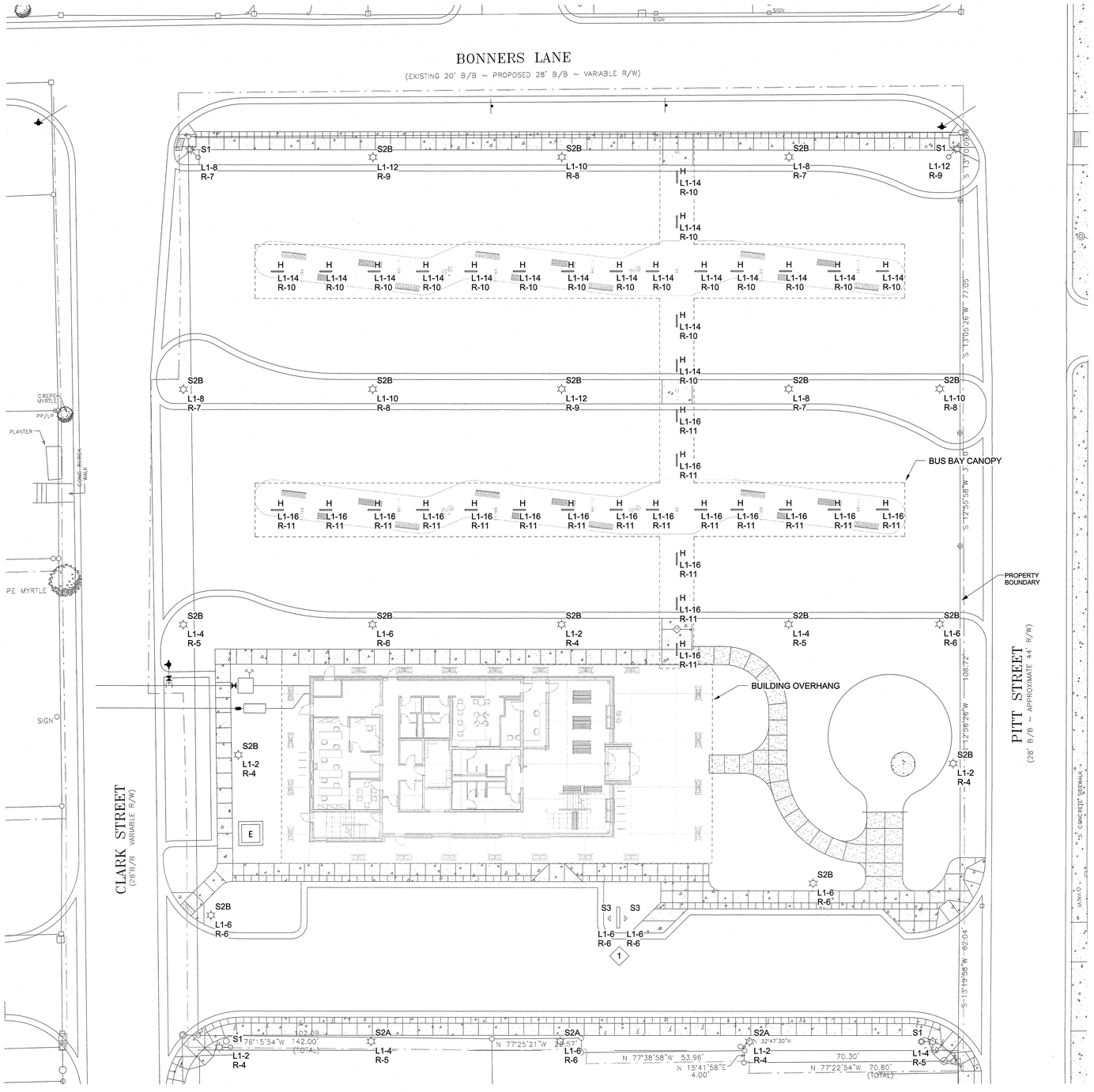

1 ELECTRICAL SITE LIGHTING PLAN
1/16" = 1'-0"

SITE LIGHTING PLAN KEYNOTES:

1 MOUNT SIGN LIGHTING 2'-2" AWAY FROM CENTER OF ENTRANCE SIGN

Greenville
NORTH CAROLINA

JACOBS
333 Fayetteville Street, Suite 1100
Raleigh, NC 27601
PH: 919-334-3100 FX: 919-334-3122 www.jacobs.com
North Carolina Engineering Firm License No. F-287
North Carolina Architectural Firm Reg. No. 50757

AYERS SAINT GROSS

Consultants:
ARK Consulting Group, PLLC

Coaly Design
Landscape Architecture + Land Planning

Seals:

NORTH CAROLINA PROFESSIONAL ENGINEER SEAL 025653 5-9-16 MARK WILLIS

General Notes:

Project Client:
Owner

GREENVILLE
TRANSPORTATION
ACTIVITY CENTER
600 S. Pitt Street, Greenville, NC

Number	Description	Date
0	IFC	05.10.2016

Key Plan:

Project North

CAD File:

Project No.: L3005900

Copyright: 2015 Jacobs Engineering Group

Drawing Sheet Title:

ELECTRICAL SITE
LIGHTING PLAN

Drawing Sheet Number:

E-100

Owner's Drawing Sheet No.:

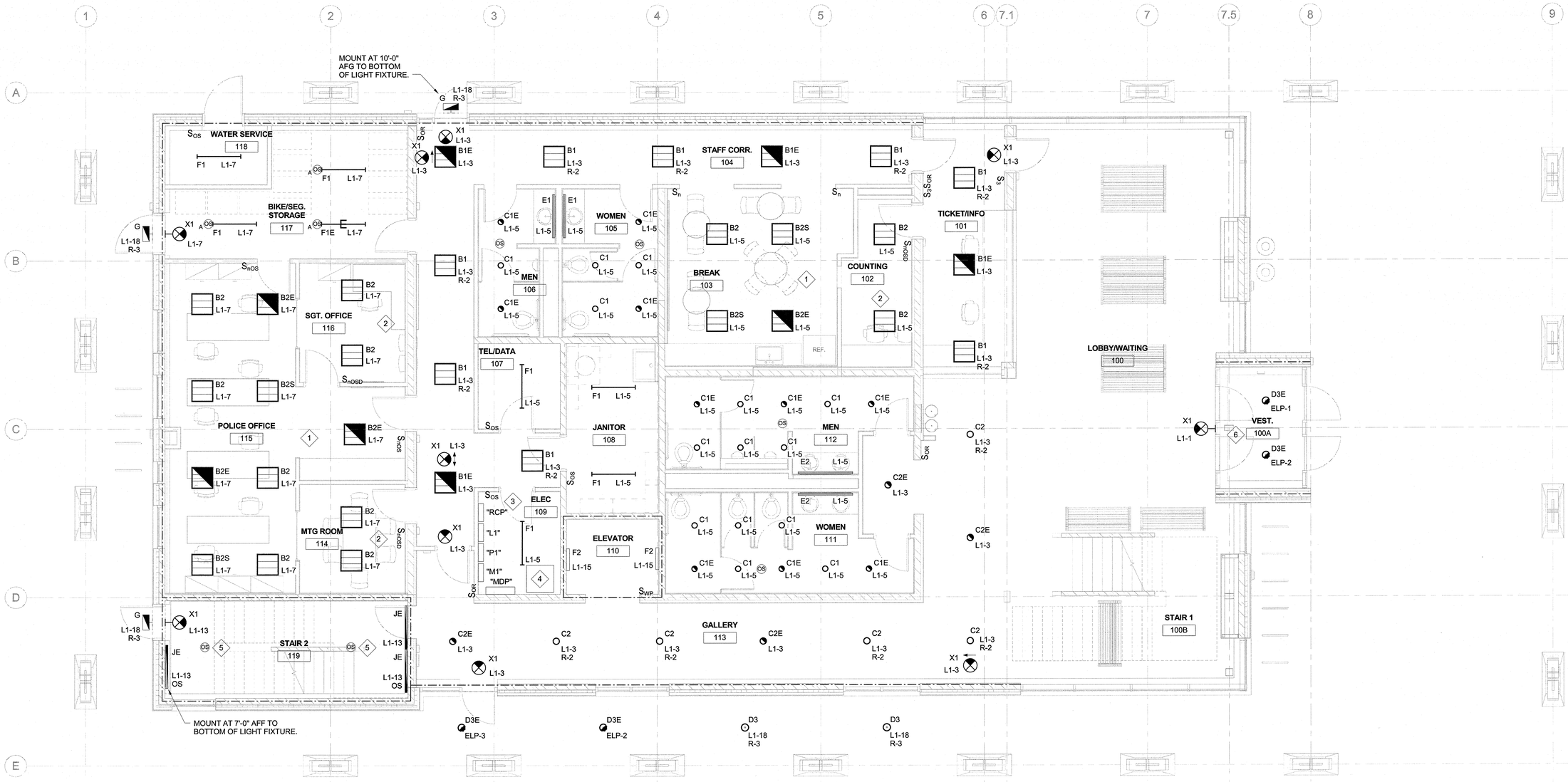

1 ELECTRICAL LIGHTING PLAN LEVEL 1
1/4" = 1'-0"

LIGHTING PLAN KEY NOTES:

1. PROVIDE nLIGHT SYSTEM (OR APPROVED EQUAL) TO CONTROL LARGER OFFICE AREAS AND BREAK ROOM. IN EACH ROOM PROVIDE INTEGRAL DUAL TECHNOLOGY OCCUPANCY SENSORS IN FIXTURES, nLIGHT WALL PODS (QUANTITIES AS SHOWN), CAT 5e PLENUM RATED CABLING, AND ANY ADDITIONAL COMPONENT NECESSARY FOR A COMPLETE AND FUNCTIONAL SYSTEM. INSTALLATION SHALL INCLUDE FACTORY START-UP AND COMMISSIONING TO PROGRAM SYSTEM.
2. PROVIDE nLIGHT SYSTEM (OR APPROVED EQUAL) TO CONTROL SMALLER OFFICE AREAS. IN EACH ROOM PROVIDE ONE (1) DUAL TECHNOLOGY WALL SWITCH SENSOR nWSX PDT LV DX, CAT 5e PLENUM RATED CABLING, AND ANY ADDITIONAL COMPONENT NECESSARY FOR A COMPLETE AND FUNCTIONAL SYSTEM. INSTALLATION SHALL INCLUDE FACTORY START-UP AND COMMISSIONING TO PROGRAM SYSTEM.
3. PROVIDE RELAY CONTROL PANEL IN ELECTRICAL ROOM 109 TO DELIVER VIA RELAY TIME CLOCK CONTROL FOR DESIGNATED INTERIOR LIGHTING AND POWER CIRCUITS AND PHOTOCELL CONTROL FOR DESIGNATED EXTERIOR LIGHTING CIRCUITS. REFER TO SHEET E-901 FOR CONTROL PANEL RELAY SCHEDULE.
4. PROVIDE 2.8KW EMERGENCY LIGHTING INVERTER IN ELECTRICAL ROOM 109 TO OPERATE INTERIOR AND EXTERIOR EMERGENCY LIGHT FIXTURES SPECIFIED WITHOUT INTEGRAL BATTERY PACKS (FIXTURE TYPES D1E, D2E, D3E, AND D4E).
5. PROVIDE CEILING MOUNTED DUAL TECHNOLOGY OCCUPANCY SENSOR IN STAIRWELL TO CONTROL 50% OF STAIRWELL LIGHTING. OCCUPANCY SENSORS SHALL PROVIDE AUTOMATIC ON/OFF SWITCHING TO ALL FIXTURES DESIGNATED "OS". SEE LEVEL 2 LIGHTING PLAN FOR CONTINUATION OF STAIRWELL LIGHTING.
6. FEED TO LIGHT FIXTURES SHALL BE RUN UNDERSLAB.

GENERAL NOTES:

1. ALL PENETRATIONS OF CROSS LAMINATED TIMBER CONSTRUCTION (CLT) SHALL BE CAREFULLY PRE-COORDINATED WITH CLT SUPPLIER. ELECTRICAL CONTRACTOR WILL BE RESPONSIBLE FOR IDENTIFYING, CONFIRMING, AND COORDINATION OF ANY AND ALL CONDUITS AND ASSOCIATED APPURTENANCES WELL IN ADVANCE OF ANY CONSTRUCTION.
2. ANY AND ALL ELEMENTS REQUIRED FOR A COMPLETE AND WORKING SYSTEM NECESSARY FOR ELECTRICAL OPERATION THAT WILL BE WALL-MOUNTED ON THE CLT WILL NEED TO BE COORDINATED IN AREAS WITH A CHASE BEHIND FOR POKE THROUGH PENETRATION OF CLT WALL.

FIRE RATING LEGEND

1-HR FIRE RATED WALL LINE
2-HR FIRE RATED WALL LINE
CROSS LAMINATED TIMBER

Greenville
NORTH CAROLINA

JACOBS
333 Fayetteville Street, Suite 1100
Raleigh, NC 27601
PH: 919-334-3100 FX: 919-334-3122 www.jacobs.com
North Carolina Engineering Firm License No. F-287
North Carolina Architectural Firm Reg. No. 50757

AYERS SAINT GROSS

Consultants:
ARK Consulting Group, PLLC
Coaly Design
Landscape Architecture + Land Planning

Seals:

General Notes:

Project Client:
Owner

GREENVILLE TRANSPORTATION ACTIVITY CENTER
600 S. Pitt Street, Greenville, NC

Number	Description	Date
0	IFC	05.10.2016

Key Plan:

Project North

CAD File:
Project No.: L3005900
Copyright: 2015 Jacobs Engineering Group

Drawing Sheet Title:
ELECTRICAL LIGHTING PLAN LEVEL 1

Drawing Sheet Number:
E-101

Owner's Drawing Sheet No.:

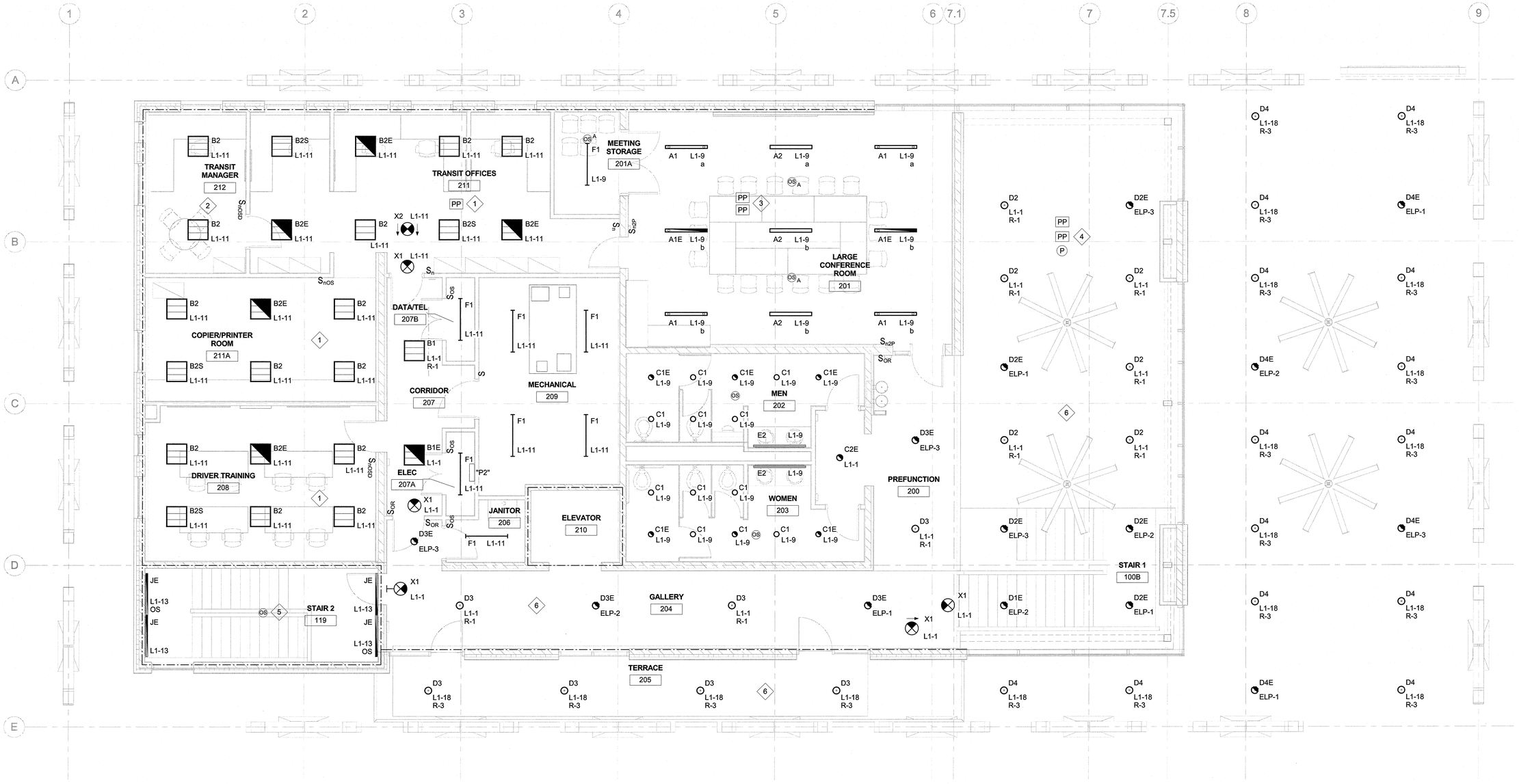

1 ELECTRICAL LIGHTING PLAN LEVEL 2
1/4" = 1'-0"

LIGHTING PLAN KEY NOTES:

1. PROVIDE nLIGHT SYSTEM (OR APPROVED EQUAL) TO CONTROL LARGER OFFICE AREAS AND TRAINING ROOM. IN EACH ROOM PROVIDE INTEGRAL DUAL TECHNOLOGY OCCUPANCY SENSORS IN FIXTURES, nLIGHT WALL PODS, CAT 5e PLENUM RATED CABLING, AND ANY ADDITIONAL COMPONENT NECESSARY FOR A COMPLETE AND FUNCTIONAL SYSTEM. INSTALLATION SHALL INCLUDE FACTORY START-UP AND COMMISSIONING TO PROGRAM SYSTEM.
2. PROVIDE nLIGHT SYSTEM (OR APPROVED EQUAL) TO CONTROL SMALLER OFFICE AREAS. IN EACH ROOM PROVIDE ONE (1) DUAL TECHNOLOGY WALL SWITCH SENSOR nWSX PDT LV DX, CAT 5e PLENUM RATED CABLING, AND ANY ADDITIONAL COMPONENT NECESSARY FOR A COMPLETE AND FUNCTIONAL SYSTEM. INSTALLATION SHALL INCLUDE FACTORY START-UP AND COMMISSIONING TO PROGRAM SYSTEM.
3. PROVIDE nLIGHT SYSTEM (OR APPROVED EQUAL) WITH TWO ZONES IN LARGE CONFERENCE ROOM. PROVIDE TWO (2) nPP16 POWER PACKS, DUAL TECHNOLOGY OCCUPANCY SENSORS (QUANTITIES AS SHOWN) nCM PDT 9 RJB, WALL PODS (QUANTITIES AS SHOWN) nPODM 2P DX, CONDUIT WITH CAT 5e CABLING, AND ANY ADDITIONAL COMPONENT NECESSARY FOR A COMPLETE AND FUNCTIONAL SYSTEM. INSTALLATION SHALL INCLUDE FACTORY START-UP AND COMMISSIONING TO PROGRAM SYSTEM.
4. PROVIDE nLIGHT SYSTEM (OR APPROVED EQUAL) TO CONTROL LOBBY. PROVIDE ONE (1) nPS 80 EZ POWER PACK FOR NORMAL LIGHTING, ONE (1) nPS 80 EZ ER POWER PACK FOR EMERGENCY LIGHTING, ONE (1) DAYLIGHT HARVESTING PHOTOCELL nCM ADCX RJB, CONDUIT WITH CAT 5e CABLING, AND ANY ADDITIONAL COMPONENT NECESSARY FOR A COMPLETE AND FUNCTIONAL SYSTEM. INSTALLATION SHALL INCLUDE FACTORY START-UP AND COMMISSIONING TO PROGRAM SYSTEM.
5. PROVIDE CEILING MOUNTED DUAL TECHNOLOGY OCCUPANCY SENSOR IN STAIRWELL TO CONTROL 50% OF STAIRWELL LIGHTING. OCCUPANCY SENSORS SHALL PROVIDE AUTOMATIC ON/OFF SWITCHING TO ALL FIXTURES DESIGNATED "OS". SEE LEVEL 1 LIGHTING PLAN FOR CONTINUATION OF STAIRWELL LIGHTING.
6. SEE ARCHITECTURAL REFLECTED CEILING PLAN A-302 FOR SUGGESTED CONDUIT ROUTING IN EXPOSED CLT CEILING AREAS

GENERAL NOTES:

1. ALL PENETRATIONS OF CROSS LAMINATED TIMBER CONSTRUCTION (CLT) SHALL BE CAREFULLY PRE-COORDINATED WITH CLT SUPPLIER. ELECTRICAL CONTRACTOR WILL BE RESPONSIBLE FOR IDENTIFYING, CONFIRMING, AND COORDINATION OF ANY AND ALL CONDUITS AND ASSOCIATED APPURTENANCES WELL IN ADVANCE OF ANY CONSTRUCTION.
2. ANY AND ALL ELEMENTS REQUIRED FOR A COMPLETE AND WORKING SYSTEM NECESSARY FOR ELECTRICAL OPERATION THAT WILL BE WALL-MOUNTED ON THE CLT WILL NEED TO BE COORDINATED IN AREAS WITH A CHASE BEHIND FOR POKE THROUGH PENETRATION OF CLT WALL.

FIRE RATING LEGEND

1-HR FIRE RATED WALL LINE
2-HR FIRE RATED WALL LINE
CROSS LAMINATED TIMBER

Greenville
NORTH CAROLINA

JACOBS
333 Fayetteville Street, Suite 1100
Raleigh, NC 27601
PH: 919-334-3100 FX: 919-334-3122 www.jacobs.com
North Carolina Engineering Firm License No. F-287
North Carolina Architectural Firm Reg. No. 50757

AYERS SAINT GROSS

Consultants:
ARK Consulting Group, PLLC
Coaly Design
Landscape Architecture + Land Planning

Seals:

NORTH CAROLINA PROFESSIONAL ENGINEER SEAL 025953 MARK WILLIS 9-9-16

General Notes:

Project Client:
Owner

GREENVILLE TRANSPORTATION ACTIVITY CENTER

600 S. Pitt Street, Greenville, NC

Number	Description	Date
0	IFC	05.10.2016

Key Plan:

Project North

CAD File:
Project No.: L3005900
Copyright: 2015 Jacobs Engineering Group

Drawing Sheet Title:
ELECTRICAL LIGHTING PLAN LEVEL 2

Drawing Sheet Number:
E-102

Owner's Drawing Sheet No.:

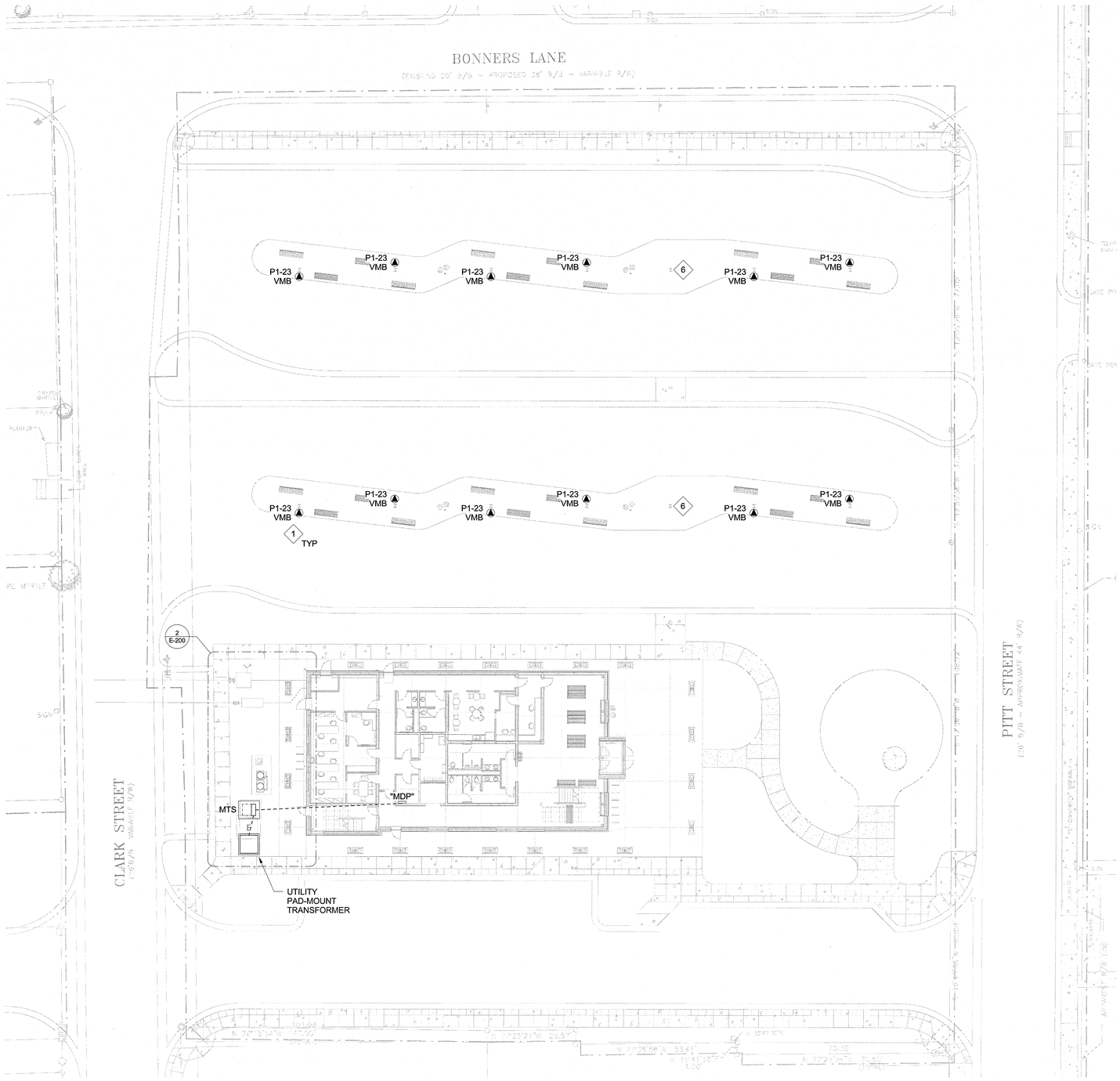

1 ELECTRICAL SITE POWER PLAN
1/16" = 1'-0"

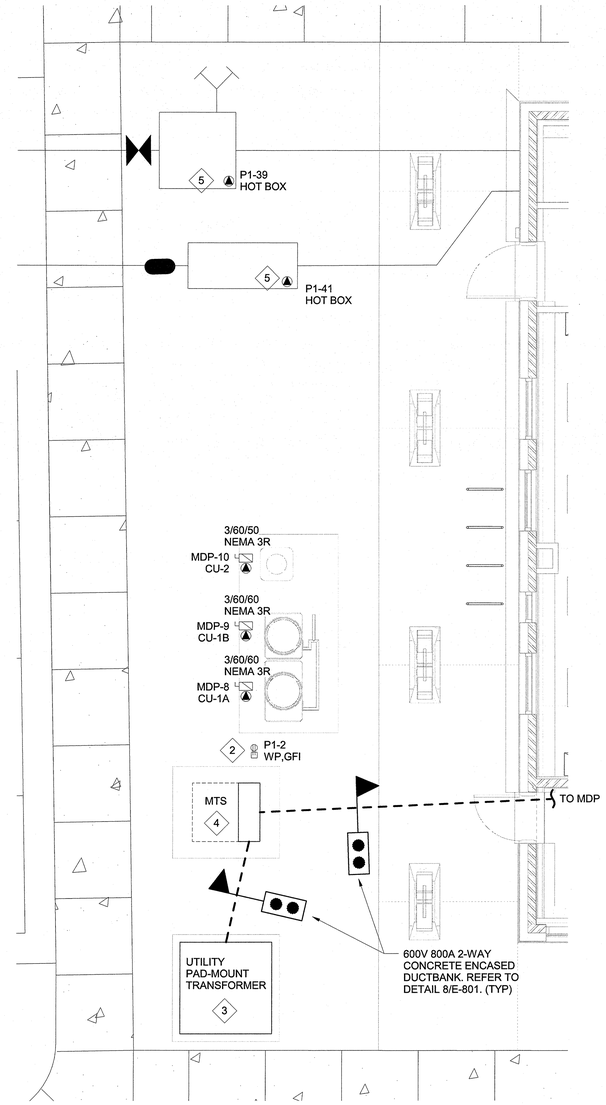

2 ELECTRICAL ENLARGED SITE POWER PLAN
1/4" = 1'-0"

SITE POWER PLAN KEY NOTES:

1. PROVIDE 120V CIRCUIT BELOW CANOPY FOR VISUAL MESSAGE BOARD. COORDINATE LOCATION AND REQUIREMENTS.
2. PROVIDE WP/GFI RECEPTACLE WITHIN 25'-0" OF OUTDOOR EQUIPMENT.
3. NEW UTILITY TRANSFORMER. PROVIDE CONCRETE PAD WITH GROUNDING LOOP AS REQUIRED BY LOCAL UTILITY. REFER TO DETAIL 7/E-801 FOR ADDITIONAL INFORMATION. COORDINATE LOCATION AND REQUIREMENTS.
4. MANUAL TRANSFER SWITCH AND QUICK CONNECT SOLUTION FOR BACKUP PORTABLE GENERATOR. ESL POWER SYSTEMS STORMSWITCH MANUAL TRANSFER SWITCH (OR APPROVED EQUAL) MODEL# SSD8-800C-800C-208-311-S-C-xxx, 800A, 208Y/120VAC 65kAIC, 3PH, 4W, SAFETY INTERLOCKED MANUAL TRANSFER SWITCH, PEDESTAL MOUNT (WITH LEG KIT ASSEMBLY 4052-06), NEMA 3R, 12-GUAGE GALVANIZED STEEL, VENTED, POWDER COATED GRAY (RAL 7038). UNIT SHALL BE FACTORY WIRED COMPLETE WITH 800A CIRCUIT BREAKER FOR UTILITY SIDE (SQUARE D TYPE MGL WITH ELECTRONIC TRIP), 800A CIRCUIT BREAKER FOR GENERATOR SIDE (SQUARE D TYPE MGL WITH ELECTRONIC TRIP), MALE CAM-STYLE RECEPTACLES: (2) A-PHASE-BLACK, (2) B-PHASE-RED, (2) C-PHASE-BLUE, (2) NEUTRAL-WHITE, (1) GROUND-GREEN (PROVIDE WITH COMPLETE SET OF MATING PLUGS), DEAD FRONT CONSTRUCTION, PAD LOCKABLE DOOR WITH STOP, HANDLE COVER, CIRCULATING FANS WIRED TO INPUT CAMS, SUITABLE FOR USE AS SERVICE EQUIPMENT, UL 1008 LISTED, "UTILITY ON" LIGHT, AND 20A AND 30A TWIST-LOCK RECEPTACLES FOR GENERATOR BATTERY CHARGERS AND HEATERS. PROVIDE CONCRETE PAD WITH GROUNDING LOOP. REFER TO DETAIL 7/E-801 FOR ADDITIONAL INFORMATION
5. PROVIDE 120V CIRCUIT TO HOTBOX HEATER FOR BOTH FIRE AND DOMESTIC WATER MAINS. REFER TO CIVIL SITE PLAN. COORDINATE LOCATION AND REQUIREMENTS.
6. ALL CONDUIT SERVING BUS BAYS SHALL BE ROUTED UNDERGROUND AND UP COLUMNS INDICATED TO UNDERSIDE OF CANOPY. FROM COLUMNS INDICATED RUN CONDUIT TIGHT TO STRUCTURE WITHIN CAVITY ALONG CENTER OF CANOPY CONSTRUCTION. REFER TO ARCHITECTURAL BUS BAY SECTION DETAILS FOR MORE INFORMATION.

Greenville
NORTH CAROLINA

JACOBS
333 Fayetteville Street, Suite 1100
Raleigh, NC 27601
PH: 919-334-3100 FX: 919-334-3122 www.jacobs.com
North Carolina Engineering Firm License No. F-287
North Carolina Architectural Firm Reg. No. 50757

AYERS SAINT GROSS

Consultants:
ARK Consulting Group, PLLC

Coaly Design
Landscape Architecture + Land Planning

Seals:

NORTH CAROLINA PROFESSIONAL ENGINEER SEAL 025553 6-1-16 MARK WILLIS

General Notes:

Project Client:
Owner

GREENVILLE TRANSPORTATION ACTIVITY CENTER
600 S. Pitt Street, Greenville, NC

Number	Description	Date
0	IFC	05.10.2016

Key Plan:

Project North

CAD File:
Project No.: L3005900
Copyright: 2015 Jacobs Engineering Group

Drawing Sheet Title:
ELECTRICAL SITE POWER PLAN

Drawing Sheet Number:
E-200

Owner's Drawing Sheet No.:

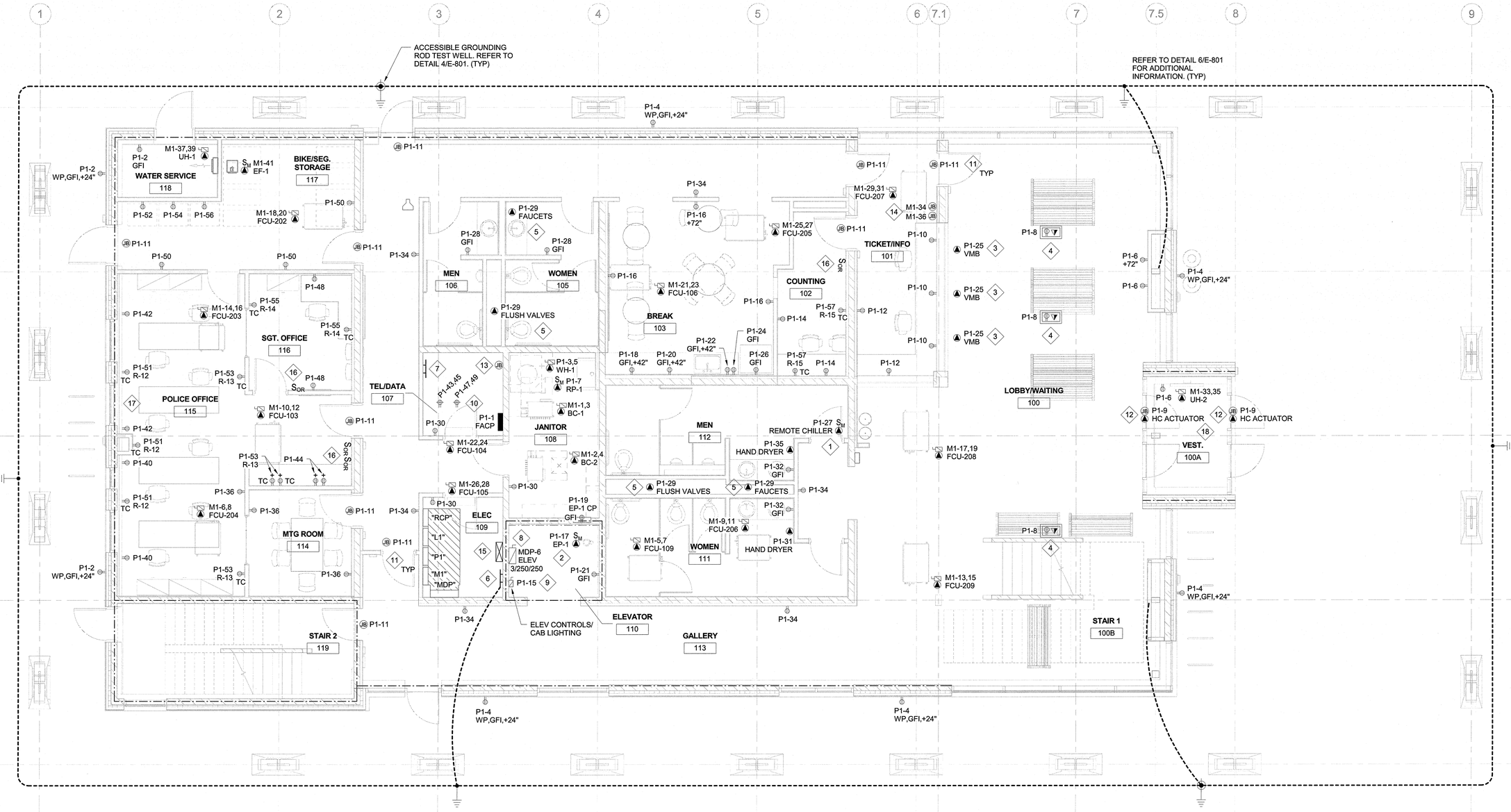

1 ELECTRICAL POWER PLAN LEVEL 1
1/4" = 1'-0"

POWER PLAN KEY NOTES:

1. PROVIDE 120V CIRCUIT AND MAKE CONNECTION TO ELECTRIC WATER COOLER REMOTE CHILLER LOCATED ABOVE CEILING. COORDINATE LOCATION.
2. PROVIDE NEMA-4X JUNCTION BOX AND DISCONNECT FOR ELEVATOR PIT SUMP PUMP EP-1. PROVIDE CONDUIT FROM JUNCTION BOX TO CONTROLLER. COORDINATE WITH PLUMBING CONTRACTOR.
3. PROVIDE 120V CIRCUIT AT 96" AFF FOR VISUAL MESSAGE BOARD. COORDINATE LOCATION.
4. COMBINATION FLOOR BOX. PROVIDE LEGRAND RPSFB-OG ON-GRADE RECTANGULAR DUAL SERVICE METAL CONCRETE FLOOR BOX WITH RPAV3CTCGY MULTIPLE SERVICE FLOOR BOX COVER KIT. PROVIDE ONE (1) 120V CIRCUIT AS SHOWN AND ONE (1) 1" CONDUIT TO NEAREST CABLE TRAY. REFER TO SECURITY DRAWINGS FOR CABLE TRAY INSTALLATION. COORDINATE LOCATION.
5. PROVIDE 120V CIRCUIT FOR AUTOMATIC FAUCET AND FLUSH VALVE TRANSFORMERS PROVIDED BY PLUMBING CONTRACTOR. COORDINATE INSTALLATION.
6. PROVIDE GROUND BUS BAR. REFER TO DETAILS 1/E-801 AND 3/E-801. COORDINATE LOCATION.
7. PROVIDE GROUND BUS BAR. REFER TO DETAIL 1/E-801. COORDINATE LOCATION.
8. PROVIDE DISCONNECT FOR ELEVATOR PUMP MOTOR. DISCONNECT SHALL BE MOUNTED BEHIND ACCESS DOOR WITH MANUFACTURER-PROVIDED SHROUD. COORDINATE LOCATION AND REQUIREMENTS WITH ELEVATOR MANUFACTURER.
9. PROVIDE DISCONNECT WITH 120V GFCI PROTECTED CIRCUIT FOR ELEVATOR CAB LIGHTING AND ALARM. DISCONNECT SHALL BE MOUNTED BEHIND ACCESS DOOR WITH MANUFACTURER-PROVIDED SHROUD. COORDINATE LOCATION AND REQUIREMENTS WITH ELEVATOR MANUFACTURER.
10. PROVIDE RECEPTACLES AS SHOWN AT CABLE TRAY FOR DATA RACKS. REFER TO SECURITY DRAWINGS. COORDINATE LOCATIONS AND REQUIREMENTS.
11. PROVIDE JUNCTION BOX ABOVE CEILING WITH 120V CIRCUIT FOR DOOR CONTROL POWER. REFER TO SECURITY DRAWINGS. COORDINATE LOCATION AND REQUIREMENTS.
12. PROVIDE JUNCTION BOX WITH 120V CIRCUIT AS SHOWN FOR AUTOMATIC DOOR CONTROL POWER. COORDINATE LOCATION AND REQUIREMENTS.
13. PROVIDE COPPER GROUNDING STRIP FOR STATIC DISSIPATIVE FLOOR. PROVIDE JUNCTION BOX AND MAKE GROUNDING CONNECTION TO BE BONDED AT NEAREST RECEPTACLE BOX. REFER TO DETAIL 5/E-801. COORDINATE LOCATION.
14. PROVIDE TWO (2) JUNCTION BOXES WITH TWO (2) 120V CIRCUITS AS SHOWN IN TICKET/INFO 101 FOR CEILING FAN WIRELESS WALL CONTROLLERS PROVIDED BY MECHANICAL CONTRACTOR. ONE CIRCUIT SHALL CONTROL LOBBY FANS CF-1 AND CF-2 AND THE OTHER SHALL CONTROL EXTERIOR OVERHANG FANS CF-3 AND CF-4. EACH WALL CONTROLLER SHALL SHARE SAME CIRCUIT AS LINKED FANS AND SHALL BE LOCATED WITHIN 50'-0" OF CLOSEST LINKED FAN. REFER TO LEVEL 2 POWER PLAN FOR FAN LOCATIONS. COORDINATE INSTALLATION WITH MANUFACTURER.
15. PROVIDE INDIVIDUAL CIRCUIT METERING SYSTEM, INCLUDING ONE (1) CABINET ENCLOSURE, NINE (9) INSTALLED POWER METERS, NINE (9) SETS CURRENT TRANSFORMERS (ONE SET INSTALLED AT EACH METERED CIRCUIT), AND WIRING BACK TO CABINET ENCLOSURE. REFER TO RISER DIAGRAM ON SHEET E-601 FOR METERED CIRCUITS. SIZE CURRENT TRANSFORMERS ACCORDINGLY.
16. PROVIDE PLUG LOAD CONTROL OVERRIDE SWITCH FOR EACH RELAY CONTROLLED RECEPTACLE CIRCUIT IN AREA SERVED. PROVIDE WIRING BACK TO RELAY CONTROL PANEL.
17. FEED TO RECEPTACLES ALONG EXTERIOR WALL SHALL RUN HORIZONTALLY IN 30" GYPSUM BOARD BASE.
18. FEED TO ELECTRICAL DEVICES SHALL BE RUN UNDERSLAB.

GENERAL NOTES:

1. ALL PENETRATIONS OF CROSS LAMINATED TIMBER CONSTRUCTION (CLT) SHALL BE CAREFULLY PRE-COORDINATED WITH CLT SUPPLIER. ELECTRICAL CONTRACTOR WILL BE RESPONSIBLE FOR IDENTIFYING, CONFIRMING, AND COORDINATION OF ANY AND ALL CONDUITS AND ASSOCIATED APPURTENANCES WELL IN ADVANCE OF ANY CONSTRUCTION.
2. ANY AND ALL ELEMENTS REQUIRED FOR A COMPLETE AND WORKING SYSTEM NECESSARY FOR ELECTRICAL OPERATION THAT WILL BE WALL-MOUNTED ON THE CLT WILL NEED TO BE COORDINATED IN AREAS WITH A CHASE BEHIND FOR POKE THROUGH PENETRATION OF CLT WALL.

FIRE RATING LEGEND

- 1-HR FIRE RATED WALL LINE
- 2-HR FIRE RATED WALL LINE
- CROSS LAMINATED TIMBER

Greenville NORTH CAROLINA

JACOBS
333 Fayetteville Street, Suite 1100
Raleigh, NC 27601
PH: 919-334-3100 FX: 919-334-3122 www.jacobs.com
North Carolina Engineering Firm License No. F-287
North Carolina Architectural Firm Reg. No. 50757
AYERS SAINT GROSS

Consultants:
ARK Consulting Group, PLLC
Coaly Design
Landscape Architecture + Land Planning

Seals:

NORTH CAROLINA PROFESSIONAL ENGINEER SEAL 025653 MARK WILLIS

General Notes:

Project Client:
Owner

GREENVILLE TRANSPORTATION ACTIVITY CENTER
600 S. Pitt Street, Greenville, NC

Number	Description	Date
0	IFC	05.10.2016

Key Plan:

Project North

CAD File:
Project No.: L3005900
Copyright: 2015 Jacobs Engineering Group

Drawing Sheet Title:
ELECTRICAL POWER PLAN LEVEL 1

Drawing Sheet Number:
E-201

Owner's Drawing Sheet No.:

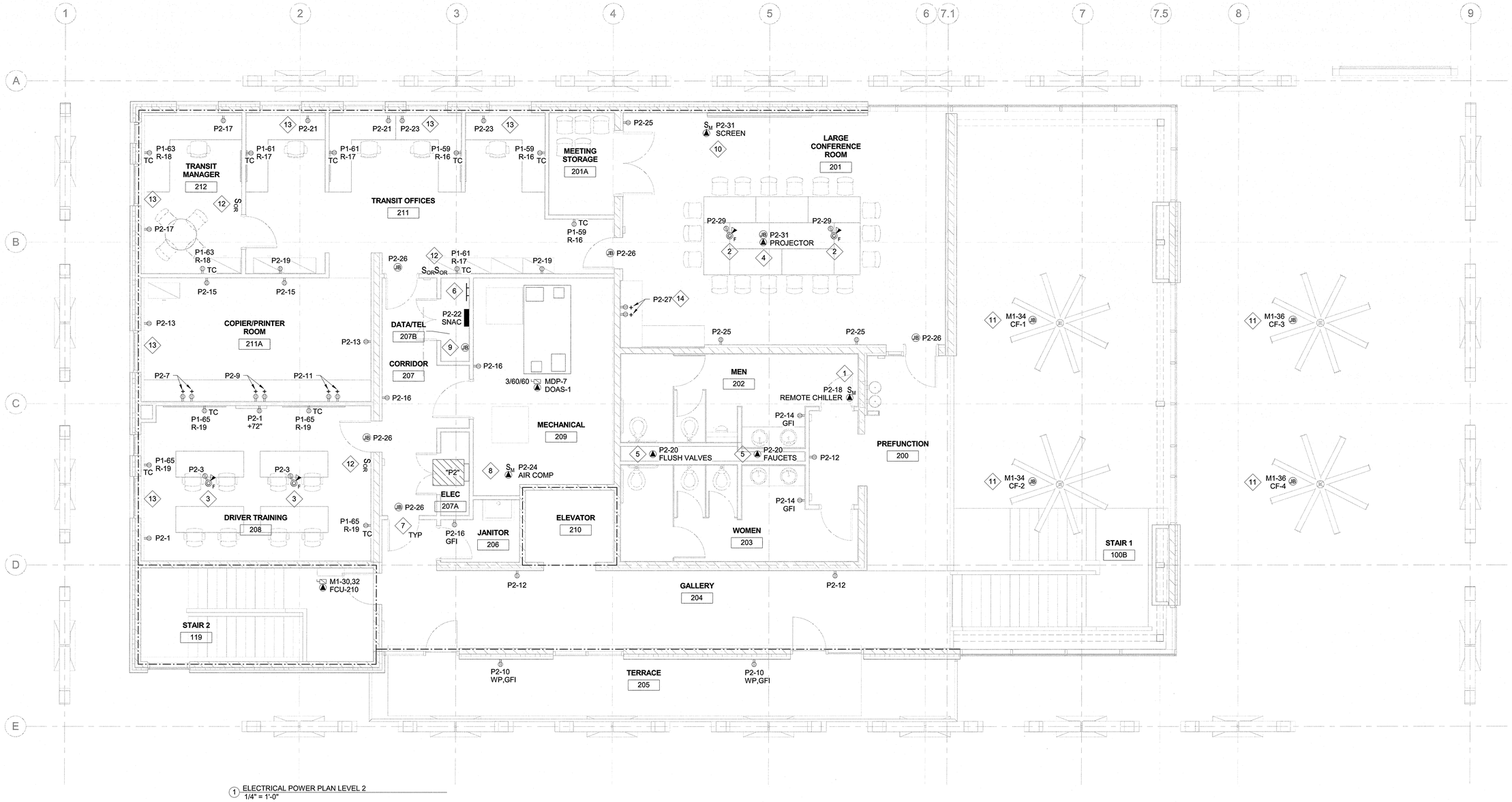

1 ELECTRICAL POWER PLAN LEVEL 2
1/4" = 1'-0"

POWER PLAN KEY NOTES:

1. PROVIDE 120V CIRCUIT AND MAKE CONNECTION TO ELECTRIC WATER COOLER REMOTE CHILLER LOCATED ABOVE CEILING. COORDINATE LOCATION.
2. COMBINATION POKE-THROUGH FLOOR BOX. PROVIDE LEGRAND 6ATCPAVGY PRE-WIRED AUDIO/VIDEO ASSEMBLY WITH SURFACE STYLE COVER TO BE INSTALLED IN 6" CORE DRILLED HOLE THROUGH FLOOR. PROVIDE ONE (1) 120V CIRCUIT AS SHOWN, ONE (1) 1" CONDUIT TO CEILING-MOUNTED PROJECTOR, AND ONE (1) 1" CONDUIT TO NEAREST CABLE TRAY. REFER TO SECURITY DRAWINGS FOR CABLE TRAY INSTALLATION. COORDINATE LOCATION.
3. COMBINATION POKE-THROUGH FLOOR BOX. PROVIDE LEGRAND 6ATCPAVGY PRE-WIRED AUDIO/VIDEO ASSEMBLY WITH SURFACE STYLE COVER TO BE INSTALLED IN 6" CORE DRILLED HOLE THROUGH FLOOR. PROVIDE ONE (1) 120V CIRCUIT AS SHOWN, ONE (1) 1" CONDUIT TO ABOVE FINISHED CEILING IN ROOM BEING SERVED, AND ONE (1) 1" CONDUIT TO NEAREST CABLE TRAY. REFER TO SECURITY DRAWINGS FOR CABLE TRAY INSTALLATION. COORDINATE LOCATION.
4. CEILING-MOUNTED PROJECTOR. PROVIDE ONE (1) 120V CIRCUIT AS SHOWN AND ONE (1) 1" CONDUIT TO NEAREST CABLE TRAY. REFER TO SECURITY DRAWINGS FOR CABLE TRAY INSTALLATION. COORDINATE LOCATION.
5. PROVIDE 120V CIRCUIT FOR AUTOMATIC FAUCET AND FLUSH VALVE TRANSFORMERS PROVIDED BY PLUMBING CONTRACTOR. COORDINATE INSTALLATION.
6. PROVIDE GROUND BUS BAR. REFER TO DETAIL 1/E-801.
7. PROVIDE JUNCTION BOX ABOVE CEILING WITH 120V CIRCUIT FOR DOOR CONTROL POWER. REFER TO SECURITY DRAWINGS. COORDINATE LOCATION AND REQUIREMENTS.
8. AIR COMPRESSOR FOR DRY PIPE SPRINKLER SYSTEM. PROVIDE 120V CIRCUIT AND DISCONNECTING MEANS PER NEC. COORDINATE LOCATION AND REQUIREMENTS.
9. PROVIDE COPPER GROUNDING STRIP FOR STATIC DISSIPATIVE FLOOR. PROVIDE JUNCTION BOX AND MAKE GROUNDING CONNECTION TO BE BONDED AT NEAREST RECEPTACLE BOX. REFER TO DETAIL 5/E-801. COORDINATE LOCATION.
10. CEILING MOUNTED MOTORIZED SCREEN. PROVIDE ONE (1) 120V CIRCUIT AS SHOWN AND ONE (1) 3/4" CONDUIT TO LOW VOLTAGE CONTROLLER LOCATION. COORDINATE INSTALLATION.
11. PROVIDE 120V CIRCUITS AS SHOWN TO CEILING FANS. FANS SHALL BE CONTROLLED BY WIRELESS WALL CONTROLLERS LOCATED IN TICKET/INFO 101. LOBBY FANS CF-1 AND CF-2 SHALL SHARE ONE CONTROLLER AND EXTERIOR OVERHANG FANS CF-3 AND CF-4 SHALL SHARE ONE CONTROLLER. EACH WALL CONTROLLER SHALL SHARE SAME CIRCUIT AS LINKED FANS AND SHALL BE LOCATED WITHIN 50'-0" OF CLOSEST LINKED FAN. REFER TO LEVEL 1 POWER PLAN FOR WALL CONTROLLER LOCATIONS. COORDINATE INSTALLATION WITH MANUFACTURER. SEE ARCHITECTURAL REFLECTED CEILING PLAN A-302 FOR SUGGESTED CONDUIT ROUTINGS IN EXPOSED CLT CEILING AREAS.
12. PROVIDE PLUG LOAD CONTROL OVERRIDE SWITCH FOR EACH RELAY CONTROLLED RECEPTACLE CIRCUIT IN AREA SERVED. PROVIDE WIRING BACK TO RELAY CONTROL PANEL.
13. FEED TO RECEPTACLES ALONG EXTERIOR WALL SHALL RUN HORIZONTALLY IN 30" GYPSUM BOARD BASE.
14. FEED TO RECEPTACLES SHALL BE RUN FROM BELOW. EXPOSED CLT ABOVE COUNTERTOP.

GENERAL NOTES:

1. ALL PENETRATIONS OF CROSS LAMINATED TIMBER CONSTRUCTION (CLT) SHALL BE CAREFULLY PRE-COORDINATED WITH CLT SUPPLIER. ELECTRICAL CONTRACTOR WILL BE RESPONSIBLE FOR IDENTIFYING, CONFIRMING, AND COORDINATION OF ANY AND ALL CONDUITS AND ASSOCIATED APPURTENANCES WELL IN ADVANCE OF ANY CONSTRUCTION.
2. ANY AND ALL ELEMENTS REQUIRED FOR A COMPLETE AND WORKING SYSTEM NECESSARY FOR ELECTRICAL OPERATION THAT WILL BE WALL-MOUNTED ON THE CLT WILL NEED TO BE COORDINATED IN AREAS WITH A CHASE BEHIND FOR POKE THROUGH PENETRATION OF CLT WALL.

FIRE RATING LEGEND

- 1-HR FIRE RATED WALL LINE
- 2-HR FIRE RATED WALL LINE
- CROSS LAMINATED TIMBER

Greenville
NORTH CAROLINA

JACOBS
333 Fayetteville Street, Suite 1100
Raleigh, NC 27601
PH: 919-334-3100 FX: 919-334-3122 www.jacobs.com
North Carolina Engineering Firm License No. F-287
North Carolina Architectural Firm Reg. No. 50757

AYERS SAINT GROSS

Consultants:
ARK Consulting Group, PLLC
Coaly Design
Landscape Architecture + Land Planning

Seals:

NORTH CAROLINA PROFESSIONAL ENGINEER SEAL 025653 5-9-16 MARK WILLIS

General Notes:

Project Client:
Owner

GREENVILLE TRANSPORTATION ACTIVITY CENTER
600 S. Pitt Street, Greenville, NC

Number	Description	Date
0	IFC	05.10.2016

Key Plan:

Project North

CAD File:	
Project No.:	L3005900
Copyright:	2015 Jacobs Engineering Group

Drawing Sheet Title:
ELECTRICAL POWER PLAN LEVEL 2

Drawing Sheet Number:
E-202

Owner's Drawing Sheet No.:

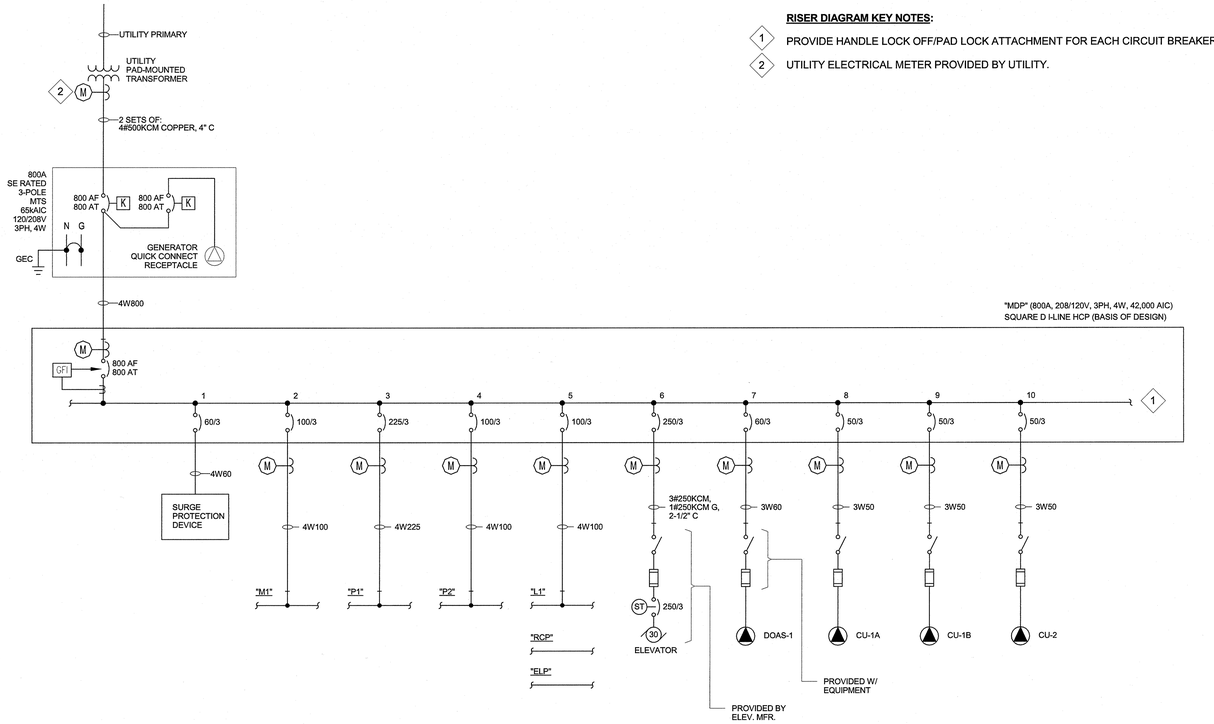

1 ELECTRICAL RISER DIAGRAM
NTS

RISER DIAGRAM KEY NOTES:

1. PROVIDE HANDLE LOCK OFF/PAD LOCK ATTACHMENT FOR EACH CIRCUIT BREAKER.
2. UTILITY ELECTRICAL METER PROVIDED BY UTILITY.

ELECTRICAL LOAD SUMMARY

LOADS	CONNECTED kVA	DEMAND FACTOR	DEMAND kVA
LIGHTING *	34.1	1.00	34.1
RECEPTACLE	23.9	0.71	17.0
MOTOR	33.8	1.00	33.8
HVAC	62.0	1.00	62.0
KITCHEN	-	-	-
OTHER	23.1	1.00	23.1
LARGEST MOTOR	31.7	0.25	7.9
FUTURE	-	1.00	-
	208.6		177.9
			494 A (@208V)

* BASED ON 3.5W/SF PER NEC. ACTUAL CONNECTED IS 11.1 kVA.

Greenville
NORTH CAROLINA

JACOBS
333 Fayetteville Street, Suite 1100
Raleigh, NC 27601
PH: 919-334-3100 FX: 919-334-3122 www.jacobs.com
North Carolina Engineering Firm License No. F-287
North Carolina Architectural Firm Reg. No. 50757

AYERS SAINT GROSS

Consultants:
ARK Consulting Group, PLLC

Coaly Design
Landscape Architecture + Land Planning

Seals:

NORTH CAROLINA PROFESSIONAL ENGINEER SEAL 025683 5-9-16 ENGINEER MARK WILLIS

General Notes:

Project Client:
Owner

GREENVILLE TRANSPORTATION ACTIVITY CENTER
600 S. Pitt Street, Greenville, NC

Number	Description	Date
0	IFC	05.10.2016

Key Plan: Project North

CAD File:
Project No.: L3005900
Copyright: 2015 Jacobs Engineering Group

Drawing Sheet Title:
ELECTRICAL RISER

Drawing Sheet Number:
E-601

Owner's Drawing Sheet No.:

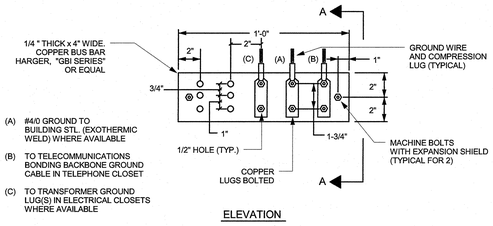

ELEVATION

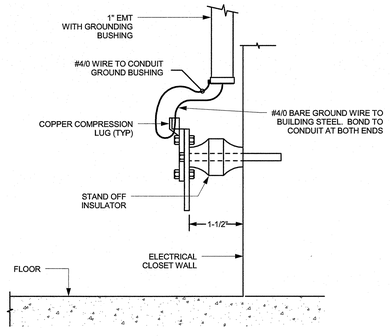

SECTION 'A-A'

[USE WITH DE016059]

NOTE: AT MAIN TELECOMMUNICATIONS SERVICE ROOM ENTRANCE PROVIDE #1/0 AWG TO MAIN ELECTRICAL ROOM GROUND BUS

"ELECTRICAL" OR "TELEPHONE" CLOSET GROUND BUS DETAIL
1 NTS

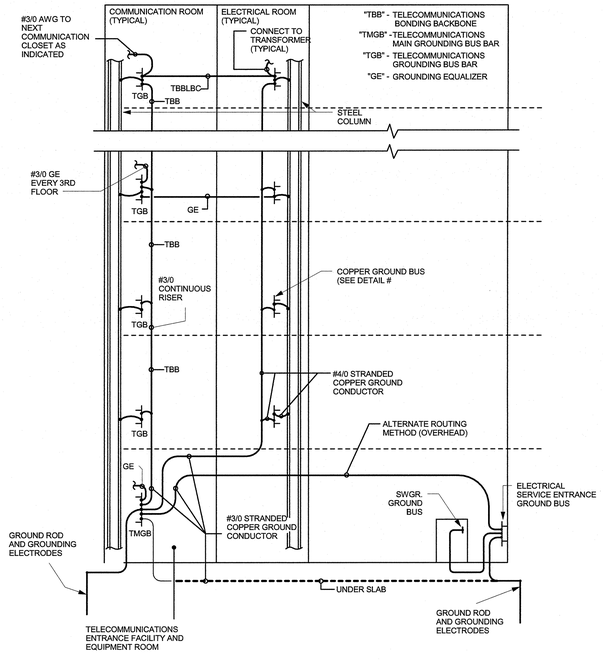

NOTE: PROVIDE TELECOMMUNICATIONS GROUNDING PER ANSI STANDARD J-STD-607-A

POWER & COMMUNICATION GROUNDING SYSTEM RISER DIAGRAM (STEEL BUILDING)
2 NTS

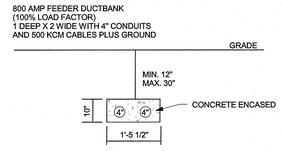

8 600V 800A DUCTBANK
NTS

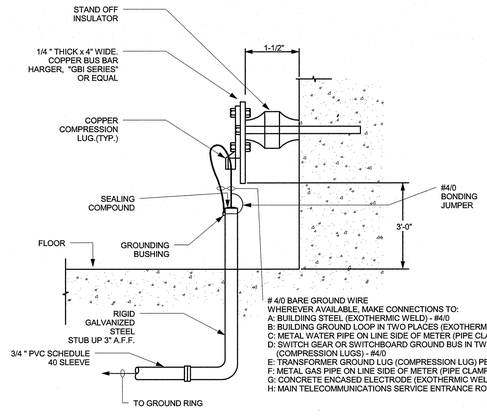

4/0 BARE GROUND WIRE WHEREVER AVAILABLE. MAKE CONNECTIONS TO:
A: BUILDIING STEEL (EXOTHERMIC WELD) - #4/0
B: BUILDING GROUND LOOP IN TWO PLACES (EXOTHERMIC WELD) - 2X #4/0
C: METAL WATER PIPE ON LINE SIDE OF METER (PIPE CLAMP) - #4/0
D: SWITCH GEAR OR SWITCHBOARD GROUND BUS IN TWO PLACES (COMPRESSION LUGS) - #4/0
E: TRANSFORMER GROUND LUG (COMPRESSION LUG) PER XFMR SCHEDULE
F: METAL GAS PIPE ON LINE SIDE OF METER (PIPE CLAMP) - #6 AWG MINIMUM
G: CONCRETE ENCASED ELECTRODE (EXOTHERMIC WELD TO REBAR) - #4/0
H: MAIN TELECOMMUNICATIONS SERVICE ENTRANCE ROOM GROUND BUS - #1/0

"MAIN ELECTRICAL ROOM" GROUND BUS DETAIL
3 NTS

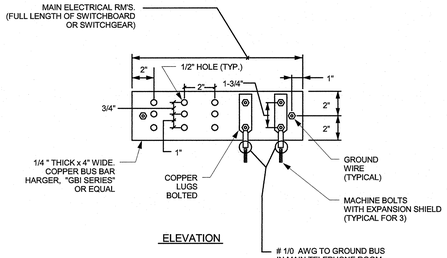

ELEVATION

1/0 AWG TO GROUND BUS IN MAIN TELEPHONE ROOM (COMPRESSION LUG). OTHER METAL LOUVERS, DOOR FRAMES, PIPING, AND HVAC DUCTS WITHIN ROOM WITH #6 AWG (CLAMPS).

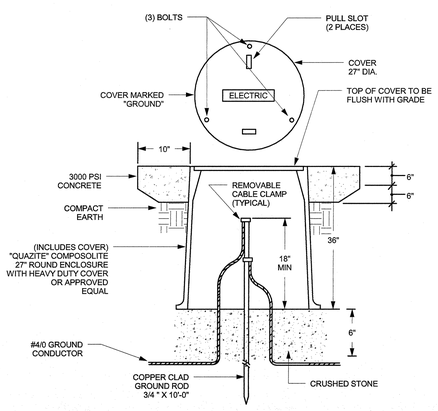

NOTE:
LOCATE WHERE SUFFICIENT SITE CLEARING EXISTS FOR "FALL OF POTENTIAL IMPEDANCE TEST".

ACCESSIBLE GROUND ROD TEST WELL
4 NTS

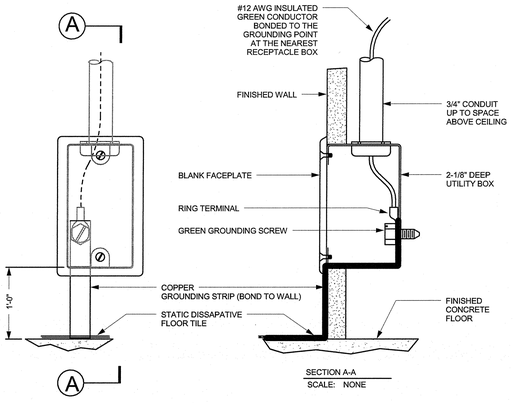

SECTION A-A
SCALE: NONE

STATIC DISSIPATIVE FLOOR GROUNDING
5 NTS

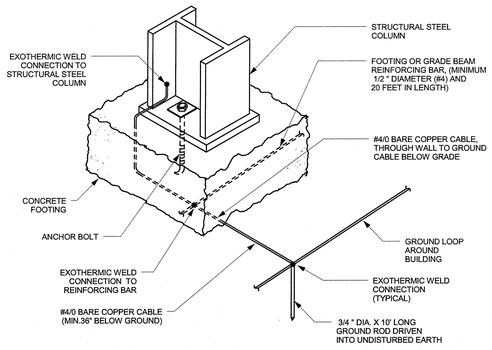

NOTE: CONNECT TO STEEL AND REBAR AT EVERY GROUNDED COLUMN AS SHOWN ON PLANS.

STEEL COLUMN GROUNDING DETAIL
6 NTS

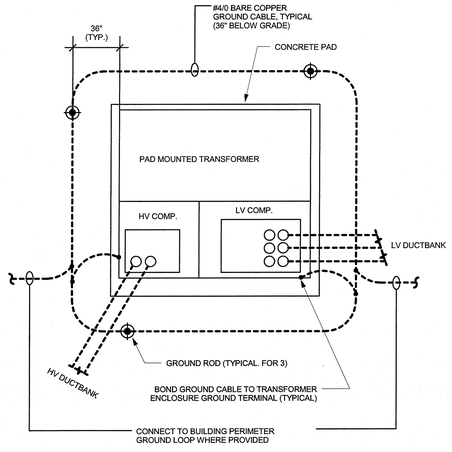

PAD MOUNTED TRANFORMER GROUNDING DETAIL
7 NTS

Greenville
NORTH CAROLINA

JACOBS
333 Fayetteville Street, Suite 1100
Raleigh, NC 27601
PH: 919-334-3100 FX: 919-334-3122 www.jacobs.com
North Carolina Engineering Firm License No. F-287
North Carolina Architectural Firm Reg. No. 50757

AYERS SAINT GROSS

Consultants:
ARK Consulting Group, PLLC

Coaly Design
Landscape Architecture + Land Planning

Seals:

NORTH CAROLINA PROFESSIONAL ENGINEER SEAL 025863 5-9-16 MARK WILLIS

General Notes:

Project Client:
Owner

GREENVILLE TRANSPORTATION ACTIVITY CENTER
600 S. Pitt Street, Greenville, NC

Number	Description	Date
0	IFC	05.10.2016

Key Plan: Project North

CAD File:
Project No.: L3005900
Copyright: 2015 Jacobs Engineering Group

Drawing Sheet Title:
ELECTRICAL DETAILS

Drawing Sheet Number:
E-801

Owner's Drawing Sheet No.:

AW

ENGINEERING JUDGMENT FIRESTOP DETAIL

PROJECT : GTAC
CONTRACTOR : JACOBS
F-RATING = 1-HR. (SEE NOTE NO. 3 BELOW)

FRONT VIEW SECTION A-A

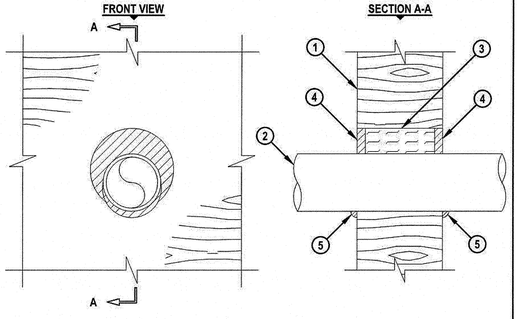

1. SOLID CROSS-LAMINATED TIMBER PANEL WALL (MINIMUM 6-2/3" THICK) AS DESCRIBED IN THE PRELIMINARY CLT FIRE RESISTANCE TESTING REPORT, PROJECT #301006155 (1-HR. FIRE-RATING).
2. PENETRATING ITEM TO BE ONE OF THE FOLLOWING :
   A. MAXIMUM 4" NOMINAL DIAMETER EMT.
   B. MAXIMUM 4" NOMINAL DIAMETER STEEL CONDUIT.
3. MINERAL WOOL (MIN. 4 PCF DENSITY) TIGHTLY PACKED, RECESSED TO ACCOMMODATE SEALANT.
4. MINIMUM 5/8" DEPTH HILTI FS-ONE MAX INTUMESCENT FIRESTOP SEALANT, FLUSH WITH WALL SURFACES.
5. MINIMUM 1/2" BEAD HILTI FS-ONE MAX INTUMESCENT FIRESTOP SEALANT APPLIED AT POINT OF CONTACT.

NOTES : 1. MAXIMUM DIAMETER OF OPENING = 6-1/2".
2. ANNULAR SPACE = MINIMUM 0", MAXIMUM 2-1/2".
3. FIRE-RATING OF ASSEMBLY IS DEPENDENT UPON THE PERFORMANCE OF WALL ASSEMBLY UNDER FIRE CONDITIONS.

THIS ENGINEERING JUDGMENT REPRESENTS A FIRESTOP SYSTEM THAT WOULD BE EXPECTED TO PASS THE STATED RATINGS IF TESTED.
(REFERENCE : UL/cUL SYSTEM NO. W-L-1054)

HILTI Hilti Firestop Systems	HILTI, Inc. Plano, Texas USA (800) 879-8000	Sheet 1 of 1	Drawing No.
	Designed by Brett Littlefield	Scale 3/16" = 1"	220323a
		Date Oct. 30, 2015	

Saving Lives through Innovation and Education

AW

ENGINEERING JUDGMENT FIRESTOP DETAIL

PROJECT : GTAC
CONTRACTOR : JACOBS
F-RATING = 2-HR. (SEE NOTE NO. 3 BELOW)

FRONT VIEW SECTION A-A

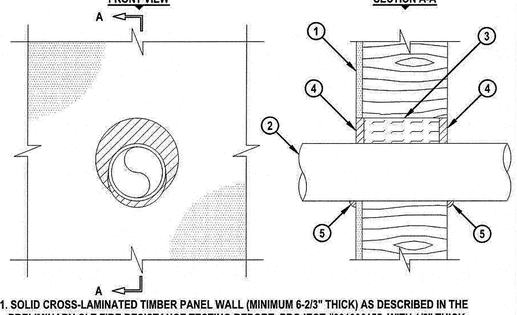

1. SOLID CROSS-LAMINATED TIMBER PANEL WALL (MINIMUM 6-2/3" THICK) AS DESCRIBED IN THE PRELIMINARY CLT FIRE RESISTANCE TESTING REPORT, PROJECT #301006155, WITH 1/2" THICK GLASS-FIBER FACED GYPSUM PANEL ATTACHED. (2-HR. FIRE-RATING).
2. PENETRATING ITEM TO BE ONE OF THE FOLLOWING :
   A. MAXIMUM 4" NOMINAL DIAMETER EMT.
   B. MAXIMUM 4" NOMINAL DIAMETER STEEL CONDUIT.
3. MINERAL WOOL (MIN. 4 PCF DENSITY) TIGHTLY PACKED, RECESSED TO ACCOMMODATE SEALANT.
4. MINIMUM 5/8" DEPTH HILTI FS-ONE MAX INTUMESCENT FIRESTOP SEALANT, FLUSH WITH WALL SURFACES.
5. MINIMUM 1/2" BEAD HILTI FS-ONE MAX INTUMESCENT FIRESTOP SEALANT APPLIED AT POINT OF CONTACT.

NOTES : 1. MAXIMUM DIAMETER OF OPENING = 6-1/2".
2. ANNULAR SPACE = MINIMUM 0", MAXIMUM 2-1/2".
3. FIRE-RATING OF ASSEMBLY IS DEPENDENT UPON THE PERFORMANCE OF WALL ASSEMBLY UNDER FIRE CONDITIONS.

THIS ENGINEERING JUDGMENT REPRESENTS A FIRESTOP SYSTEM THAT WOULD BE EXPECTED TO PASS THE STATED RATINGS IF TESTED.
(REFERENCE : UL/cUL SYSTEM NO. W-L-1054)

HILTI Hilti Firestop Systems	HILTI, Inc. Plano, Texas USA (800) 879-8000	Sheet 1 of 1	Drawing No.
	Designed by Brett Littlefield	Scale 3/16" = 1"	220324a
		Date Oct. 30, 2015	

Saving Lives through Innovation and Education

Greenville
NORTH CAROLINA

JACOBS
333 Fayetteville Street, Suite 1100
Raleigh, NC 27601
PH: 919-334-3100 FX: 919-334-3122 www.jacobs.com
North Carolina Engineering Firm License No. F-287
North Carolina Architectural Firm Reg. No. 50757

AYERS SAINT GROSS

Consultants:
ARK Consulting Group, PLLC

Coaly Design
Landscape Architecture + Land Planning

Seals:

NORTH CAROLINA PROFESSIONAL ENGINEER SEAL 025882 8-9-16 ENGINEER MARK WILLIS

General Notes:

Project Client:
Owner

GREENVILLE
TRANSPORTATION
ACTIVITY CENTER
600 S. Pitt Street, Greenville, NC

Number	Description	Date
0	IFC	05.10.2016

Key Plan: Project North

CAD File:
Project No.: L3005900
Copyright: 2015 Jacobs Engineering Group

Drawing Sheet Title:
ELECTRICAL DETAILS

Drawing Sheet Number:
E-802

Owner's Drawing Sheet No.:

PANEL NO. P1

NEUTRAL BUS: 100% | VOLTAGE: 208Y/120V, 3PH, 4W & G
GROUND BUS: YES | MAINS: 225A
ISOLATED GROUND BUS: NO | MAIN CIR. BKR.: MLO
LIGHTING AND RECEPTACLE PANEL SCHEDULE | MOUNTING: SURFACE | AIC RATING: 22,000

CIR. NO.	DESCRIPTION	LOAD VA	BREAKER amps / poles		BREAKER amps / poles	LOAD VA	DESCRIPTION	CIR. NO.
1	FACP	500	20 / 1		20 / 1	720	REC - EXTERIOR, WATER SERVICE 118	2
3	WH-1 (2W30)	4500	30 / 2		20 / 1	900	REC - EXTERIOR	4
5					20 / 1	540	REC - LOBBY 100	6
7	RP-1	55	20 / 1		20 / 1	540	REC - FLOOR LOBBY 100	8
9	AUTOMATIC DOORS	500	20 / 1		20 / 1	540	REC - TICKET/INFO 101	10
11	SECURITY DOORS	500	20 / 1		20 / 1	360	REC - TICKET/INFO 101	12
13	SPARE		20 / 1		20 / 1	360	REC - COUNTING 102	14
15	ELEVATOR CONTORLS, CAB LIGHTS	500	20 / 1	*	20 / 1	540	REC - BREAK RM 103	16
17	EP-1	960	20 / 1		20 / 1	180	REC - BREAK RM 103	18
19	EP-1 CONTROL PANEL	500	20 / 1		20 / 1	180	REC - BREAK RM 103	20
21	REC - ELEVATOR PIT	180	20 / 1		20 / 1	180	REC - BREAK RM 103	22
23	VMB - BUS BAY CANOPY (2W30)	540	20 / 1		20 / 1	800	REC - ICE MAKER BREAK RM 103	24
25	VMB - LOBBY	135	20 / 1		20 / 1	800	REC - REFRIGERATOR BREAK RM 103	26
27	EWC REMOTE CHILLER	490	20 / 1		20 / 1	360	REC - RESTROOMS 105, 106	28
29	AUTOMATIC FAUCETS/FLUSH VALVES	200	20 / 1		20 / 1	540	REC - TELE/DATA 106, JAN 108, ELEC 109	30
31	HAND DRYER WOMEN 111	1400	20 / 1		20 / 1	360	REC - RESTROOMS 111, 112	32
33	SPARE		20 / 1		20 / 1	1080	REC - CORRIDOR, GALLERY	34
35	HAND DRYER MEN 112	1400	20 / 1		20 / 1	540	REC - MEETING RM 114/115	36
37	SPARE		20 / 1		20 / 1		SPARE	38
39	HOTBOX HEATER	500	20 / 1		20 / 1	360	REC - POLICE OFFICE 115	40
41	HOTBOX HEATER	500	20 / 1		20 / 1	360	REC - POLICE OFFICE 115	42
43	REC - RACK 1 TELE/DATA 107	180	20 / 1		20 / 1	360	REC - POLICE OFFICE 115	44
45	REC - RACK 1 TELE/DATA 107	180	20 / 1		20 / 1		SPARE	46
47	REC - RACK 2 TELE/DATA 107	180	20 / 1		20 / 1	360	REC - SERGEANT OFFICE 116	48
49	REC - RACK 2 TELE/DATA 107	180	20 / 1		20 / 1	540	REC - BIKE/SEGWAY STORAGE 117	50
51	REC - POLICE OFFICE 115	540	20 / 1		20 / 1	180	REC - SEGWAY CHARGER	52
53	REC - POLICE OFFICE 115	720	20 / 1		20 / 1	180	REC - SEGWAY CHARGER	54
55	REC - SERGEANT OFFICE 116	360	20 / 1		20 / 1	180	REC - SEGWAY CHARGER	56
57	REC - COUNTING 102	360	20 / 1		20 / 1		SPARE	58
59	REC - TRANSIT OFFICES 211	540	20 / 1		20 / 1		SPARE	60
61	REC - TRANSIT OFFICES 211	540	20 / 1		20 / 1		SPARE	62
63	REC - TRANSIT MANAGER 212	360	20 / 1		20 / 1		SPARE	64
65	REC - DRIVER TRAINING 208	720	20 / 1		20 / 1		SPARE	66
67	SPACE ONLY		- / 1		- / 1		SPACE ONLY	68
69	SPACE ONLY		- / 1		- / 1		SPACE ONLY	70
71	SPACE ONLY		- / 1		- / 1		SPACE ONLY	72
73	SPACE ONLY		- / 1		- / 1		SPACE ONLY	74
75	SPACE ONLY		- / 1		- / 1		SPACE ONLY	76
77	SPACE ONLY		- / 1		- / 1		SPACE ONLY	78
79	SPACE ONLY		- / 1		- / 1		SPACE ONLY	80
81	SPACE ONLY		- / 1		- / 1		SPACE ONLY	82
83	SPACE ONLY		- / 1		- / 1		SPACE ONLY	84
	SUB TOTAL	18220				12040	SUB TOTAL	

LEGEND:			REMARKS:
	TOTAL: [AMPS]	65.7 ØA | 83.3 ØB | #### ØC	
** 6 mA GROUND FAULT CIRCUIT BREAKER	TOTAL: 3Ø	30.3 KVA	PROVIDE HANDLE LOCKOFF/PADLOCK ATTACHMENT FOR EACH
* 30 mA GROUND FAULT CIRCUIT BREAKER	TOTAL: 3Ø	84.1 AMPS	CB.
# LOCK-ON CIRCUIT BREAKER HANDLE		DEMAND LOAD	
ST - SHUNT TRIP	TOTAL: 3Ø	74.5 AMPS	SQUARE D NQ (BASIS OF DESIGN)

PANEL NO. M1

NEUTRAL BUS: 100% | VOLTAGE: 208Y/120V, 3PH, 4W & G
GROUND BUS: YES | MAINS: 100A
ISOLATED GROUND BUS: NO | MAIN CIR. BKR.: MLO
LIGHTING AND RECEPTACLE PANEL SCHEDULE | MOUNTING: SURFACE | AIC RATING: 22,000

CIR. NO.	DESCRIPTION	LOAD VA	BREAKER amps / poles	BREAKER amps / poles	LOAD VA	DESCRIPTION	CIR. NO.
1	SPARE		20 / 1	20 / 1		SPARE	2
3	SPARE		20 / 1	20 / 1		SPARE	4
5	FCU-109	260	15 / 2	15 / 2	260	FCU-204	6
7							8
9	FCU-206	454	15 / 2	15 / 2	454	FCU-103	10
11							12
13	FCU-209	454	15 / 2	15 / 2	260	FCU- 203	14
15							16
17	FCU-208	454	15 / 2	15 / 2	454	FCU-202	18
19							20
21	FCU-106	454	15 / 2	15 / 2	63	FCU-104	22
23							24
25	FCU-205	454	15 / 2	15 / 2	63	FCU-105	26
27							28
29	FCU-207	454	15 / 2	15 / 2	63	FCU-210	30
31							32
33	UH-2	750	15 / 2	20 / 1	936	LOBBY FANS - CF-1, CF-2	34
35				20 / 1	936	EXTERIOR OVERHANG FANS - CF-3, CF-4	36
37	UH-1	2000	15 / 2	20 / 1		SPARE	38
39				20 / 1		SPARE	40
41	EF-1	204	20 / 1	20 / 1		SPARE	42
43	SPARE		20 / 1	15 / 3	234	BC-1	44
45	SPARE		20 / 1				46
47	SPARE		20 / 1				48
49	SPARE		20 / 1	15 / 3	234	BC-2	50
51	SPARE		20 / 1				52
53	SPARE		20 / 1				54
	SUB TOTAL	5938			3957	SUB TOTAL	

LEGEND:			REMARKS:
	TOTAL: [AMPS]	22.8 ØA | 31.6 ØB | 27.9 ØC	
** 6 mA GROUND FAULT CIRCUIT BREAKER	TOTAL: 3Ø	9.9 KVA	PROVIDE HANDLE LOCKOFF/PADLOCK ATTACHMENT FOR EACH
* 30 mA GROUND FAULT CIRCUIT BREAKER	TOTAL: 3Ø	27 AMPS	CB.
# LOCK-ON CIRCUIT BREAKER HANDLE		DEMAND LOAD	
ST - SHUNT TRIP	TOTAL: 3Ø	27 AMPS	SQUARE D NQ (BASIS OF DESIGN)

PANEL NO. L1

NEUTRAL BUS: 100% | VOLTAGE: 208Y/120V, 3PH, 4W & G
GROUND BUS: YES | MAINS: 100A
ISOLATED GROUND BUS: NO | MAIN CIR. BKR.: MLO
LIGHTING AND RECEPTACLE PANEL SCHEDULE | MOUNTING: SURFACE | AIC RATING: 22,000

CIR. NO.	DESCRIPTION	LOAD VA	BREAKER amps / poles		BREAKER amps / poles	LOAD VA	DESCRIPTION	CIR. NO.
1	LTS - 100, 200, 204, 207	522	20 / 1		20 / 1	735	LTS - SITE (2W30)	2
3	LTS - 101, 104, 113	632	20 / 1		20 / 1	584	LTS - SITE (2W30)	4
5	LTS - 102, 103, 105-109, 111, 112	655	20 / 1		20 / 1	793	LTS - SITE (2W30)	6
7	LTS - 114-118	497	20 / 1		20 / 1	584	LTS - SITE (2W30)	8
9	LTS - 201-203	767	20 / 1		20 / 1	453	LTS - SITE (2W30)	10
11	LTS - 201, 206, 207A, 208, 209, 211, 211A, 212	848	20 / 1		20 / 1	433	LTS - SITE (2W30)	12
13	LTS - STAIRWELL 119	406	20 / 1		20 / 1	1098	LTS - BUS BAY CANOPY (2W45)	14
15	LTS - ELEVATOR PIT	78	20 / 1		20 / 1	1159	LTS - BUS BAY CANOPY (2W45)	16
17	LTS - EMERGENCY LIGHTING PANEL	804	30 / 1		20 / 1	825	LTS - BUILDING OVERHANG	18
19	SPARE		20 / 1		20 / 1		SPARE	20
21	SPARE		20 / 1		20 / 1		SPARE	22
23	SPARE		20 / 1		20 / 1		SPARE	24
25	SPACE ONLY		- / 1		- / 1		SPACE ONLY	26
27	SPACE ONLY		- / 1		- / 1		SPACE ONLY	28
29	SPACE ONLY		- / 1		- / 1		SPACE ONLY	30
31	SPACE ONLY		- / 1		- / 1		SPACE ONLY	32
33	SPACE ONLY		- / 1		- / 1		SPACE ONLY	34
35	SPACE ONLY		- / 1		- / 1		SPACE ONLY	36
37	SPACE ONLY		- / 1		- / 1		SPACE ONLY	38
39	SPACE ONLY		- / 1		- / 1		SPACE ONLY	40
41	SPACE ONLY		- / 1		- / 1		SPACE ONLY	42
	SUB TOTAL	5209				6664	SUB TOTAL	

LEGEND:			REMARKS:
	1Ø AMPS	32.0 ØA | 30.5 ØB | 36.2 ØC	
** 6 mA GROUND FAULT CIRCUIT BREAKER	3Ø	11.9 KVA	PROVIDE HANDLE LOCKOFF/PADLOCK ATTACHMENT FOR EACH
* 30 mA GROUND FAULT CIRCUIT BREAKER	3Ø	33.0 AMPS	CB.
# LOCK-ON CIRCUIT BREAKER HANDLE		DEMAND LOAD	
ST - SHUNT TRIP	3Ø	33.0 AMPS	SQUARE D NQ (BASIS OF DESIGN)

PANEL NO. ELP

NEUTRAL BUS: 100% | VOLTAGE: 120V, 1PH, 2W & G
GROUND BUS: YES | MAINS: 30A
ISOLATED GROUND BUS: NO | MAIN CIR. BKR.: 30A
EMERGENCY LIGHTING INVERTER PANEL SCHEDULE | MOUNTING: SURFACE | AIC RATING: 22,000

CIR. NO.	DESCRIPTION	LOAD VA	BREAKER amps / poles		BREAKER amps / poles	LOAD VA	DESCRIPTION	CIR. NO.
1	LTS - EMERGENCY	258	20 / 1		20 / 1	273	LTS - EMERGENCY	2
3	LTS - EMERGENCY	273	20 / 1		20 / 1		SPARE	4
5	SPARE		20 / 1		20 / 1		SPARE	6
7	SPARE		20 / 1		20 / 1		SPARE	8
9	SPARE		20 / 1		20 / 1		SPARE	10
	SUB TOTAL	531				273	SUB TOTAL	

LEGEND:			REMARKS:
	1Ø AMPS	7.7 ØA | 3.9 ØB	
	1Ø	0.8 KVA	
	1Ø	6.7 AMPS	
		DEMAND LOAD	
	1Ø	8.4 AMPS	MYERS POWER PRODUCTS INC. (BASIS OF DESIGN)

PANEL NO. P2

NEUTRAL BUS: 100% | VOLTAGE: 208Y/120V, 3PH, 4W & G
GROUND BUS: YES | MAINS: 100A
ISOLATED GROUND BUS: NO | MAIN CIR. BKR.: MLO
LIGHTING AND RECEPTACLE PANEL SCHEDULE | MOUNTING: SURFACE | AIC RATING: 22,000

CIR. NO.	DESCRIPTION	LOAD VA	BREAKER amps / poles		BREAKER amps / poles	LOAD VA	DESCRIPTION	CIR. NO.
1	REC - DRIVER TRAINING 208	360	20 / 1		20 / 1		SPARE	2
3	REC - FLOOR DRIVER TRAINING 208	360	20 / 1		20 / 1		SPARE	4
5	SPARE		20 / 1		20 / 1		SPARE	6
7	REC - COPIER/PRINTER RM 211A	360	20 / 1		20 / 1		SPARE	8
9	REC - COPIER/PRINTER RM 211A	360	20 / 1		20 / 1	360	REC - TERRACE 205	10
11	REC - COPIER/PRINTER RM 211A	360	20 / 1		20 / 1	540	REC - GALLERY 204	12
13	REC - COPIER/PRINTER RM 211A	360	20 / 1		20 / 1	360	REC - RESTROOMS 202, 203	14
15	REC - COPIER/PRINTER RM 211A	360	20 / 1		20 / 1	540	REC - JAN 206, CORR 207, MECH 209	16
17	REC - TRANSIT MANAGER 212	360	20 / 1		20 / 1	490	EWC REMOTE CHILLER	18
19	REC - TRANSIT OFFICES 211	360	20 / 1		20 / 1	100	AUTOMATIC FAUCETS/FLUSH VALVES	20
21	REC - TRANSIT OFFICES 211	360	20 / 1		20 / 1	500	FA SNAC PANEL	22
23	REC - TRANSIT OFFICES 211	360	20 / 1		25 / 1	1176	AIR COMPRESSOR	24
25	REC - LARGE CONF RM 201	540	20 / 1		20 / 1	500	SECURITY DOORS	26
27	REC - LARGE CONF RM 201	360	20 / 1		20 / 1		SPARE	28
29	REC - FLOOR LARGE CONF RM 201	360	20 / 1		20 / 1		SPARE	30
31	REC - PROJ/SCREEN LARGE CONF RM 201	1000	20 / 1		20 / 1		SPARE	32
33	SPARE		20 / 1		20 / 1		SPARE	34
35	SPACE ONLY		- / 1		- / 1		SPACE ONLY	36
37	SPACE ONLY		- / 1		- / 1		SPACE ONLY	38
39	SPACE ONLY		- / 1		- / 1		SPACE ONLY	40
41	SPACE ONLY		- / 1		- / 1		SPACE ONLY	42
	SUB TOTAL	6220				4566	SUB TOTAL	

LEGEND:			REMARKS:
	1Ø AMPS	32.8 ØA | 26.6 ØB | 30.3 ØC	
** 6 mA GROUND FAULT CIRCUIT BREAKER	3Ø	10.8 KVA	PROVIDE HANDLE LOCKOFF/PADLOCK ATTACHMENT FOR EACH
* 30 mA GROUND FAULT CIRCUIT BREAKER	3Ø	30.0 AMPS	CB.
# LOCK-ON CIRCUIT BREAKER HANDLE		DEMAND LOAD	
ST - SHUNT TRIP	3Ø	30.0 AMPS	SQUARE D NQ (BASIS OF DESIGN)

PANEL NO. RCP

POWER SUPPLY: 120 VAC
AIC RATING: 22,000
RELAY CONTROL PANEL SCHEDULE | MOUNTING: SURFACE

RELAY NO.	DESCRIPTION	CIRCUIT	FIXTURE TYPE	LOAD VA	TIME CLOCK CONTROL	PHOTOCELL CONTROL
1	LOBBY 100, PREFUNCTION 200, GALLERY 204, CORR 207	L1-1	B1, D1, D2, D3		X	
2	TICKET/INFO 101, CORRIDOR 104, GALLERY 113	L1-3	B1, C2		X	
3	BUILDING OVERHANG, TERRACE	L1-18	D3. D4, G			X
4	SITE SOUTH	L1-2	S1, S2A, S2B			X
5	SITE SOUTH	L1-4	S1, S2A, S2B			X
6	SITE SOUTH	L1-6	S2A, S2B, S3			X
7	SITE NORTH	L1-8	S1, S2B			X
8	SITE NORTH	L1-10	S2B			X
9	SITE NORTH	L1-12	S1, S2B			X
10	BUS BAY CANOPY	L1-14	H			X
11	BUS BAY CANOPY	L1-16	H			X
12	REC - POLICE OFFICE 115	P1-51	(REC)	540	X	
13	REC - POLICE OFFICE 115	P1-53	(REC)	720	X	
14	REC - SERGEANT OFFICE 116	P1-55	(REC)	360	X	
15	REC - COUNTING 102	P1-57	(REC)	360	X	
16	REC - TRANSIT OFFICES 211	P1-59	(REC)	540	X	
17	REC - TRANSIT OFFICES 211	P1-61	(REC)	540	X	
18	REC - TRANSIT MANAGER 212	P1-63	(REC)	360	X	
19	REC - DRIVER TRAINING 208	P1-65	(REC)	720	X	
20						
21						
22						
23						
24						

REMARKS: EMERGENCY LIGHTING FIXTURES CONTROLLED BY A TIME CLOCK WILL DEFAULT TO BATTERY POWER ONLY IF NORMAL POWER IS LOST, AND NOT IF THE FIXTURE IS SIMPLY SWITCHED OFF BY THE TIME CLOCK.

Greenville NORTH CAROLINA

JACOBS

333 Fayetteville Street, Suite 1100
Raleigh, NC 27601
PH: 919-334-3100 FX: 919-334-3122 www.jacobs.com
North Carolina Engineering Firm License No. F-287
North Carolina Architectural Firm Reg. No. 50757

AYERS SAINT GROSS

Consultants:

ARK Consulting Group, PLLC

Coaly Design
Landscape Architecture + Land Planning

Seals:

NORTH CAROLINA PROFESSIONAL SEAL 025693 ENGINEER MARK WILLIS

General Notes:

Project Client:

GREENVILLE TRANSPORTATION ACTIVITY CENTER
600 S. Pitt Street, Greenville, NC

Number	Description	Date
0	IFC	05.10.2016

Key Plan:

Project North

CAD File:

Project No.:

Copyright: 2015 Jacobs Engineering Group

Drawing Sheet Title:

ELECTRICAL PANEL SCHEDULES

Drawing Sheet Number:

E-901

Owner's Drawing Sheet No.:

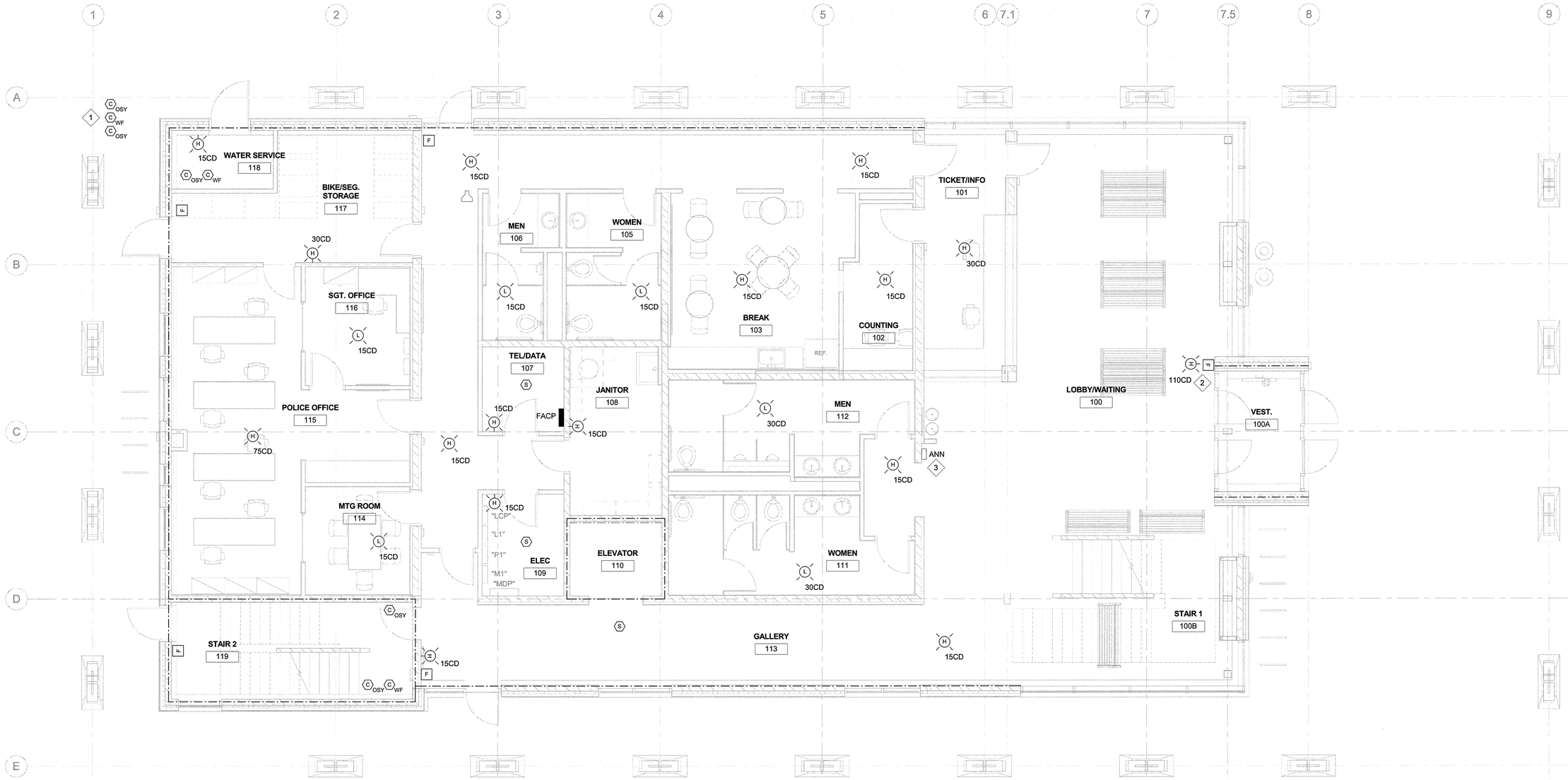

1 FIRE ALARM PLAN LEVEL 1
1/4" = 1'-0"

FIRE ALARM PLAN KEY NOTES:

1. PROVIDE FLOW AND TAMPER SWITCHES AT FIRE MAIN RPDA. REFER TO CIVIL SITE PLAN FOR LOCATION.
2. FEED TO FIRE ALARM DEVICE CONDUIT SHALL BE RUN UNDERSLAB.
3. FIRE ALARM REMOTE ANNUNCIATOR PANEL. COORDINATED FINAL LOCATION WITH ARCHITECT AND LOCAL AHJ.

FIRE ALARM SYMBOLS

F	- MANUAL PULL STATION	DH	- MAGNETIC DOOR HOLDER
S	- CEILING MOUNTED AREA SMOKE DETECTOR	ER	- EMERGENCY RELEASE PUSHBUTTON
S XX	- CEILING MOUNTED AREA SMOKE DETECTOR XX - TEXT FIELD FOR UF(UNDERFLOOR), P(PHOTOELECTRIC) ETC	MM	- ADDREASSABLE INPUT MODULE
D	- AIR HANDLING UNIT DUCT SMOKE DETECTOR	CM	- ADDRESSABLE OUTPUT MODULE
D FS	- DUCT SMOKE DETECTOR ASSOCIATED WITH FIRE/SMOKE DAMPERS	RI	- REMOTE INDICATOR RELATED TO FIRE ALARM DEVICE
C WFPS	- SPRINKLER SYSTEM WATERFLOW PRESSURE SWITCH	PSS	- PREACTION SPRINKLER SYSTEM PANEL / INTERFACE
C LAPS	- SPRINKLER SYSTEM LOW AIR PRESSURE SWITCH	L Y	- CEILING MOUNTED MOUNTED VISUAL INDICATOR Y - TEXT FIELD FOR CANDELA RATING SETTING
C WF	- SPRINKLER SYSTEM WATERFLOW SWITCH	L Y	- WALL MOUNTED MOUNTED VISUAL INDICATOR Y - TEXT FIELD FOR CANDELA RATING SETTING
C OSY	- SPRINKLER SYSTEM VALVE TAMPER SWITCH	H	- CEILING MOUNTED HORN WITH NO VISUAL INDICATOR
C KFP	- KITCHEN FIRE SUPPRESSION SYSTEM MONITORING SWITCH	H Y	- CEILING MOUNTED HORN WITH VISUAL INDICATOR Y - TEXT FIELD FOR CANDELA RATING SETTING
C PIV	- SPRINKLER POST INDICATOR VALVE SWITCH	H	- WALL MOUNTED HORN WITH NO VISUAL INDICATOR
■	- FIRE ALARM OR SECURITY RELATED PANEL	H Y	- WALL MOUNTED SPEAKER WITH VISUAL INDICATOR Y - TEXT FIELD FOR CANDELA RATING SETTING
H	- CEILING MOUNTED AREA HEAT DETECTOR	SD	- SMOKE DAMPER
H XX	- CEILING MOUNTED AREA HEAT DETECTOR XX - TEXT FIELD FOR UF(UNDERFLOOR), SPECIAL TEMPERATURE RATING, ETC		

GENERAL NOTES:

1. ALL PENETRATIONS OF CROSS LAMINATED TIMBER CONSTRUCTION (CLT) SHALL BE CAREFULLY PRE-COORDINATED WITH CLT SUPPLIER. ELECTRICAL CONTRACTOR WILL BE RESPONSIBLE FOR IDENTIFYING, CONFIRMING, AND COORDINATION OF ANY AND ALL CONDUITS AND ASSOCIATED APPURTENANCES WELL IN ADVANCE OF ANY CONSTRUCTION.
2. ANY AND ALL ELEMENTS REQUIRED FOR A COMPLETE AND WORKING SYSTEM NECESSARY FOR ELECTRICAL OPERATION THAT WILL BE WALL-MOUNTED ON THE CLT WILL NEED TO BE COORDINATED IN AREAS WITH A CHASE BEHIND FOR POKE THROUGH PENETRATION OF CLT WALL.

FIRE RATING LEGEND

- 1-HR FIRE RATED WALL LINE
- 2-HR FIRE RATED WALL LINE
- CROSS LAMINATED TIMBER

Greenville
NORTH CAROLINA

JACOBS
333 Fayetteville Street, Suite 1100
Raleigh, NC 27601
PH: 919-334-3100 FX: 919-334-3122 www.jacobs.com
North Carolina Engineering Firm License No. F-287
North Carolina Architectural Firm Reg. No. 50757

AYERS SAINT GROSS

Consultants:
ARK Consulting Group, PLLC
Coaly Design
Landscape Architecture + Land Planning

Seals:

NORTH CAROLINA PROFESSIONAL ENGINEER SEAL 025653 5-9-16 MARK WILLIS

General Notes:

Project Client:
Owner

GREENVILLE TRANSPORTATION ACTIVITY CENTER
600 S. Pitt Street, Greenville, NC

Number	Description	Date
0	IFC	05.10.2016

Key Plan: Project North

CAD File:
Project No.: L3005900
Copyright: 2015 Jacobs Engineering Group

Drawing Sheet Title:
FIRE ALARM PLAN LEVEL 1

Drawing Sheet Number:
FA-101

Owner's Drawing Sheet No.:

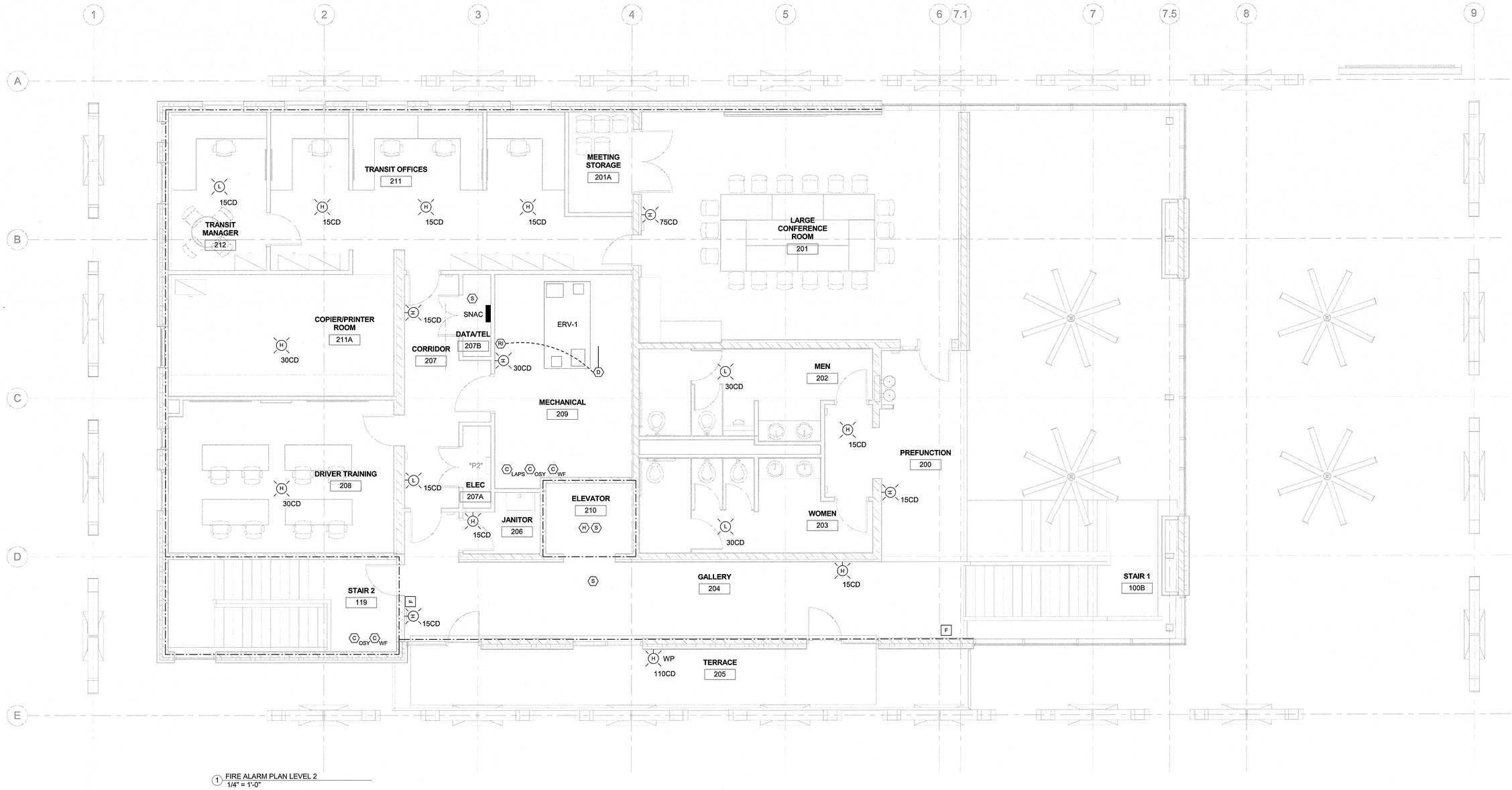

1 FIRE ALARM PLAN LEVEL 2
1/4" = 1'-0"

FIRE ALARM SYMBOLS

F	- MANUAL PULL STATION	DH	- MAGNETIC DOOR HOLDER
S	- CEILING MOUNTED AREA SMOKE DETECTOR	ER	- EMERGENCY RELEASE PUSHBUTTON
S XX	- CEILING MOUNTED AREA SMOKE DETECTOR XX - TEXT FIELD FOR UF(UNDERFLOOR), P(PHOTOELECTRIC) ETC	MM	- ADDREASSABLE INPUT MODULE
D	- AIR HANDLING UNIT DUCT SMOKE DETECTOR	CM	- ADDRESSABLE OUTPUT MODULE
D FS	- DUCT SMOKE DETECTOR ASSOCIATED WITH FIRE/SMOKE DAMPERS	RI	- REMOTE INDICATOR RELATED TO FIRE ALARM DEVICE
C WFPS	- SPRINKLER SYSTEM WATERFLOW PRESSURE SWITCH	PSS	- PREACTION SPRINKLER SYSTEM PANEL / INTERFACE
C LAPS	- SPRINKLER SYSTEM LOW AIR PRESSURE SWITCH	L Y	- CEILING MOUNTED MOUNTED VISUAL INDICATOR Y - TEXT FIELD FOR CANDELA RATING SETTING
C WF	- SPRINKLER SYSTEM WATERFLOW SWITCH	L Y	- WALL MOUNTED MOUNTED VISUAL INDICATOR Y - TEXT FIELD FOR CANDELA RATING SETTING
C OSY	- SPRINKLER SYSTEM VALVE TAMPER SWITCH	H	- CEILING MOUNTED HORN WITH NO VISUAL INDICATOR
C KFP	- KITCHEN FIRE SUPPRESSION SYSTEM MONITORING SWITCH	H Y	- CEILING MOUNTED HORN WITH VISUAL INDICATOR Y - TEXT FIELD FOR CANDELA RATING SETTING
C PIV	- SPRINKLER POST INDICATOR VALVE SWITCH	H	- WALL MOUNTED HORN WITH NO VISUAL INDICATOR
▬	- FIRE ALARM OR SECURITY RELATED PANEL	H Y	- WALL MOUNTED SPEAKER WITH VISUAL INDICATOR Y - TEXT FIELD FOR CANDELA RATING SETTING
H	- CEILING MOUNTED AREA HEAT DETECTOR	SD	- SMOKE DAMPER
H XX	- CEILING MOUNTED AREA HEAT DETECTOR XX - TEXT FIELD FOR UF(UNDERFLOOR), SPECIAL TEMPERATURE RATING, ETC		

GENERAL NOTES:

1. ALL PENETRATIONS OF CROSS LAMINATED TIMBER CONSTRUCTION (CLT) SHALL BE CAREFULLY PRE-COORDINATED WITH CLT SUPPLIER. ELECTRICAL CONTRACTOR WILL BE RESPONSIBLE FOR IDENTIFYING, CONFIRMING, AND COORDINATION OF ANY AND ALL CONDUITS AND ASSOCIATED APPURTENANCES WELL IN ADVANCE OF ANY CONSTRUCTION.
2. ANY AND ALL ELEMENTS REQUIRED FOR A COMPLETE AND WORKING SYSTEM NECESSARY FOR ELECTRICAL OPERATION THAT WILL BE WALL-MOUNTED ON THE CLT WILL NEED TO BE COORDINATED IN AREAS WITH A CHASE BEHIND FOR POKE THROUGH PENETRATION OF CLT WALL.

FIRE RATING LEGEND

1-HR FIRE RATED WALL LINE
2-HR FIRE RATED WALL LINE
CROSS LAMINATED TIMBER

Greenville
NORTH CAROLINA

JACOBS
333 Fayetteville Street, Suite 1100
Raleigh, NC 27601
PH: 919-334-3100 FX: 919-334-3122 www.jacobs.com
North Carolina Engineering Firm License No. F-287
North Carolina Architectural Firm Reg. No. 50757

AYERS SAINT GROSS

Consultants:
ARK Consulting Group, PLLC
Coaly Design
Landscape Architecture + Land Planning

Seals:

NORTH CAROLINA PROFESSIONAL SEAL 025853 ENGINEER MARK WILLIS 5-9-16

General Notes:

Project Client:
Owner

GREENVILLE TRANSPORTATION ACTIVITY CENTER
600 S. Pitt Street, Greenville, NC

Number	Description	Date
0	IFC	05.10.2016

Key Plan:

Project North

CAD File:
Project No.: L3005900
Copyright: 2015 Jacobs Engineering Group

Drawing Sheet Title:
FIRE ALARM PLAN LEVEL 2

Drawing Sheet Number:
FA-102

Owner's Drawing Sheet No.:

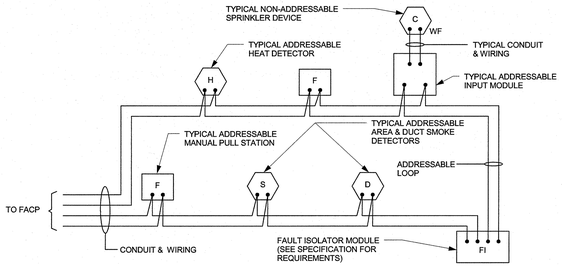

TYPICAL ADDRESSABLE DEVICE WIRING DETAIL
1 NTS

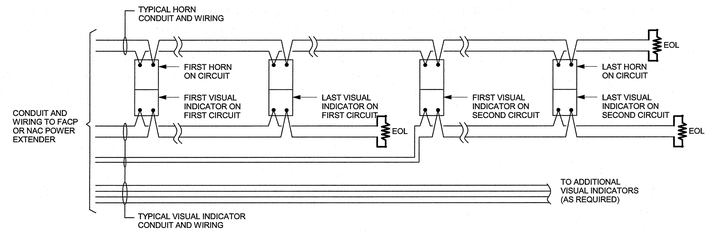

TYPICAL AUDIBLE & VISUAL DEVICE WIRING DETAIL WITH HORNS
2 NTS

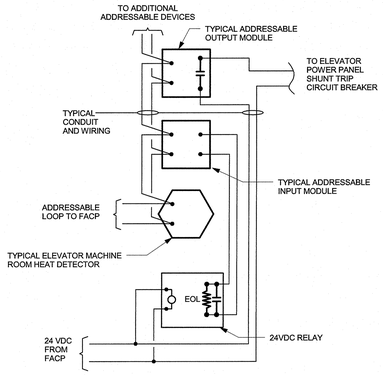

TYPICAL ELEVATOR POWER SHUTDOWN / FIRE ALARM WIRING DETAIL
9 NTS

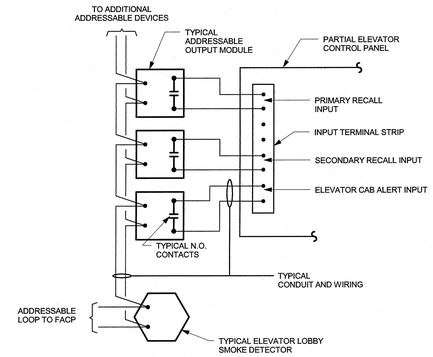

TYPICAL ELEVATOR RECALL INTERFACE DETAIL
10 NTS

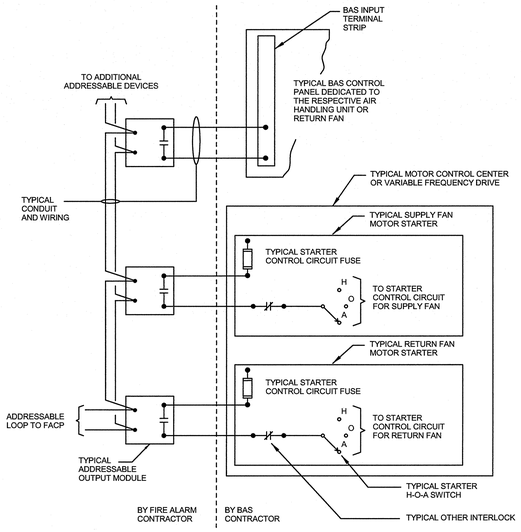

TYPICAL FIRE ALARM / AHU SHUTDOWN CONTROL & BAS INTERFACE WIRING DETAIL
3 NTS

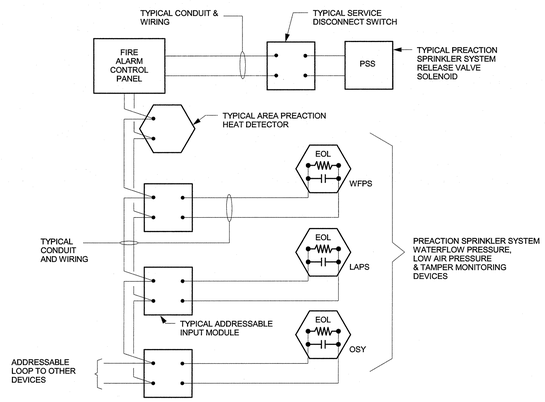

PREACTION SPRINKLER SYSTEM WIRING DETAIL
4 NTS

	CONTROL UNIT ANNUNCIATION								NOTIFICATION						REQ'D FIRE SAFETY CONTROL						SUPPLEMENTARY			
SYSTEM INPUTS / SYSTEM OUTPUTS	ACTIVATE COMMON ALARM SIGNAL INDICATOR	ACTIVATE AUDIBLE ALARM SIGNAL	ACTIVATE COMMON SUPERVISORY SIGNAL INDICATOR	ACTIVATE AUDIBLE SUPERVISORY SIGNAL	ACTIVATE COMMON TROUBLE SIGNAL INDICATOR	ACTIVATE AUDIBLE TROUBLE SIGNAL	ACTIVATE BUILDING FIRE ALARM STROBES	ACTIVATE BUILDING FIA HORNS	TRANSMIT FIA SIGNAL TO SUPERVISING STATION	TRANSMIT SUPERVISORY SIGNAL TO SUPERVISING STATION	TRANSMIT TROUBLE SIGNAL TO SUPERVISING STATION	SHUTDOWN THE AFFECTED AIR HANDLING UNIT (AHU)	UNLOCK EXITS	CLOSE ASSOCIATED SMOKE DAMPERS										
MANUAL PULL STATION	●	●					●	●	●					●										
SMOKE DETECTOR	●	●					●	●	●					●										
DUCT SMOKE DETECTOR			●	●						●			●		●									
THERMAL (HEAT) DETECTOR	●	●					●	●	●					●										
SPRINKLER WATERFLOW	●	●					●	●	●					●										
SPRINKLER TAMPER SWITCH			●	●						●														
FIRE ALARM SYSTEM LOW BATTERY					●	●					●													
FIRE ALARM AC POWER FAILURE					●	●					●													
ALARM SILENCE AT FACP					●	●					●													
DEVICE NO RESPONSE					●	●					●													
SYSTEM OPEN CIRCUIT					●	●					●													
SYSTEM SHORT CIRCUIT					●	●					●													
SYSTEM GROUND FAULT					●	●					●													
DRY PIPE SPRINKLER LOW AIR PRESSURE SWITCH			●	●						●														

FIRE ALARM MATRIX
11 NTS

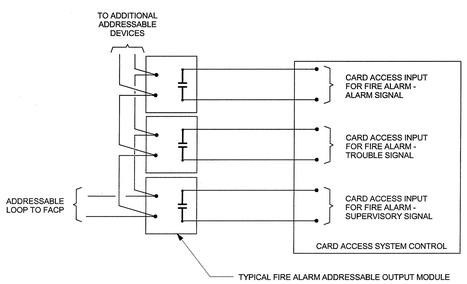

TYPICAL CARD ACCESS / FIRE ALARM INTERFACE DETAIL
5 NTS

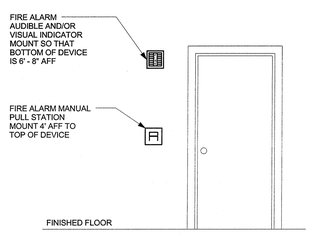

DEVICE LOCATIONS
6 NTS

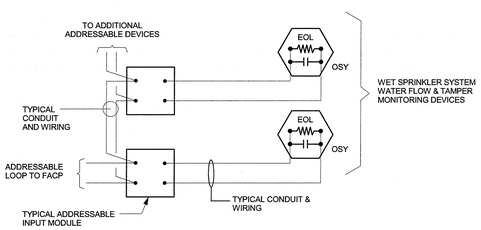

WET SPRINKLER DEVICE WIRING
7 NTS

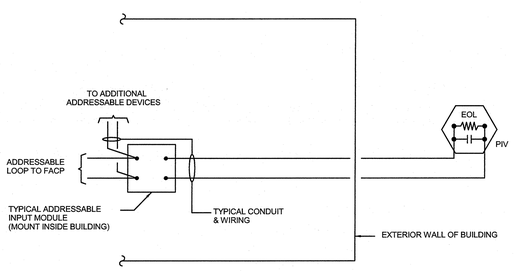

TYPICAL POST INDICATOR VALVE/FIRE ALARM INTERFACE WIRING DETAIL
8 NTS

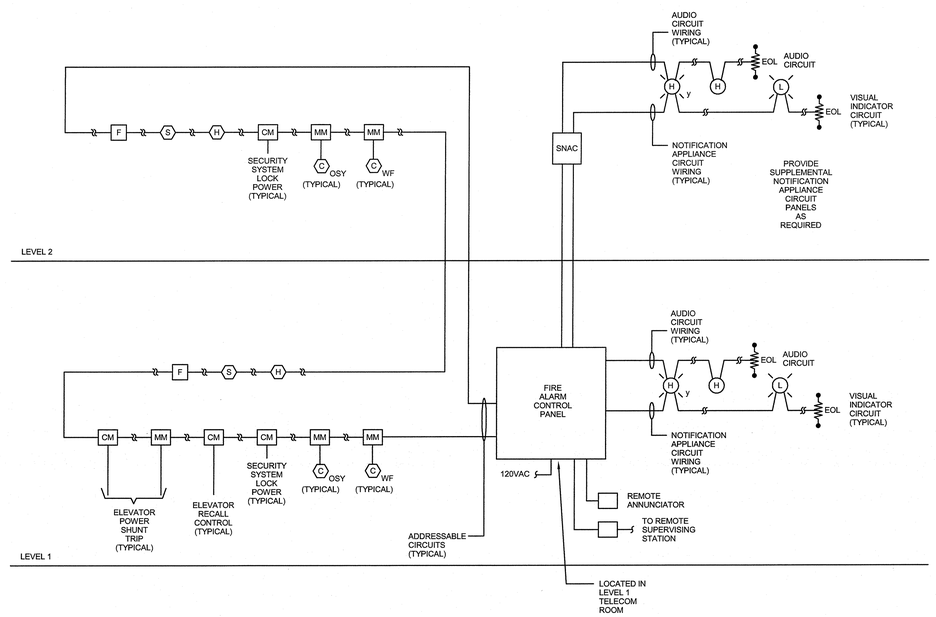

FIRE ALARM RISER DIAGRAM
12 NTS

Greenville NORTH CAROLINA

JACOBS
333 Fayetteville Street, Suite 1100
Raleigh, NC 27601
PH: 919-334-3100 FX: 919-334-3122 www.jacobs.com
North Carolina Engineering Firm License No. F-287
North Carolina Architectural Firm Reg. No. 50757

AYERS SAINT GROSS

Consultants:
ARK Consulting Group, PLLC
Coaly Design
Landscape Architecture + Land Planning

Seals:

NORTH CAROLINA PROFESSIONAL ENGINEER SEAL 025862 MARK WILLIS

General Notes:

Project Client:
Owner

GREENVILLE TRANSPORTATION ACTIVITY CENTER
600 S. Pitt Street, Greenville, NC

Number	Description	Date
0	IFC	05.10.2016

Key Plan: Project North

CAD File:
Project No.: L3005900
Copyright: 2015 Jacobs Engineering Group

Drawing Sheet Title:
FIRE ALARM MATRIX, RISER & DETAILS

Drawing Sheet Number:
FA-601

Owner's Drawing Sheet No.:

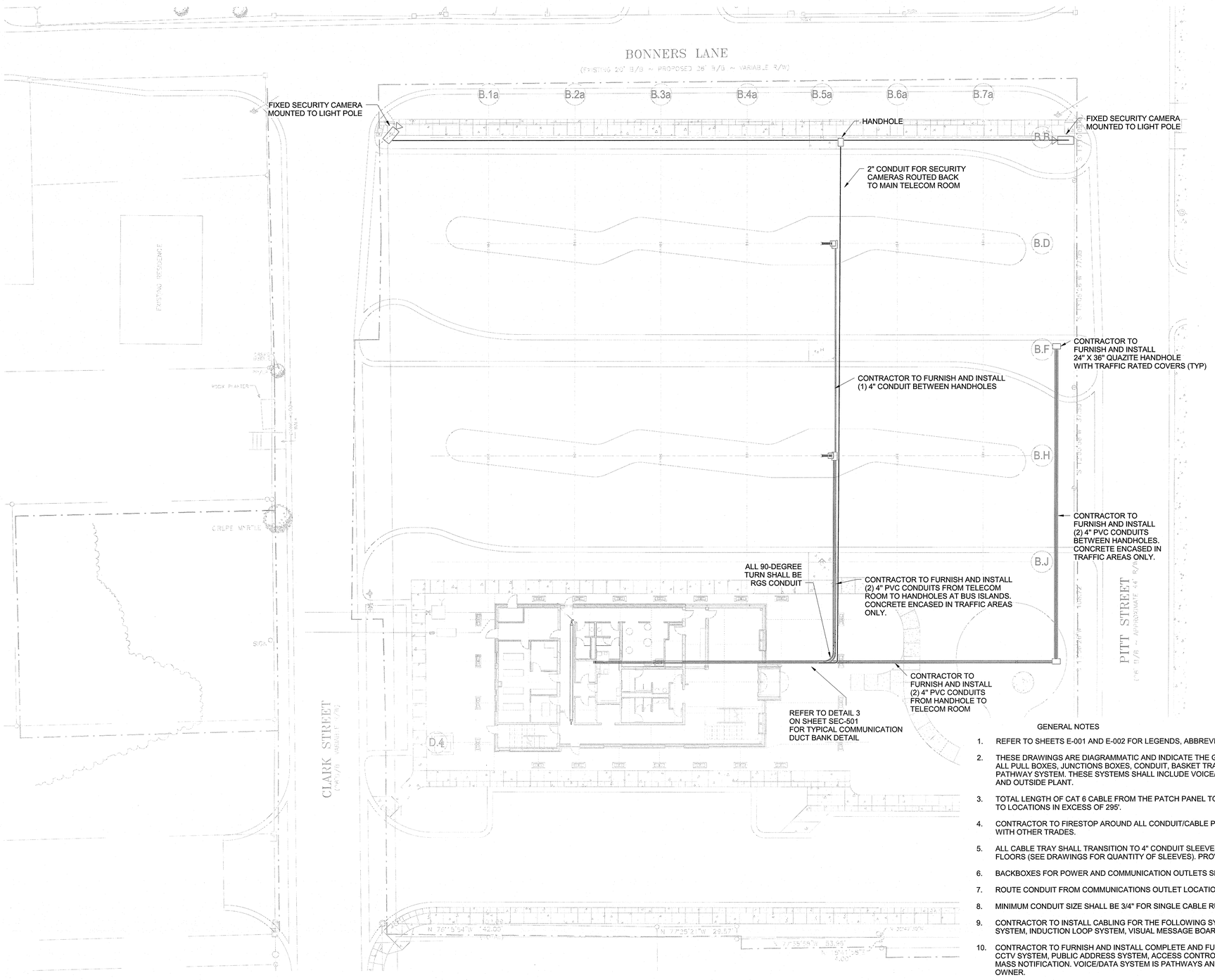

1 - SYSTEMS OVERALL PLAN
1/16" = 1'-0"

GENERAL NOTES

1. REFER TO SHEETS E-001 AND E-002 FOR LEGENDS, ABBREVIATIONS, AND NOTES.
2. THESE DRAWINGS ARE DIAGRAMMATIC AND INDICATE THE GENERAL EXTENT OF THE WORK. THE ELECTRICAL CONTRACTORS SHALL PROVIDE ALL PULL BOXES, JUNCTIONS BOXES, CONDUIT, BASKET TRAY, AND INCIDENTAL MATERIALS AND LABOR FOR A COMPLETE FULLY FUNCTIONAL PATHWAY SYSTEM. THESE SYSTEMS SHALL INCLUDE VOICE/DATA, WIRELESS ACCESS POINTS, CCTV, ACCESS CONTROL, INDUCTION LOOP, VMB AND OUTSIDE PLANT.
3. TOTAL LENGTH OF CAT 6 CABLE FROM THE PATCH PANEL TO THE FARTHEST OUTLET SHALL BE NO LONGER THAN 295'. PROVIDE OPTICAL FIBER TO LOCATIONS IN EXCESS OF 295'.
4. CONTRACTOR TO FIRESTOP AROUND ALL CONDUIT/CABLE PENETRATIONS THROUGH SMOKE AND FIRE RATED WALLS. COORDINATE PATHWAYS WITH OTHER TRADES.
5. ALL CABLE TRAY SHALL TRANSITION TO 4" CONDUIT SLEEVES WITH PROTECTIVE BUSHINGS FOR PENETRATION OF FIRE RATED WALLS AND FLOORS (SEE DRAWINGS FOR QUANTITY OF SLEEVES). PROVIDE FIRESTOPPING INSIDE CONDUIT AFTER INSTALLATION OF ALL CABLES.
6. BACKBOXES FOR POWER AND COMMUNICATION OUTLETS SHALL NOT BE MOUNTED BACK TO BACK.
7. ROUTE CONDUIT FROM COMMUNICATIONS OUTLET LOCATIONS, PUBLIC ADDRESS, ETC. TO NEAREST CABLE TRAY.
8. MINIMUM CONDUIT SIZE SHALL BE 3/4" FOR SINGLE CABLE RUNS. MINIMUM CONDUIT SIZE FOR VOICE/DATA CABLE SHALL BE 1".
9. CONTRACTOR TO INSTALL CABLING FOR THE FOLLOWING SYSTEMS: TCP/IP POE CCTV SYSTEM, PUBLIC ADDRESS SYSTEM, ACCESS CONTROL SYSTEM, INDUCTION LOOP SYSTEM, VISUAL MESSAGE BOARDS, CATV SYSTEM AND VOICE/DATA (INCLUDING WAP LOCATIONS).
10. CONTRACTOR TO FURNISH AND INSTALL COMPLETE AND FULLY OPERATIONAL SYSTEMS (INCLUDING ELECTRONICS) AS FOLLOWS: TCP/IP POE CCTV SYSTEM, PUBLIC ADDRESS SYSTEM, ACCESS CONTROL SYSTEM, VISUAL MESSAGE BOARDS, INDUCTION LOOP HEARING SYSTEM AND MASS NOTIFICATION. VOICE/DATA SYSTEM IS PATHWAYS AND CABLING ONLY. CONTRACTOR TO COORDINATE SYSTEMS INTEGRATION WITH OWNER.
11. CONTRACTOR SHALL FURNISH AND INSTALL EQUIPMENT RACKS WITH VERTICAL AND HORIZONTAL WIRE MANAGERS AS SHOWN ON DRAWINGS.
12. CONTRACTOR SHALL COORDINATE ABOVE SYSTEMS INSTALLATION WITH ALL OTHER TRADES AND SYSTEM OWNER.
13. TERMINATE AND TEST ALL CABLING AND SYSTEMS INSTALLED IN ACCORDANCE WITH SPECIFICATIONS
14. ALL SYSTEMS SHALL BE GROUNDED IN ACCORDANCE WITH TIA-607-B, NFPA 70 AND SITE SPECIFICATIONS.
15. ALL 90-DEGREE CONDUIT TURNS SHALL BE RGS CONDUIT.
16. CONTRACTOR TO FURNISH AND INSTALL (4) AVAYA IP 1140E TELEPHONES, (4) AVAYA 1120E TELEPHONES AND (2) AVAYA 2033 CONFERENCE TELEPHONES. COORDINATE INSALLATION AND FINAL LOCATION WITH SYSTEM OWNER.

Greenville
NORTH CAROLINA

JACOBS
333 Fayetteville Street, Suite 1100
Raleigh, NC 27601
PH: 919-334-3100 FX: 919-334-3122 www.jacobs.com
North Carolina Engineering Firm License No. F-287
North Carolina Architectural Firm Reg. No. 50757

AYERS SAINT GROSS

Consultants:
ARK Consulting Group, PLLC
Coaly Design
Landscape Architecture + Land Planning

Seals:

NORTH CAROLINA PROFESSIONAL ENGINEER SEAL 025853 5-9-16 MARK WILLIS

General Notes:

Project Client:
Owner

GREENVILLE TRANSPORTATION ACTIVITY CENTER
600 S. Pitt Street, Greenville, NC

Number	Description	Date
0	IFC	05.10.2016

Key Plan:

Project North

CAD File:

Project No.: L3005900

Copyright: 2015 Jacobs Engineering Group

Drawing Sheet Title:
SYSTEMS OVERALL PLAN

Drawing Sheet Number:
SEC-101

Owner's Drawing Sheet No.:

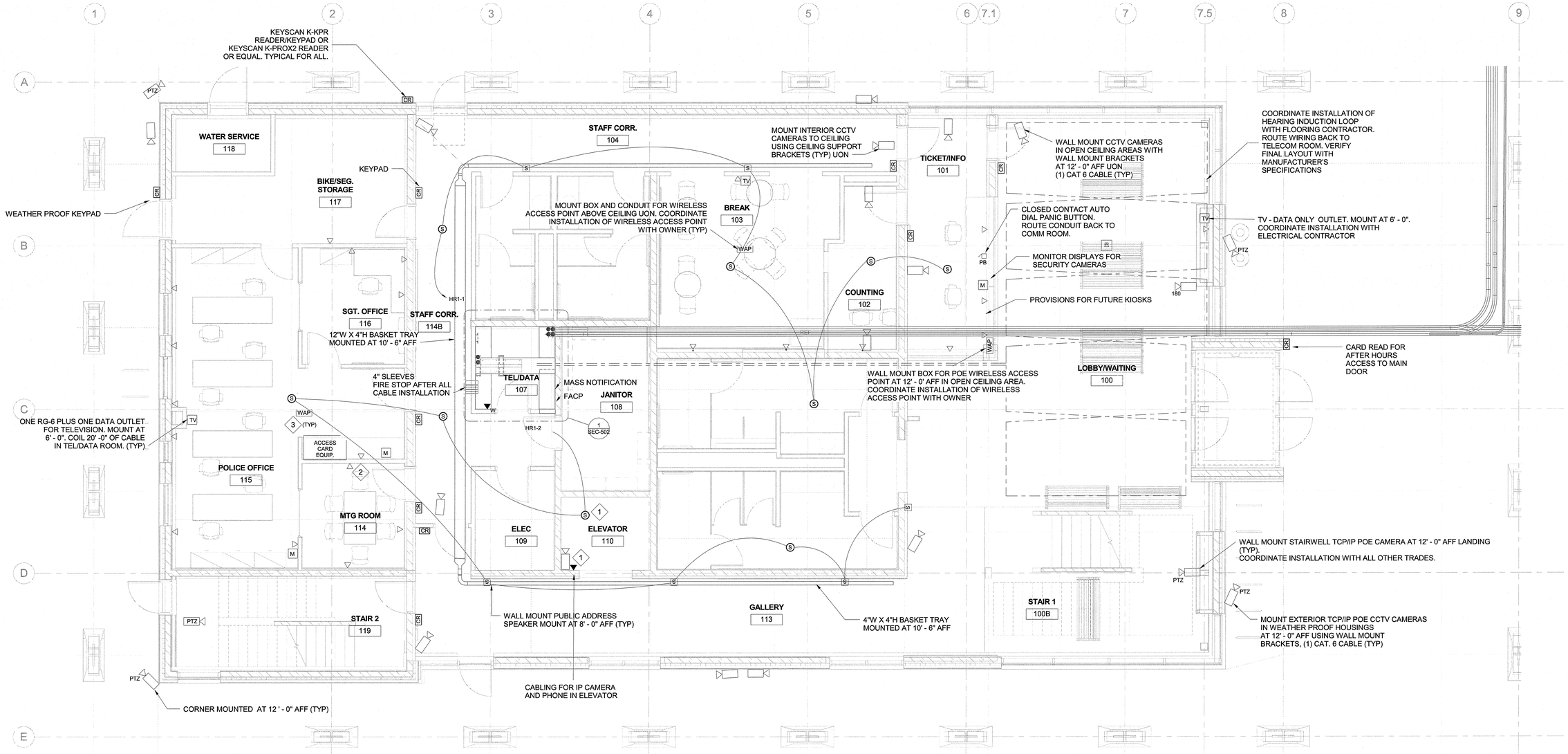

1 SYSTEMS FLOOR PLAN LEVEL 1
1/4" = 1'-0"

KEYED NOTES:

1. COORDINATE INSTALLATION WITH ELEVATOR CONTRACTOR.
2. CONTRACTOR SHALL INSTALL (5) CAT-6 CABLES TO EACH LOCATION AS INDICATED. REFER TO SHEET SEC-501 DETAIL 4 FOR LABEL AND COLOR CODE STANDARDS.
3. CONTRACTOR SHALL FURNISH AND INSTALL RUCKUS ZONEFLEX MODEL #R710 WIRELESS ACCESS POINTS IN LOCATIONS SHOWN ON DRAWING.

GENERAL NOTES

1. REFER TO SHEETS E-001 AND E-002 FOR LEGENDS, ABBREVIATIONS, AND NOTES.
2. THESE DRAWINGS ARE DIAGRAMMATIC AND INDICATE THE GENERAL EXTENT OF THE WORK. THE ELECTRICAL CONTRACTORS SHALL PROVIDE ALL PULL BOXES, JUNCTIONS BOXES, CONDUIT, BASKET TRAY, AND INCIDENTAL MATERIALS AND LABOR FOR A COMPLETE FULLY FUNCTIONAL PATHWAY SYSTEM. THESE SYSTEMS SHALL INCLUDE VOICE/DATA, WIRELESS ACCESS POINTS, CCTV, ACCESS CONTROL, INDUCTION LOOP, VMB AND OUTSIDE PLANT.
3. TOTAL LENGTH OF CAT 6 CABLE FROM THE PATCH PANEL TO THE FARTHEST OUTLET SHALL BE NO LONGER THAN 295'. PROVIDE OPTICAL FIBER TO LOCATIONS IN EXCESS OF 295'.
4. CONTRACTOR TO FIRESTOP AROUND ALL CONDUIT/CABLE PENETRATIONS THROUGH SMOKE AND FIRE RATED WALLS. COORDINATE PATHWAYS WITH OTHER TRADES.
5. ALL CABLE TRAY SHALL TRANSITION TO 4" CONDUIT SLEEVES WITH PROTECTIVE BUSHINGS FOR PENETRATION OF FIRE RATED WALLS AND FLOORS (SEE DRAWINGS FOR QUANTITY OF SLEEVES). PROVIDE FIRESTOPPING INSIDE CONDUIT AFTER INSTALLATION OF ALL CABLES.
6. BACKBOXES FOR POWER AND COMMUNICATION OUTLETS SHALL NOT BE MOUNTED BACK TO BACK.
7. ROUTE CONDUIT FROM COMMUNICATIONS OUTLET LOCATIONS, PUBLIC ADDRESS, ETC. TO NEAREST CABLE TRAY.
8. MINIMUM CONDUIT SIZE SHALL BE 3/4" FOR SINGLE CABLE RUNS. MINIMUM CONDUIT SIZE FOR VOICE/DATA CABLE SHALL BE 1".
9. CONTRACTOR TO INSTALL CABLING FOR THE FOLLOWING SYSTEMS: TCP/IP POE CCTV SYSTEM, PUBLIC ADDRESS SYSTEM, ACCESS CONTROL SYSTEM, INDUCTION LOOP SYSTEM, VISUAL MESSAGE BOARDS, CATV SYSTEM AND VOICE/DATA (INCLUDING WAP LOCATIONS).
10. CONTRACTOR TO FURNISH AND INSTALL COMPLETE AND FULLY OPERATIONAL SYSTEMS (INCLUDING ELECTRONICS) AS FOLLOWS: TCP/IP POE CCTV SYSTEM, PUBLIC ADDRESS SYSTEM, ACCESS CONTROL SYSTEM, VISUAL MESSAGE BOARDS, INDUCTION LOOP HEARING SYSTEM AND MASS NOTIFICATION. VOICE/DATA SYSTEM IS PATHWAYS AND CABLING ONLY. CONTRACTOR TO COORDINATE SYSTEMS INTEGRATION WITH OWNER.
11. CONTRACTOR SHALL FURNISH AND INSTALL EQUIPMENT RACKS WITH VERTICAL AND HORIZONTAL WIRE MANAGERS AS SHOWN ON DRAWINGS.
12. CONTRACTOR SHALL COORDINATE ABOVE SYSTEMS INSTALLATION WITH ALL OTHER TRADES AND SYSTEM OWNER.
13. TERMINATE AND TEST ALL CABLING AND SYSTEMS INSTALLED IN ACCORDANCE WITH SPECIFICATIONS
14. ALL SYSTEMS SHALL BE GROUNDED IN ACCORDANCE WITH TIA-607-B, NFPA 70 AND SITE SPECIFICATIONS.
15. ALL 90-DEGREE CONDUIT TURNS SHALL BE RGS CONDUIT.
16. CONTRACTOR TO FURNISH AND INSTALL (4) AVAYA IP 1140E TELEPHONES, (4) AVAYA 1120E TELEPHONES AND (2) AVAYA 2033 CONFERENCE TELEPHONES. COORDINATE INSALLATION AND FINAL LOCATION WITH SYSTEM OWNER.

FIRE RATING LEGEND

- 1-HR FIRE RATED WALL LINE
- 2-HR FIRE RATED WALL LINE
- CROSS LAMINATED TIMBER

Greenville NORTH CAROLINA

JACOBS
333 Fayetteville Street, Suite 1100
Raleigh, NC 27601
PH: 919-334-3100 FX: 919-334-3122 www.jacobs.com
North Carolina Engineering Firm License No. F-287
North Carolina Architectural Firm Reg. No. 50757

AYERS SAINT GROSS

Consultants:
ARK Consulting Group, PLLC
Coaly Design
Landscape Architecture + Land Planning

Seals:

NORTH CAROLINA PROFESSIONAL ENGINEER SEAL 025663 5-9-16 MARK WILLIS

General Notes:

Project Client:
Owner

GREENVILLE TRANSPORTATION ACTIVITY CENTER
600 S. Pitt Street, Greenville, NC

Number	Description	Date
0	IFC	05.10.2016

Key Plan:

Project North

CAD File:
Project No.: IL3005900
Copyright: 2015 Jacobs Engineering Group

Drawing Sheet Title:
SYSTEMS FLOOR PLAN LEVEL 1

Drawing Sheet Number:
SEC-102

Owner's Drawing Sheet No.:

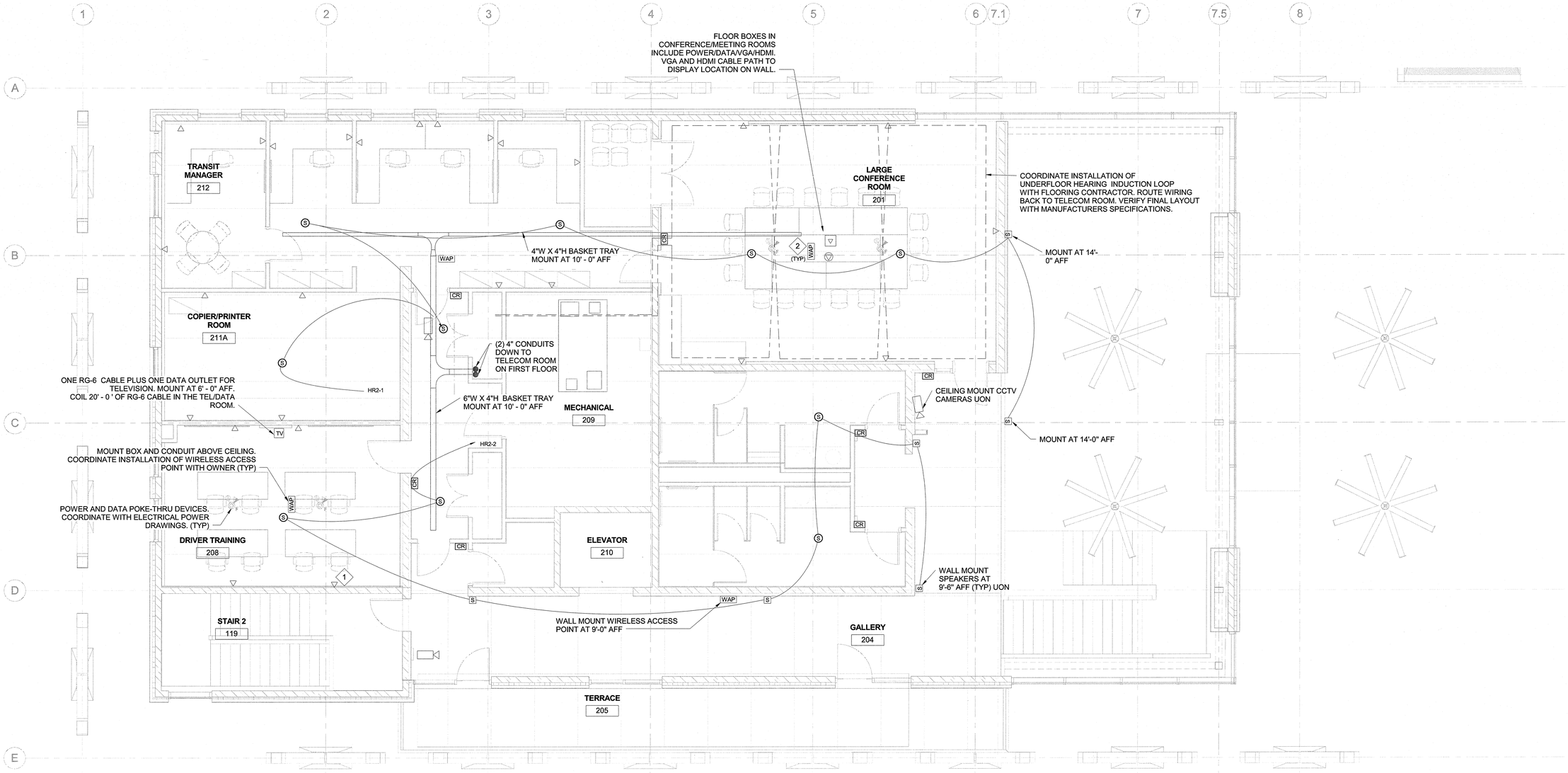

1 SYSTEMS FLOOR PLAN LEVEL 2
1/4" = 1'-0"

KEYED NOTES:

1. CONTRACTOR SHALL INSTALL (5) CAT-6 CABLES TO EACH LOCATION AS INDICATED. REFER TO SHEET SEC-501 DETAIL 4 FOR LABEL AND COLOR CODE STANDARDS.
2. CONTRACTOR SHALL FURNISH AND INSTALL RUCKUS ZONEFLEX MODEL #R710 WIRELESS ACCESS POINTS IN LOCATIONS SHOWN ON DRAWING.

GENERAL NOTES

1. REFER TO SHEETS E-001 AND E-002 FOR LEGENDS, ABBREVIATIONS, AND NOTES.
2. THESE DRAWINGS ARE DIAGRAMMATIC AND INDICATE THE GENERAL EXTENT OF THE WORK. THE ELECTRICAL CONTRACTORS SHALL PROVIDE ALL PULL BOXES, JUNCTIONS BOXES, CONDUIT, BASKET TRAY, AND INCIDENTAL MATERIALS AND LABOR FOR A COMPLETE FULLY FUNCTIONAL PATHWAY SYSTEM. THESE SYSTEMS SHALL INCLUDE VOICE/DATA, WIRELESS ACCESS POINTS, CCTV, ACCESS CONTROL, INDUCTION LOOP, VMB AND OUTSIDE PLANT.
3. TOTAL LENGTH OF CAT 6 CABLE FROM THE PATCH PANEL TO THE FARTHEST OUTLET SHALL BE NO LONGER THAN 295'. PROVIDE OPTICAL FIBER TO LOCATIONS IN EXCESS OF 295'.
4. CONTRACTOR TO FIRESTOP AROUND ALL CONDUIT/CABLE PENETRATIONS THROUGH SMOKE AND FIRE RATED WALLS. COORDINATE PATHWAYS WITH OTHER TRADES.
5. ALL CABLE TRAY SHALL TRANSITION TO 4" CONDUIT SLEEVES WITH PROTECTIVE BUSHINGS FOR PENETRATION OF FIRE RATED WALLS AND FLOORS (SEE DRAWINGS FOR QUANTITY OF SLEEVES). PROVIDE FIRESTOPPING INSIDE CONDUIT AFTER INSTALLATION OF ALL CABLES.
6. BACKBOXES FOR POWER AND COMMUNICATION OUTLETS SHALL NOT BE MOUNTED BACK TO BACK.
7. ROUTE CONDUIT FROM COMMUNICATIONS OUTLET LOCATIONS, PUBLIC ADDRESS, ETC. TO NEAREST CABLE TRAY.
8. MINIMUM CONDUIT SIZE SHALL BE 3/4" FOR SINGLE CABLE RUNS. MINIMUM CONDUIT SIZE FOR VOICE/DATA CABLE SHALL BE 1".
9. CONTRACTOR TO INSTALL CABLING FOR THE FOLLOWING SYSTEMS: TCP/IP POE CCTV SYSTEM, PUBLIC ADDRESS SYSTEM, ACCESS CONTROL SYSTEM, INDUCTION LOOP SYSTEM, VISUAL MESSAGE BOARDS, CATV SYSTEM AND VOICE/DATA (INCLUDING WAP LOCATIONS).
10. CONTRACTOR TO FURNISH AND INSTALL COMPLETE AND FULLY OPERATIONAL SYSTEMS (INCLUDING ELECTRONICS) AS FOLLOWS: TCP/IP POE CCTV SYSTEM, PUBLIC ADDRESS SYSTEM, ACCESS CONTROL SYSTEM, VISUAL MESSAGE BOARDS, INDUCTION LOOP HEARING SYSTEM AND MASS NOTIFICATION. VOICE/DATA SYSTEM IS PATHWAYS AND CABLING ONLY. CONTRACTOR TO COORDINATE SYSTEMS INTEGRATION WITH OWNER.
11. CONTRACTOR SHALL FURNISH AND INSTALL EQUIPMENT RACKS WITH VERTICAL AND HORIZONTAL WIRE MANAGERS AS SHOWN ON DRAWINGS.
12. CONTRACTOR SHALL COORDINATE ABOVE SYSTEMS INSTALLATION WITH ALL OTHER TRADES AND SYSTEM OWNER.
13. TERMINATE AND TEST ALL CABLING AND SYSTEMS INSTALLED IN ACCORDANCE WITH SPECIFICATIONS
14. ALL SYSTEMS SHALL BE GROUNDED IN ACCORDANCE WITH TIA-607-B, NFPA 70 AND SITE SPECIFICATIONS.
15. ALL 90-DEGREE CONDUIT TURNS SHALL BE RGS CONDUIT.
16. CONTRACTOR TO FURNISH AND INSTALL (4) AVAYA IP 1140E TELEPHONES, (4) AVAYA 1120E TELEPHONES AND (2) AVAYA 2033 CONFERENCE TELEPHONES. COORDINATE INSALLATION AND FINAL LOCATION WITH SYSTEM OWNER.

FIRE RATING LEGEND

1-HR FIRE RATED WALL LINE
2-HR FIRE RATED WALL LINE
CROSS LAMINATED TIMBER

Greenville
NORTH CAROLINA

JACOBS
333 Fayetteville Street, Suite 1100
Raleigh, NC 27601
PH: 919-334-3100 FX: 919-334-3122 www.jacobs.com
North Carolina Engineering Firm License No. F-287
North Carolina Architectural Firm Reg. No. 50757

AYERS SAINT GROSS

Consultants:
ARK Consulting Group, PLLC
Coaly Design
Landscape Architecture + Land Planning

Seals:

NORTH CAROLINA PROFESSIONAL 026865 5-1-16 ENGINEER MARK WILLIS

General Notes:

Project Client:
Owner

GREENVILLE TRANSPORTATION ACTIVITY CENTER
600 S. Pitt Street, Greenville, NC

Number	Description	Date
0	IFC	05.10.2016

Key Plan:

Project North

CAD File:
Project No.: L3005900
Copyright: 2015 Jacobs Engineering Group

Drawing Sheet Title:
SYSTEMS FLOOR PLAN LEVEL 2

Drawing Sheet Number:
SEC-103

Owner's Drawing Sheet No.:

NOTE:
1. CONDUITS, FITTINGS, BOXES AND ALL APURTENANCES INSTALLED ON BUS ISLANDS SHALL BE WEATHER PROOF.
2. WEATHER PROOF PUBLIC ADDRESS HORNS MUST FACE IN THE DIRECTIONS SHOWN ON THE DRAWING.
3. ALL CABLING FOR THE BUS ISLANDS SHALL BE RATED FOR INDOOR/OUTDOOR USE.

1 SYSTEMS FLOOR PLAN STATION
1/8" = 1'-0"

KEYED NOTES:

1. CONTRACTOR SHALL INSTALL (5) CAT-6 CABLES TO EACH LOCATION AS INDICATED. REFER TO SHEET SEC-501 DETAIL 4 FOR LABEL AND COLOR CODE STANDARDS.

2. CONTRACTOR SHALL FURNISH AND INSTALL RUCKUS ZONEFLEX MODEL T301 WIRELESS ACCESS POINT AND ALL ITEMS TO MAKE THEM OPERATIONAL. MOUNT WAPS IN LOCATIONS SHOWN ON DRAWING.

GENERAL NOTES

1. REFER TO SHEETS E-001 AND E-002 FOR LEGENDS, ABBREVIATIONS, AND NOTES.
2. THESE DRAWINGS ARE DIAGRAMMATIC AND INDICATE THE GENERAL EXTENT OF THE WORK. THE ELECTRICAL CONTRACTORS SHALL PROVIDE ALL PULL BOXES, JUNCTIONS BOXES, CONDUIT, BASKET TRAY, AND INCIDENTAL MATERIALS AND LABOR FOR A COMPLETE FULLY FUNCTIONAL PATHWAY SYSTEM. THESE SYSTEMS SHALL INCLUDE VOICE/DATA, WIRELESS ACCESS POINTS, CCTV, ACCESS CONTROL, INDUCTION LOOP, VMB AND OUTSIDE PLANT.
3. TOTAL LENGTH OF CAT 6 CABLE FROM THE PATCH PANEL TO THE FARTHEST OUTLET SHALL BE NO LONGER THAN 295'. PROVIDE OPTICAL FIBER TO LOCATIONS IN EXCESS OF 295'.
4. CONTRACTOR TO FIRESTOP AROUND ALL CONDUIT/CABLE PENETRATIONS THROUGH SMOKE AND FIRE RATED WALLS. COORDINATE PATHWAYS WITH OTHER TRADES.
5. ALL CABLE TRAY SHALL TRANSITION TO 4" CONDUIT SLEEVES WITH PROTECTIVE BUSHINGS FOR PENETRATION OF FIRE RATED WALLS AND FLOORS (SEE DRAWINGS FOR QUANTITY OF SLEEVES). PROVIDE FIRESTOPPING INSIDE CONDUIT AFTER INSTALLATION OF ALL CABLES.
6. BACKBOXES FOR POWER AND COMMUNICATION OUTLETS SHALL NOT BE MOUNTED BACK TO BACK.
7. ROUTE CONDUIT FROM COMMUNICATIONS OUTLET LOCATIONS, PUBLIC ADDRESS, ETC. TO NEAREST CABLE TRAY.
8. MINIMUM CONDUIT SIZE SHALL BE 3/4" FOR SINGLE CABLE RUNS. MINIMUM CONDUIT SIZE FOR VOICE/DATA CABLE SHALL BE 1".
9. CONTRACTOR TO INSTALL CABLING FOR THE FOLLOWING SYSTEMS: TCP/IP POE CCTV SYSTEM, PUBLIC ADDRESS SYSTEM, ACCESS CONTROL SYSTEM, INDUCTION LOOP SYSTEM, VISUAL MESSAGE BOARDS, CATV SYSTEM AND VOICE/DATA (INCLUDING WAP LOCATIONS).
10. CONTRACTOR TO FURNISH AND INSTALL COMPLETE AND FULLY OPERATIONAL SYSTEMS (INCLUDING ELECTRONICS) AS FOLLOWS: TCP/IP POE CCTV SYSTEM, PUBLIC ADDRESS SYSTEM, ACCESS CONTROL SYSTEM, VISUAL MESSAGE BOARDS, INDUCTION LOOP HEARING SYSTEM AND MASS NOTIFICATION. VOICE/DATA SYSTEM IS PATHWAYS AND CABLING ONLY. CONTRACTOR TO COORDINATE SYSTEMS INTEGRATION WITH OWNER.
11. CONTRACTOR SHALL FURNISH AND INSTALL EQUIPMENT RACKS WITH VERTICAL AND HORIZONTAL WIRE MANAGERS AS SHOWN ON DRAWINGS.
12. CONTRACTOR SHALL COORDINATE ABOVE SYSTEMS INSTALLATION WITH ALL OTHER TRADES AND SYSTEM OWNER.
13. TERMINATE AND TEST ALL CABLING AND SYSTEMS INSTALLED IN ACCORDANCE WITH SPECIFICATIONS
14. ALL SYSTEMS SHALL BE GROUNDED IN ACCORDANCE WITH TIA-607-B, NFPA 70 AND SITE SPECIFICATIONS.
15. ALL 90-DEGREE CONDUIT TURNS SHALL BE RGS CONDUIT.
16. CONTRACTOR TO FURNISH AND INSTALL (4) AVAYA IP 1140E TELEPHONES, (4) AVAYA 1120E TELEPHONES AND (2) AVAYA 2033 CONFERENCE TELEPHONES. COORDINATE INSALLATION AND FINAL LOCATION WITH SYSTEM OWNER.

Greenville
NORTH CAROLINA

JACOBS
333 Fayetteville Street, Suite 1100
Raleigh, NC 27601
PH: 919-334-3100 FX: 919-334-3122 www.jacobs.com
North Carolina Engineering Firm License No. F-287
North Carolina Architectural Firm Reg. No. 50757

AYERS SAINT GROSS

Consultants:
ARK Consulting Group, PLLC

Coaly Design
Landscape Architecture + Land Planning

Seals:

NORTH CAROLINA PROFESSIONAL ENGINEER SEAL 025653 5-9-16 ENGINEER MARK WILLIS

General Notes:

Project Client:
Owner

GREENVILLE TRANSPORTATION ACTIVITY CENTER
600 S. Pitt Street, Greenville, NC

Number	Description	Date
0	IFC	05.10.2016

Key Plan:

Project North

CAD File:
Project No.: L3005900
Copyright: 2015 Jacobs Engineering Group

Drawing Sheet Title:
SYSTEMS FLOOR PLAN STATION

Drawing Sheet Number:
SEC-104

Owner's Drawing Sheet No.:

DATA ROOM	RACK NUMBER	PATCH PANEL	PORT NUMBER	ROOM	APPLICATION TYPE	CABLE COLOR	CABLE LENGTH	POE	REMARKS
CLOSET	1	FIB A	1	NORTH ISLAND	CCTV			X	FIXED CAMERA
CLOSET	1	FIB A	2	NORTH ISLAND	CCTV			X	FIXED CAMERA
CLOSET	1	FIB A	3	NORTH ISLAND	CCTV			X	FIXED CAMERA
CLOSET	1	FIB A	4	NORTH ISLAND	CCTV			X	FIXED CAMERA
CLOSET	1	FIB A	5	NORTH ISLAND	CCTV			X	FIXED CAMERA
CLOSET	1	FIB A	6	NORTH ISLAND	CCTV			X	FIXED CAMERA
CLOSET	1	FIB A	7	SOUTH ISLAND	CCTV			X	FIXED CAMERA
CLOSET	1	FIB A	8	SOUTH ISLAND	CCTV			X	FIXED CAMERA
CLOSET	1	FIB A	9	SOUTH ISLAND	CCTV			X	FIXED CAMERA
CLOSET	1	FIB A	10	SOUTH ISLAND	CCTV			X	FIXED CAMERA
CLOSET	1	FIB A	11	SOUTH ISLAND	CCTV			X	FIXED CAMERA
CLOSET	1	FIB A	12	SOUTH ISLAND	CCTV			X	FIXED CAMERA
CLOSET	1	A	1	EXTERIOR NW CORNER	CCTV			X	PTZ CAMERA
CLOSET	1	A	2	EXTERIOR NW CORNER	CCTV			X	FIXED CAMERA
CLOSET	1	A	3	119 STAIRWELL	CCTV			X	PTZ CAMERA
CLOSET	1	A	4	EXTERIOR SE WALL	CCTV			X	PTZ CAMERA
CLOSET	1	A	5	100/113 CORNER	CCTV			X	FIXED CAMERA
CLOSET	1	A	6	EXTERIOR NE WALL	CCTV			X	PTZ CAMERA
CLOSET	1	A	7	EXTERIOR SOUTH WALL #1	CCTV			X	FIXED CAMERA
CLOSET	1	A	8	104/114B CORRIDOR	CCTV			X	FIXED CAMERA
CLOSET	1	A	9	104 CORRIDOR	CCTV			X	FIXED CAMERA
CLOSET	1	A	10	100 DOOR AT TICKET INFO	CCTV			X	FIXED CAMERA
CLOSET	1	A	11	114B CORRIDOR	CCTV			X	FIXED CAMERA
CLOSET	1	A	12	113 GALLERY	CCTV			X	FIXED CAMERA
CLOSET	1	A	13	100B STAIRWELL	CCTV			X	PTZ CAMERA
CLOSET	1	A	14	100	CCTV			X	180 DEGREE CAMERA
CLOSET	1	A	15	201 CORRIDOR	CCTV			X	FIXED CAMERA
CLOSET	1	A	16	204 CORRIDOR	CCTV			X	FIXED CAMERA
CLOSET	1	A	17	210 CORRIDOR	CCTV			X	FIXED CAMERA
CLOSET	1	A	18	EXTERIOR SW CORNER	CCTV			X	PTZ CAMERA
CLOSET	1	A	19	101 TICKET INFO	CCTV			X	FIXED CAMERA
CLOSET	1	A	20	101 TICKET INFO	CCTV			X	FIXED CAMERA
CLOSET	1	A	21	102 COUNTING	CCTV			X	FIXED CAMERA
CLOSET	1	A	22	102 COUNTING	CCTV			X	FIXED CAMERA
CLOSET	1	A	23	EXTERIOR NORTH WALL	CCTV			X	FIXED CAMERA
CLOSET	1	A	24	EXTERIOR SOUTH WALL #2	CCTV			X	FIXED CAMERA
CLOSET	1	A	25	OPEN				X	FIXED CAMERA

NOTE: CONTRACTOR TO PROVIDE 48 PORT CATEGORY 6 PATCH PANEL FOR CCTV EXPANSION

1 SECURITY PATCH PANEL SCHEDULE
NTS

GENERAL NOTES

A. REFER TO SHEETS E-001 AND E-002 FOR LEGENDS, ABBREVIATIONS, AND NOTES.

B. EQUIPMENT SHOWN IS GENERIC AND MAY NOT ACCURATELY PORTRAY THE ACTUAL SIZE, CONNECTIONS, QUANTITIES, AND CONFIGURATION OF THE FINAL INSTALLATION.

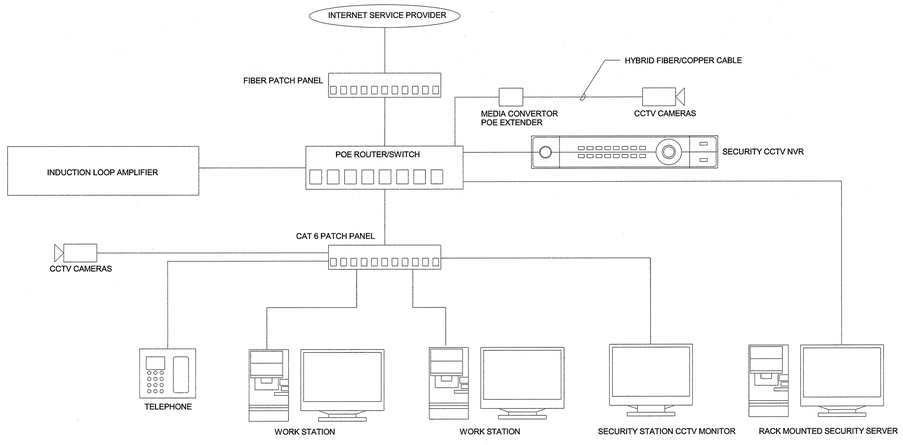

2 TYPICAL POE ETHERNET CONNECTION DIAGRAM
NTS

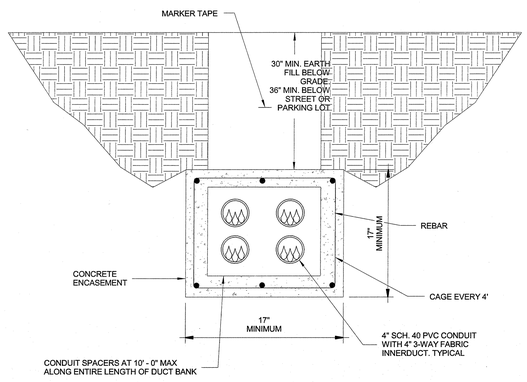

NOTES:

1. COMMUNICATION DUCT BANK SHALL BE CONCRETE ENCASED WHERE RUNNING UNDER AREAS OF VEHICLE TRAFFIC.
2. CONTINUOUS MARKER TAPE SHALL BE INSTALLED ABOVE THE TOP OF THE DUCT BANK AT 12" BELOW GRADE. DUCT BANKS UP TO 24" WIDE SHALL HAVE ONE (1) MARKER TAPE ABOVE THE ENTIRE CENTER LENGTH. DUCT BANKS GREATER THAN 24" WIDE SHALL HAVE TWO (2) OR MORE MARKER TAPES AT 24" APART ABOVE THE ENTIRE CENTER LENGTH.

3 TYPICAL COMMUNICATIONS DUCT BANK DETAIL
NTS

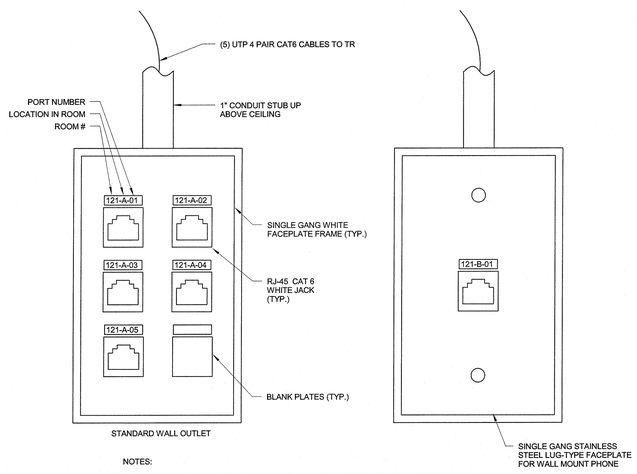

NOTES:

1. GTAC LABELING STANDARDS SHALL BE FOLLOWED FOR ROOM NUMBER, LOCATION IN ROOM (A-Z), AND PORT NUMBER (EXAMPLE: 121-A-01).
2. RJ-45 CONNECTORS IN WALL PLATES SHALL BE WHITE.
3. INSTALL (1) F CONNECTOR AND (1) RJ-45 FOR TV OUTLETS (NOT SHOWN) UON.
4. INSTALL (1) CAT. 6 CABLE AND RJ45 OUTLET FOR EACH WAP AND CCTV CAMERA UNLESS OTHERWISE NOTED.

4 WALL MOUNTED DATA/PHONE OUTLET DETAILS
NTS

Greenville
NORTH CAROLINA

JACOBS
333 Fayetteville Street, Suite 1100
Raleigh, NC 27601
PH: 919-334-3100 FX: 919-334-3122 www.jacobs.com
North Carolina Engineering Firm License No. F-287
North Carolina Architectural Firm Reg. No. 50757

AYERS SAINT GROSS

Consultants:
ARK Consulting Group, PLLC

Coaly Design
Landscape Architecture + Land Planning

Seals:

General Notes:

Project Client:
Owner

GREENVILLE TRANSPORTATION ACTIVITY CENTER
600 S. Pitt Street, Greenville, NC

Number	Description	Date
0	IFC	05.10.2016

Key Plan: Project North

CAD File:
Project No.: L3005900
Copyright: 2015 Jacobs Engineering Group

Drawing Sheet Title:
SYSTEMS DETAILS

Drawing Sheet Number:
SEC-501

Owner's Drawing Sheet No.:

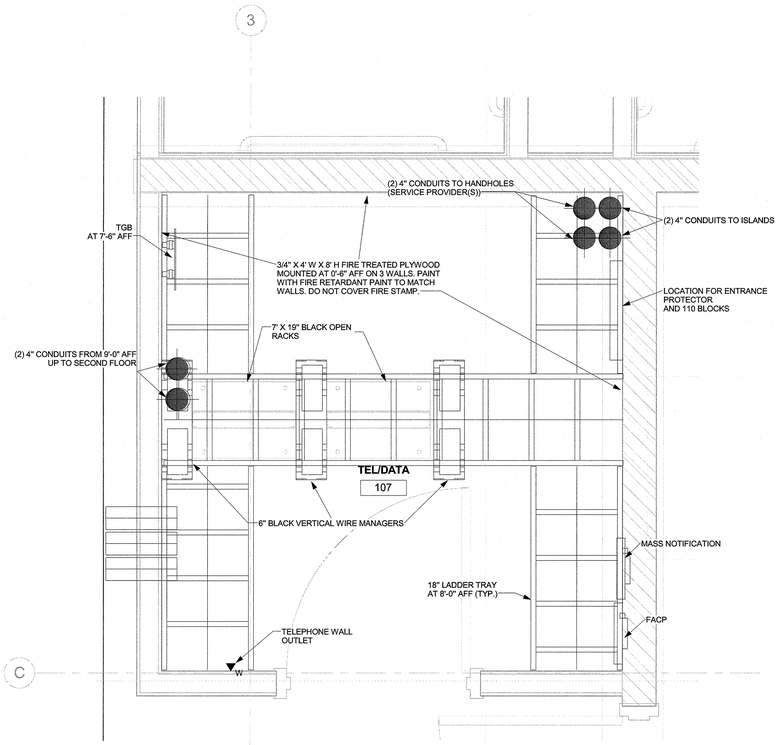

1 Enlarged Plan - Tel/Data Room 107
1" = 1'-0"

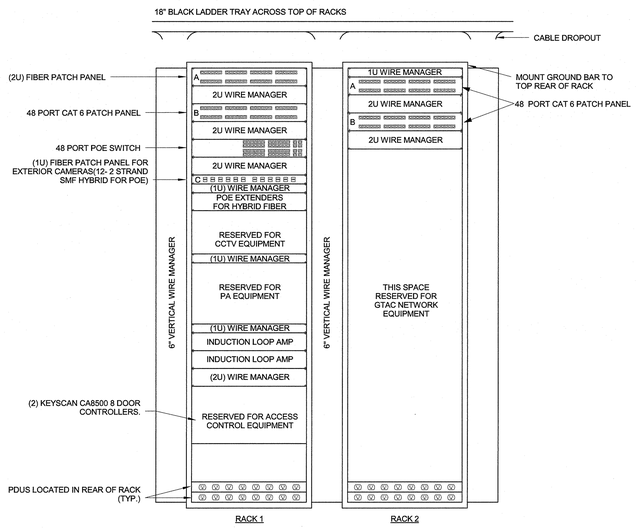

NOTE:
1. CONTRACTOR SHALL ANCHOR RACKS TO FLOOR.
2. CONTRACTOR SHALL SUPPLY AND INSTALL (2) PDUS PER RACK THAT ARE RATED AT 20 AMPS 120VAC EACH.
3. BLACK 2 POST 19" 45U CHATSWORTH RACKS PREFERRED.
4. PATCH PANELS SHALL BE PANDUIT 48 PORT CAT6 PANELS.
5. HORIZONTAL AND VERTICAL CABLE MANAGEMENT SYSTEMS SHALL BE PANDUIT PART NUMBERS WMP1E AND PRV679 RESPECTIVELY.

2 RACK ELEVATION DETAIL
NTS

GENERAL NOTES

A. REFER TO SHEETS E-001 AND E-002 FOR LEGENDS, ABBREVIATIONS, AND NOTES.

B. EQUIPMENT SHOWN IS GENERIC AND MAY NOT ACCURATELY PORTRAY THE ACTUAL SIZE, CONNECTIONS, QUANTITIES, AND CONFIGURATION OF THE FINAL INSTALLATION.

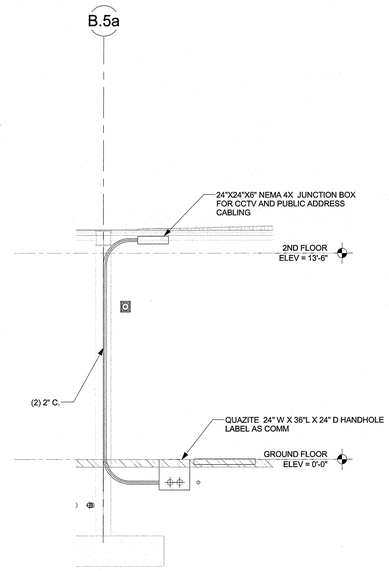

NOTE:
1. PAINT CONDUIT AND NEMA 4X JUNCTION BOX TO MATCH CANOPY.

3 ISLAND CONDUIT SECTION (TYP)
1/4" = 1'-0"

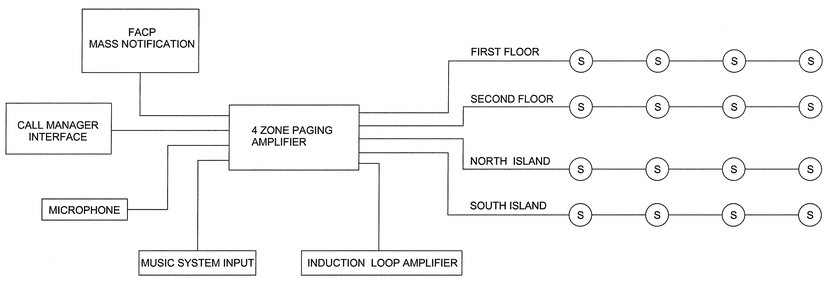

NOTE:
1. INTEGRATE PA SYSTEM WITH VOIP TELEPHONE SYSTEM PROVIDING ACCESS SECURITY CODE WITH GLOBAL AND INDIVIDUAL ZONE ACCESS
2. VERIFY SPEAKER QUANTITIES, TYPES AND LOCATIONS WITH FLOOR PLANS
3. INTEGRATE INDUCTION LOOP AMPLIFIER WITH PAGING SYSTEM

4 PUBLIC ADDRESS SYSTEM
NTS

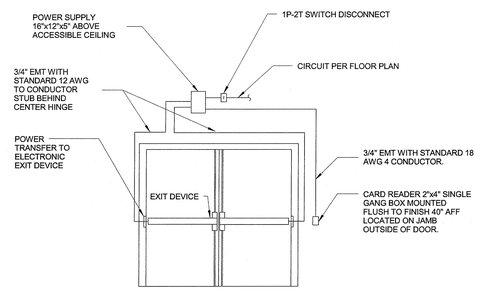

NOTE:
1. COORDINATE ALL LOCATIONS AND CONNECTIONS FOR EQUIPMENT WITH SELECTED ACCESS CONTROL PROVIDER. THE ACCESS CONTROL SYSTEM IS INCLUDED IN O & M FUNDED BID OPTION 15, BUT IF NOT SELECTED, WILL BE PROVIDED AND INSTALLED BY THE GOVERNMENT
2. TCP/IP BASED POE SYSTEMS WILL REQUIRE THE INSTALLATION OF ONE OR TWO TELECOMMUNICATIONS OUTLETS DEPENDING ON MANUFACTURER.

DOUBLE DOOR ACCESS CONTROL
ROUGH-IN
5 NTS

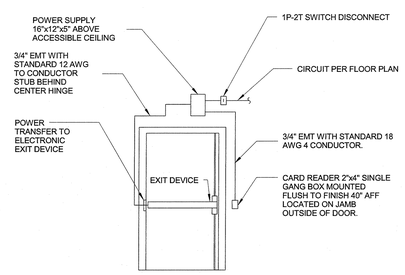

NOTE:
1. COORDINATE ALL LOCATIONS AND CONNECTIONS FOR EQUIPMENT WITH SELECTED ACCESS CONTROL PROVIDER. THE ACCESS CONTROL SYSTEM IS INCLUDED IN O&M-FUNDED BID OPTION 15, BUT IF NOT SELECTED, WILL BE PROVIDED AND INSTALLED BY THE GOVERNMENT.
2. TCP/IP BASED POE SYSTEMS WILL REQUIRE THE INSTALLATION OF ONE OR TWO TELECOMMUNICATIONS OUTLETS DEPENDING ON MANUFACTURER.

SINGLE DOOR ACCESS CONTROL
ROUGH-IN
6 NTS

Greenville
NORTH CAROLINA

JACOBS
333 Fayetteville Street, Suite 1100
Raleigh, NC 27601
PH: 919-334-3100 FX: 919-934-3122 www.jacobs.com
North Carolina Engineering Firm License No. F-287
North Carolina Architectural Firm Reg. No. 50757

AYERS SAINT GROSS

Consultants:
ARK Consulting Group, PLLC

Coaly Design
Landscape Architecture + Land Planning

Seals:

NORTH CAROLINA PROFESSIONAL ENGINEER SEAL 025653 MARK WILLIS

General Notes:

Project Client:
Owner

GREENVILLE
TRANSPORTATION
ACTIVITY CENTER
600 S. Pitt Street, Greenville, NC

Number	Description	Date
0	IFC	05.10.2016

Key Plan: Project North

CAD File:
Project No.: L3005900
Copyright: 2015 Jacobs Engineering Group

Drawing Sheet Title:
SYSTEMS DETAILS

Drawing Sheet Number:
SEC-502

Owner's Drawing Sheet No.:

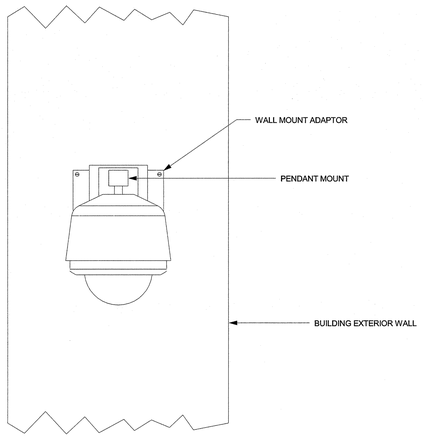

EXTERIOR WALL MOUNT - ELEVATION

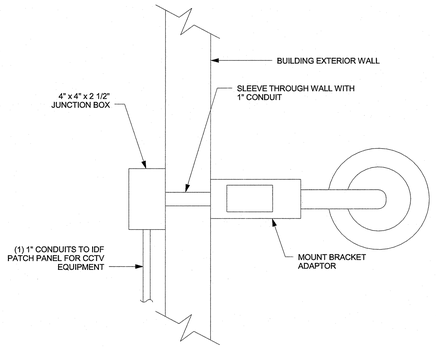

EXTERIOR WALL MOUNT - PLAN VIEW

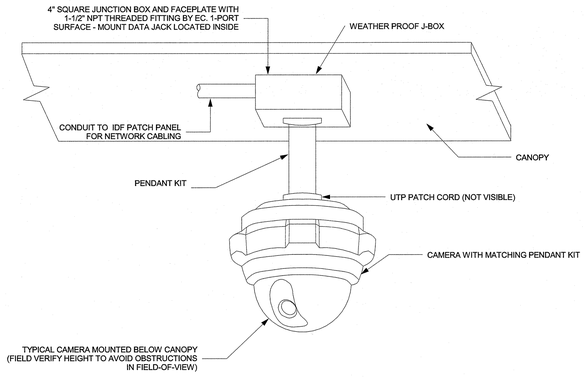

EXTERIOR CAMERA INSTALLATION DETAIL (PENDANT-MOUNT)

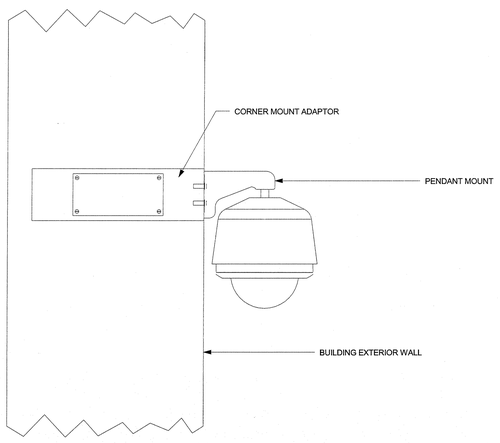

EXTERIOR CORNER MOUNT - ELEVATION

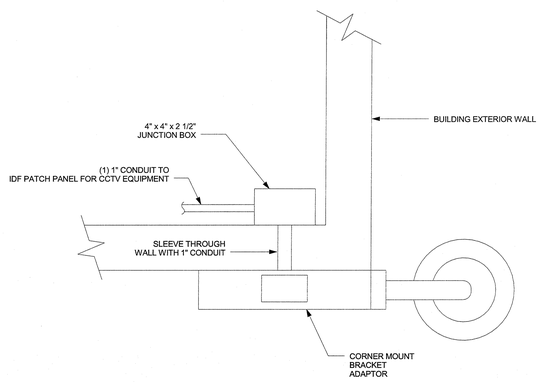

EXTERIOR CORNER MOUNT - PLAN VIEW

1 SECURITY CAMERA DETAILS
NTS

Greenville
NORTH CAROLINA

JACOBS

333 Fayetteville Street, Suite 1100
Raleigh, NC 27601
PH: 919-334-3100 FX: 919-334-3122 www.jacobs.com
North Carolina Engineering Firm License No. F-287
North Carolina Architectural Firm Reg. No. 50757

AYERS SAINT GROSS

Consultants:

ARK Consulting Group, PLLC

Coaly Design
Landscape Architecture + Land Planning

Seals:

NORTH CAROLINA PROFESSIONAL 025653 5-9-16 ENGINEER MARK WILLIS

General Notes:

Project Client:
Owner

GREENVILLE TRANSPORTATION ACTIVITY CENTER
600 S. Pitt Street, Greenville, NC

Number	Description	Date
0	IFC	05.10.2016

Key Plan: Project North

CAD File:
Project No.: L3005900
Copyright: 2015 Jacobs Engineering Group

Drawing Sheet Title:
SECURITY CAMERA DETAILS

Drawing Sheet Number:
SEC-503

Owner's Drawing Sheet No.:

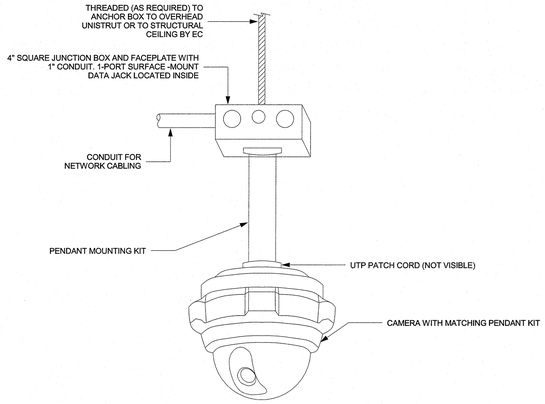

INTERIOR CAMERA INSTALLATION DETAIL (PENDANT-MOUNT)

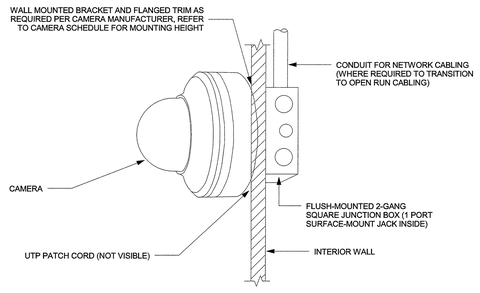

NOTE:

1) CONFIRM MOUNTING HEIGHT AND LOCATION WITH SYSTEM OWNER.
2) CAMERA SHALL BE INDEPENDENTLY FASTENED TO THE WALL USING MANUFACTURER RECOMMENDED MOUTING HARDWARE.

INTERIOR CAMERA INSTALLATION DETAIL (WALL-MOUNT)

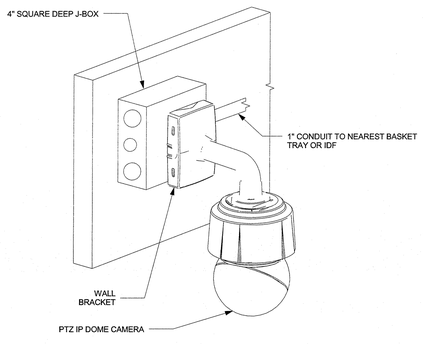

INTERIOR CAMERA INSTALLATION DETAIL (WALL-MOUNT)

CAMERAS AND CONDUIT SHALL BE INDEPENDENTLY SUPPORTED AND SHALL NOT RELY ON CEILING SYSTEM CABLE SUPPORTS, FRAME OR TILES FOR SUPPORT.

WHERE CEILING-MOUNT CAMERAS ARE TO BE INSTALLED ON CEILING TILES, THEY SHALL BE ON THE TILES IN BOTH DIRECTIONS.

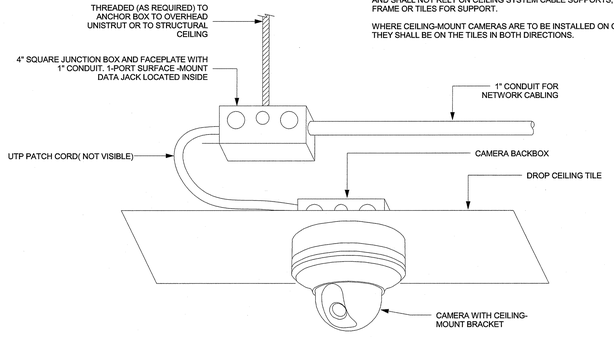

INTERIOR CAMERA INSTALLATION DETAIL (DROP CEILING)

1 SECURITY CAMERA DETAIL
NTS

Greenville
NORTH CAROLINA

JACOBS
333 Fayetteville Street, Suite 1100
Raleigh, NC 27601
PH: 919-334-3100 FX: 919-334-3122 www.jacobs.com
North Carolina Engineering Firm License No. F-287
North Carolina Architectural Firm Reg. No. 50757

AYERS SAINT GROSS

Consultants:
ARK Consulting Group, PLLC

Coaly Design
Landscape Architecture + Land Planning

Seals:

NORTH CAROLINA PROFESSIONAL ENGINEER SEAL 029863 5-9-16 MARK WILLIS

General Notes:

Project Client:
Owner

GREENVILLE TRANSPORTATION ACTIVITY CENTER
600 S. Pitt Street, Greenville, NC

Number	Description	Date
0	IFC	05.10.2016

Key Plan: Project North

CAD File:
Project No.: L3005900
Copyright: 2015 Jacobs Engineering Group

Drawing Sheet Title:
SECURITY CAMERA DETAILS

Drawing Sheet Number:
SEC-504

Owner's Drawing Sheet No.: